VA & VIP Series | Valve + Actuator, Pneumatic Coaxial Valves

The VA and VIP Series combine a pneumatic actuator and valve into one body, eliminating packing glands, actuators and mounting kits. There are no exposed moving parts, eliminating pinch points and increasing operator safety. Since the actuator is part of the valve, costs are greatly reduced when compared to standard actuated valves.

Operating life has been tested to well over 1,000,000 cycles, the balanced design reduces friction and wear. The stroke is linear and parallel to the flow reducing the force to close or open the valve dramatically. The internal waterway design was designed for optimum flow characteristics.

FEATURES

- Integrated pneumatic actuator
- NAMUR solenoid mounting pad
- Compact assembly
- Fast valve actuation
- High CV (flow coefficient)
- High cycle-life
- Competitive price
- Complete accessory equipment

MATERIALS

Body: Nickel Plated Brass
End Connections: NPT or G (BSPP)
Piston: Ni Plated Brass (EN 12164 CW614N)
Main Seat: NBR, EPDM, or Viton®
O-ring & Lip Seals: NBR, EPDM, or Viton®
see page 4 for complete material details

TYPICAL APPLICATIONS

- Air drying equipment
- Pollution control equipment
- Process control applications
- Laundry equipment
- Textile dyeing and drying
- Bottling and dispensing equipment
- Ink and paint dispensing
- Industrial compressors

SIZES & END CONNECTIONS

NPT: 3/8" to 2"
G (BSPP): 3/8" to 2"

MAXIMUM PRESSURE

29 inHg vacuum to 150 PSIG
see Pressure/Temperature Curve

TEMPERATURE RANGE

NBR: -4°F to 176°F
EPDM & Viton®: -4°F to 302°F
see Pressure/Temperature Curve

SPECIAL MODELS

- Prepared for use with Oxygen *(special request - fees apply)*

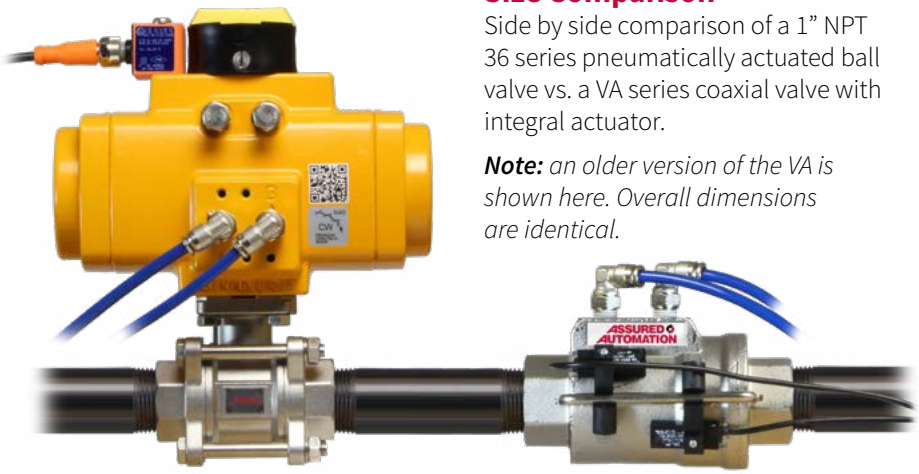

Size Comparison

Side by side comparison of a 1" NPT 36 series pneumatically actuated ball valve vs. a VA series coaxial valve with integral actuator.

Note: *an older version of the VA is shown here. Overall dimensions are identical.*

C_V FACTORS

Size	C_v (Coefficient of Flow [gpm])
3/8"	3
1/2"	7.5
3/4"	12.7
1"	18.1
1 1/4"	28.9
1 1/2"	53.2
2"	67.0

VA & VIP Series

Valve + Actuator, Pneumatic Coaxial Valves

OPERATION

Spring Return - Normally Closed (Air to Open, Spring to Close)

Closed

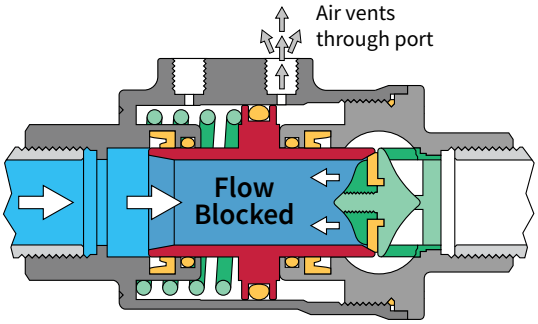

Spring pushes piston onto seat to form a seal and prevent flow

Open

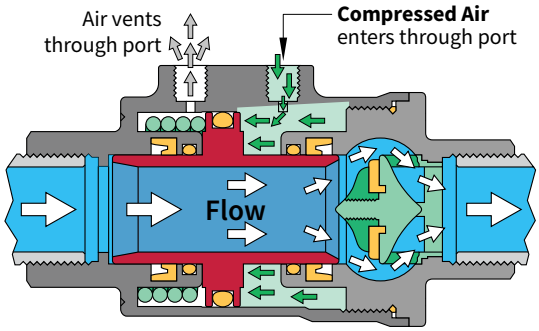

Compressed Air pushes piston away from seat to allow flow to pass

Spring Return - Normally Open (Spring to Open, Air to Close)

Open

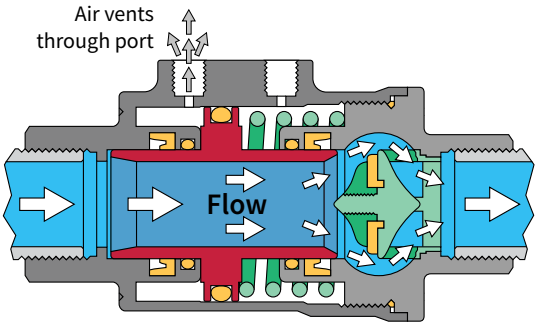

Spring pushes piston away from seat to allow flow to pass

Closed

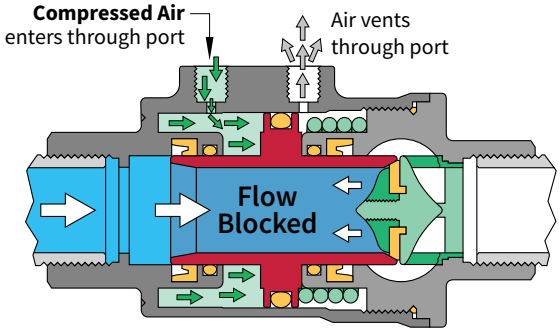

Compressed Air pushes piston away from seat to allow flow to pass

Double Acting (Air to Open, Air to Close)

Closed

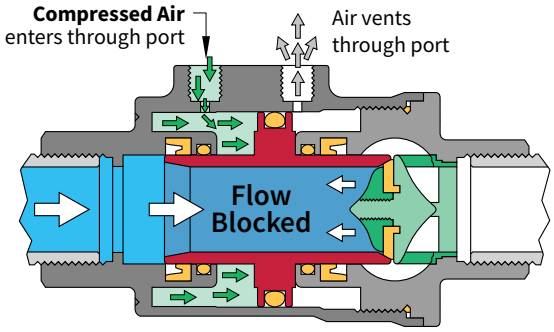

Compressed Air pushes piston onto seat to form a seal and prevent flow

Open

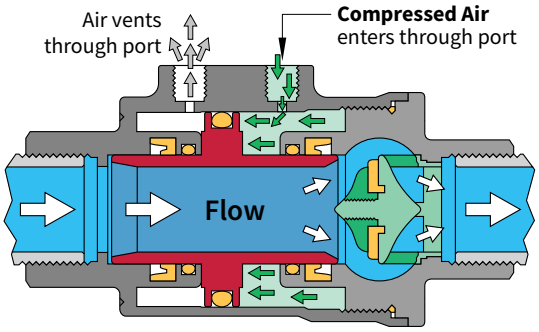

Compressed Air pushes piston away from seat to allow flow to pass

VA & VIP Series

Valve + Actuator, Pneumatic Coaxial Valves

CONSTRUCTION

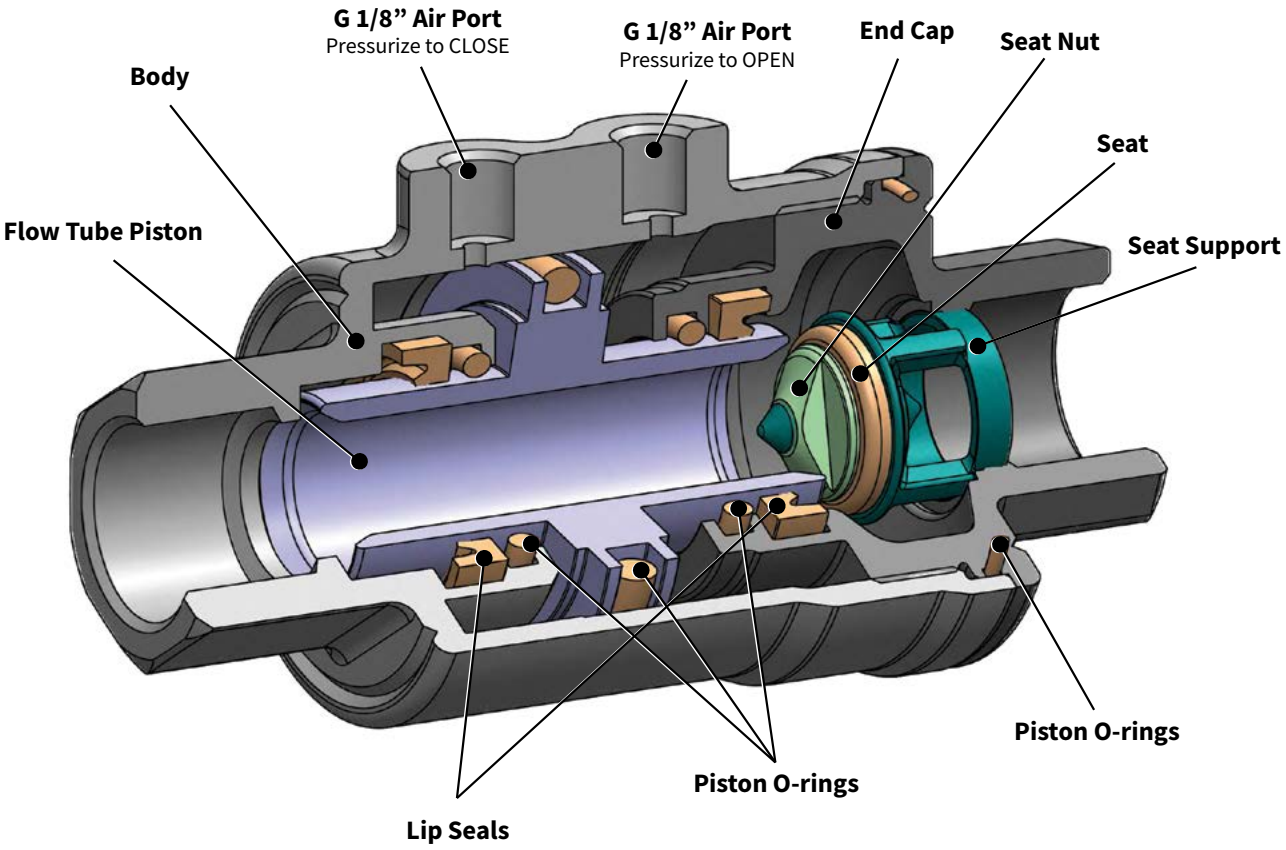

Part / Feature	Description
Valve Body	Compact and streamline Nickel plated brass
End Cap	Screws into valve body to form the 2-piece valve
Flow Tube Piston	Slides back and forth to control flow
Seat Support	Holds seat in place but allows flow around
Seat Seal	Soft seal allows flow tube piston to seat and provide positive shutoff
Seat Nut	Holds seat seal onto seat support
Body O-ring	Seals body to prevent air leakage from valve OPEN actuator chamber
Piston O-rings	Provide secondary seal between flow media and actuator air chambers
Lip Seals	Provide primary seal between flow media and actuator air chambers
NAMUR Mounting Pad	Allows for simple addition of a NAMUR solenoid valve
Air Port (to Close)	G 1/8" port for supply air to actuator CLOSE chamber
Air Port (to Open)	G 1/8" port for supply air to actuator OPEN chamber

VA & VIP Series

Valve + Actuator, Pneumatic Coaxial Valves

MATERIALS

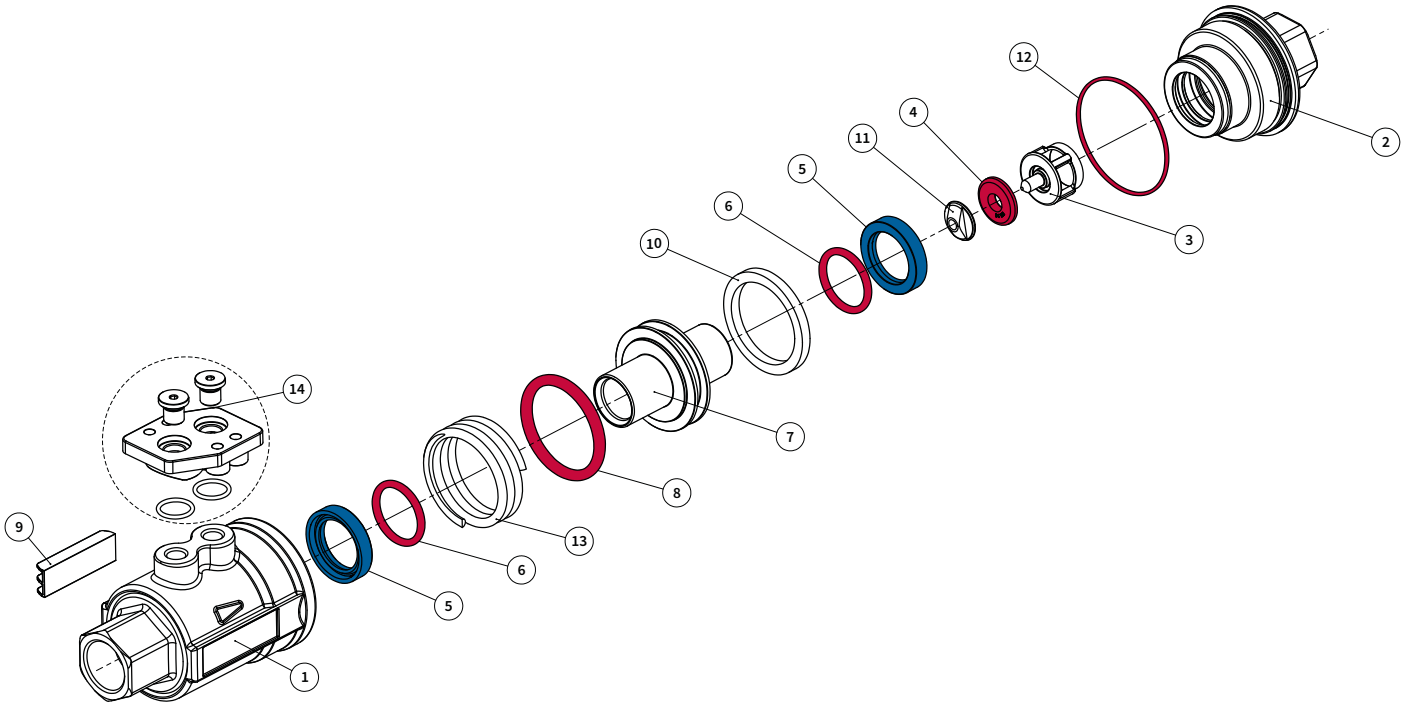

Item	Part	Material	Qty	Wetted	In Repair Kit
1	Valve Body	Nickel Plated Brass (EN 12165 CW617N)	1	X	
2	Outlet End Connection	Nickel Plated Brass (EN 12165 CW617N)	1	X	
3	Seat Support	Nickel Plated Brass (EN 12165 CW617N)	1	X	
4	Seat Seal	NBR, EPDM, or FKM	1	X	X
5	Lip Seals	NBR, EPDM, or FKM	2	X	X
6	O-ring	NBR, EPDM, or FKM	2		X
7	Flow Tube Piston	Nickel Plated Brass (EN 12165 CW617N)	1	X	
8	Piston O-ring	NBR, EPDM, or FKM	1		X
9	Limit Switch Bracket	Polyamide + 30% Glass	1		
10	Magnetic Ring	Plastoferrite	1		
11	Seat Nut	Nickel Plated Brass (EN 12165 CW617N)	1	X	
12	Body O-ring	NBR, EPDM, or FKM	1		X
13	Spring	Stainless Steel	1		
14	NAMUR Plate Kit	????	optional		

REPLACEMENT PARTS

Items in Blue and Red are included in the **Seal Repair Kit**

to order a repair kit visit https://assuredautomation.com/**VA**/?p=parts or https://assuredautomation.com/**VIP**/?p=parts

VA & VIP Series

Valve + Actuator, Pneumatic Coaxial Valves

DIMENSIONS (in mm)

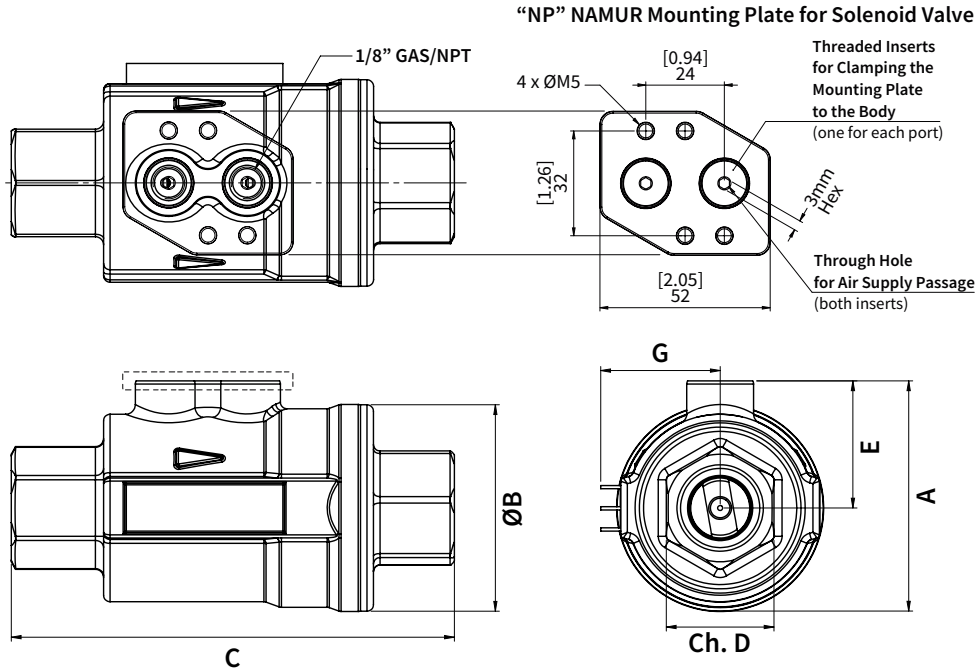

VA Series (NPT Connections)

NPT Size	A (Height)	ØB	C (Length)	E (Height from Pipe Center)	Weight (lbs.)	Stroke Speed (seconds)			
						Spring Return		Double Acting	
						Spring Stroke	Air Stroke	Air to Open	Air to Close
3/8"	54	46	93	31	1.43	0.02	0.01	0.01	0.01
1/2"	69	52	106	33	1.87	0.02	0.01	0.01	0.01
3/4"	71	64	126	39	3.31	0.03	0.02	0.02	0.02
1"	76	69	136	42	3.75	0.04	0.02	0.02	0.02
1 1/4"	91	86	154	48	7.28	0.07	0.04	0.03	0.03
1 1/2"	102	96	171	54	7.94	0.11	0.06	0.06	0.06
2"	114	109	187	60	11.24	0.13	0.07	0.07	0.07

VIP Series (G [BSPP] Connections)

G Size	A (Height)	ØB	C (Length)	E (Height from Pipe Center)	Weight (lbs.)	Stroke Speed (seconds)			
						Spring Return		Double Acting	
						Spring Stroke	Air Stroke	Air to Open	Air to Close
3/8"	54	46	98	31	1.43	0.02	0.01	0.01	0.01
1/2"	69	52	113	33	1.87	0.02	0.01	0.01	0.01
3/4"	71	64	136	39	3.31	0.03	0.02	0.02	0.02
1"	76	69	144	42	3.75	0.04	0.02	0.02	0.02
1 1/4"	91	86	166	48	7.28	0.07	0.04	0.03	0.03
1 1/2"	102	96	181	54	7.94	0.11	0.06	0.06	0.06
2"	114	109	205	60	11.24	0.13	0.07	0.07	0.07

VA & VIP Series

Valve + Actuator, Pneumatic Coaxial Valves

PRESSURE DROP

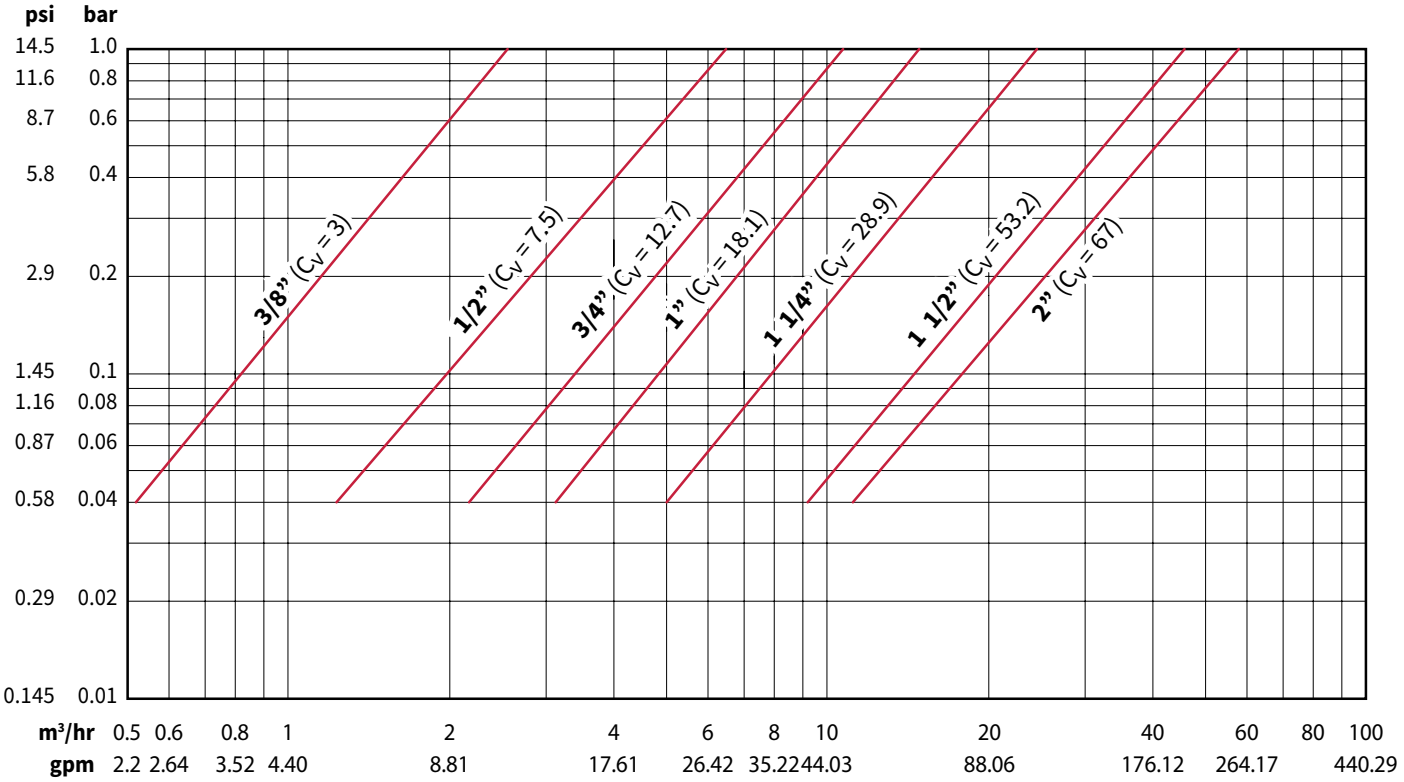

PRESSURE/TEMPERATURE

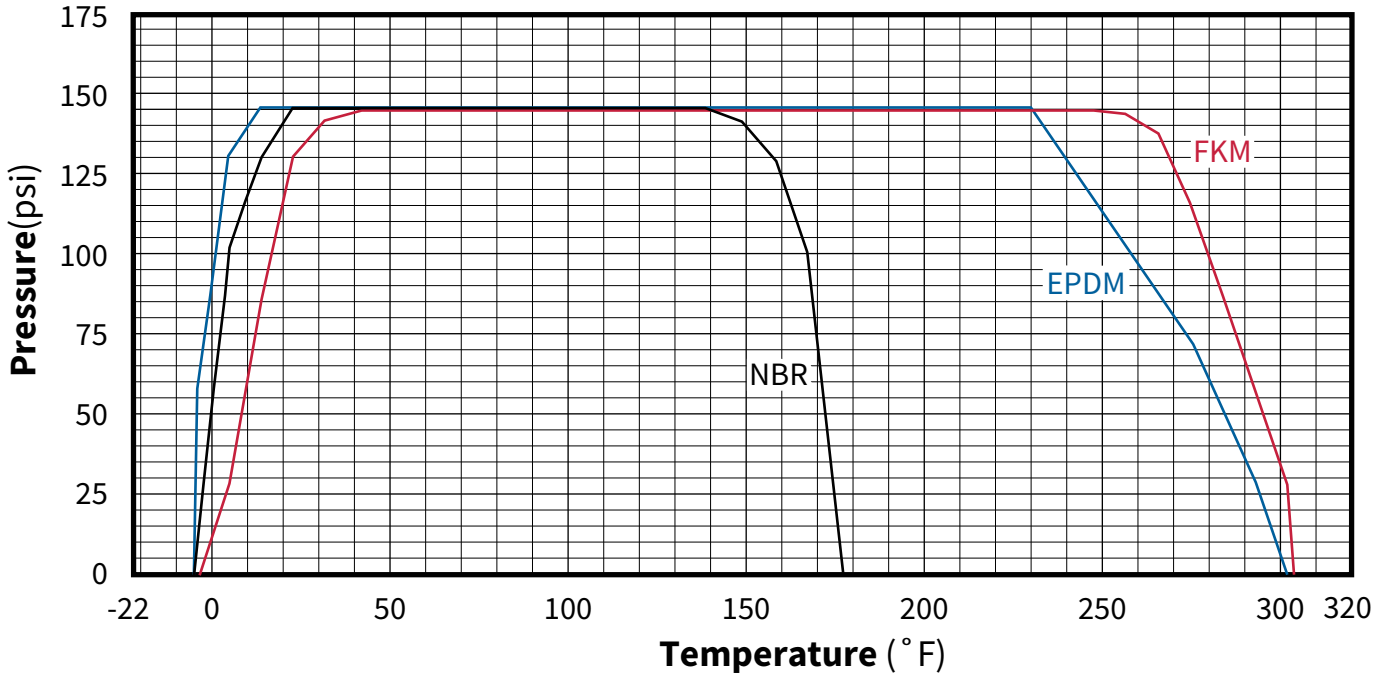

VA & VIP Series

Valve + Actuator, Pneumatic Coaxial Valves

ORDERING INFORMATION

037	VA	C	VV	NPC3B	G2
Size	Series	Actuation Type	Seal Material	Solenoid Valve	Limit Switch

VA (NPT connections)

Size & Connection:

037 = 3/8″ NPT
050 = 1/2″ NPT
075 = 3/4″ NPT
100 = 1″ NPT
125 = 1 1/4″ NPT
150 = 1 1/2″ NPT
200 = 2″ NPT

Actuation Type:

C = Spring to Close (fail closed)
O = Spring to Open (fail open)
D = Double Acting (fail in place)

Seals:

VV = Viton®
BB = BUNA
EE = EPDM

NP	C	3	B
Plate	Type	Coil & Connector	Voltage

ACCESSORIES

NAMUR Solenoid Mounting Pad: *(omit for none)*

(omit) = None
NP = include NAMUR mounting plate

Solenoid Valve: *(NP Plate above required)*

Type:

(omit) = no solenoid
C = 3-way, 2-position (Cv = 0.08)
E = 3/4-way, 2-position (Cv = 0.7) - with manual override

Coil and Electrical Connector:

(omit) = no solenoid
1 = Weatherproof (NEMA 4/4X) potted DIN 1/2″ conduit
2 = Explosion Proof (NEMA 7) 1/2″ conduit
3 = Weatherproof (NEMA 4/4X) DIN cord grip cable gland (PG9)
4 = Weatherproof (NEMA 4/4X) DIN 1/2″ conduit
5 = Weatherproof (NEMA 4/4X) DIN cord set with 6′ cable
6 = Weatherproof (NEMA 4/4X) DIN cord set with 15′ cable

Voltage:

(omit) = no solenoid
A = 120 VAC
B = 24 VDC
C = 220 VAC
E = 24 VAC
F = 12 VDC

Limit Switch:

(omit) = None
G2 = 2 switches, Open and Closed

*Make it **Easy!***
Try Our **Online Configurator** at:
assuredautomation.com
With **Instant Pricing** and you can **Buy Now**

Viton® is a registered trademark of the Dupont Company

VA & VIP Series

Valve + Actuator, Pneumatic Coaxial Valves

ORDERING INFORMATION

V	C0	V	000	43	NPC3B	G2
VIP	Actuation Type	Seals	*reserved*	Size	Solenoid Valve	Limit Switch

VIP (G [BSPP] connections)

Actuation Type:

C0 = Spring to Close (fail closed)
A0 = Spring to Open (fail open)
D0 = Double Acting (fail in place)

Seals:

V = Viton®
B = BUNA
E = EPDM

Special Options:

000 = None
M00 = Magnet for Limit Switch (required at time of order for using limit switch)

Size & Connection:

43 = G 3/8″
44 = G 1/2″
45 = G 3/4″″
46 = G 1″
47 = G 1 1/4″
48 = G 1 1/2″
49 = G 2″

NP	C	3	B
Plate	Type	Coil & Connector	Voltage

ACCESSORIES

NAMUR Solenoid Mounting Pad:

(omit) = None
NP = include NAMUR mounting plate

Solenoid Valve: *(NP Plate above required)*

Type:

(omit) = no solenoid
C = 3-way, 2-position (Cv = 0.08)
E = 3/4-way, 2-position (Cv = 0.7) - with manual override

Coil and Electrical Connector:

(omit) = no solenoid
1 = Weatherproof (NEMA 4/4X) potted DIN 1/2″ conduit
2 = Explosion Proof (NEMA 7) 1/2″ conduit
3 = Weatherproof (NEMA 4/4X) DIN cord grip cable gland (PG9)
4 = Weatherproof (NEMA 4/4X) DIN 1/2″ conduit
5 = Weatherproof (NEMA 4/4X) DIN cord set with 6′ cable
6 = Weatherproof (NEMA 4/4X) DIN cord set with 15′ cable

Voltage:

(omit) = no solenoid
A = 120 VAC
B = 24 VDC
C = 220 VAC
E = 24 VAC
F = 12 VDC

Limit Switch:

(omit) = None
G2 = 2 switches, Open and Closed

*Make it **Easy!***
Try Our **Online Configurator** at:
assuredautomation.com
With **Instant Pricing** and you can **Buy Now**

Viton® is a registered trademark of the Dupont Company

VA & VIP Series

Valve + Actuator, Pneumatic Coaxial Valves

ACCESSORIES

Solenoid Pilot Valves

NAMUR solenoid valves for direct mount to coaxial valve (optional NP mounting plate required). Various coil and connector options are available including weatherproof, explosion proof, corded, NPT conduit, and cable gland.

3-way
for spring return models

3/4-way for
for double acting models

Limit Switches (valve position indicators)

VIP can be provided with inductive limit switch (magnetic contact) and signal LED. Limit switches can be easily mounted in the integrated slots and fixed with a screw.

IMPORTANT! Since the magnets are situated inside the valve, they must be mounted while assembling the VIP and not afterwards. For this reason, in case needed, magnet must be requested at VIP order phase.

The maximum fluid temperature must be lower than the maximum temperature supported by the limit switch.

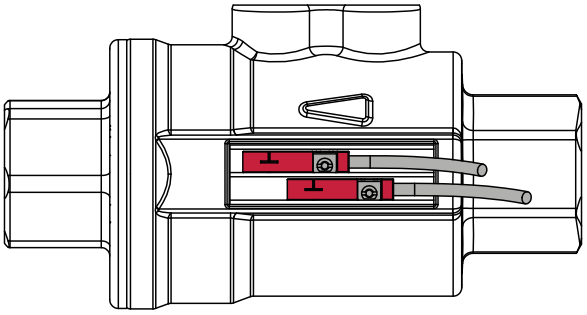

Which switches are we using? REED?

Are they the same as EVO?
I'll need the part number for the configurator

Try our **Easy to Use** Configurators at:

assured**automation**.com