Square flange bearing
UCF/C - HCF/C



- Waterproof housing
- Grub screws or eccentric collar shaft locking
- PAFV polyamide housing
  High mechanical and heat resistance. Proof to dust, humidity, washouts, steam, average aggressive chemical agents.
- Bearings with Food Grade grease



Chrome alloy Steel
Grub screws
shaft locking



Zinc Plated Steel
Eccentric collar
shaft locking



Stainless Steel
Grub screws
shaft locking

Material

PAFV polyamide housing
Housing in reinforced polyamide PAFV resin (black) - Protection cover in polypropylene PP (blue) - Seal and O-Ring in NBR rubber (black) - Ball type nickel plated brass greasing nipple - Reinforcing bushings on mounting holes and washers in stainless steel AISI 304

Continuous operating temperature

in air : - 20 to + 60°C.

Maximum allowed misalignment: 2°.

Bearing



- Superagriseal unit
- Prelubricated with lithium/calcium grease
- Can be relubricated

Loads

Shaft dia. d mm	Bearing load SB - SA: Load coefficient dyn. C N	Bearing load SB - SA: Load coefficient stat. Co N	Bearing load SB - SA: Max. axial load N	Bearing load UC 2RF: Load coefficient dyn. C N	Bearing load UC 2RF: Load coefficient stat. Co N	Bearing load UC 2RF: Max. axial load N	Bearing unit max. static load: PA FV N	Bearing unit max. static load: PA FV N
25	10800	7000	2160	9150	7000	1830	17000	18000
25*	10800	7000	2160	9150	7000	1830	17000	18000
30	15100	10000	3020	12500	10000	2500	17000	18000
35	19900	13700	3980	16600	13700	3320	18000	22000
35*	19900	13700	3980	16600	13700	3320	17000	18000
40	22600	15700	4520	20000	15700	4000	18000	22000
40*	22600	15700	4520	20000	19000	4000	17000	18000
45*	-	-	-	21000	20000	4500	27800	30400
50*	-	-	-	22000	21000	5000	27800	30400

* = Version with special fixing holes

1. Seal.
2. O-Ring.

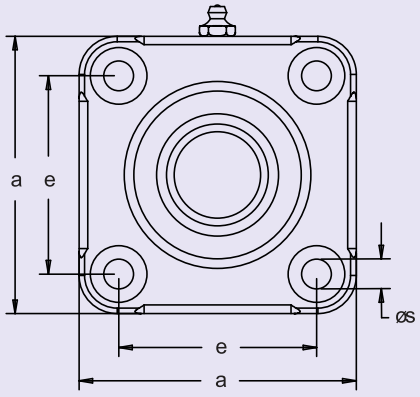

- Series UCF/C
  Bearing SB in Chrome alloy Steel
  Grub screws shaft locking

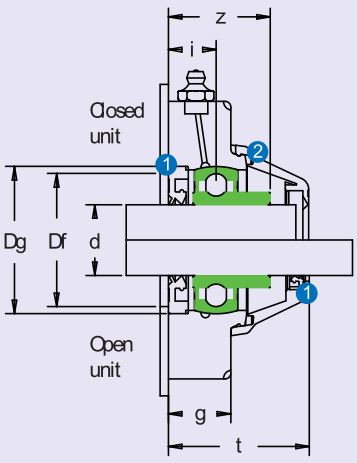

- Series HCF/C
  Bearing SA in Zinc Plated Steel
  Eccentric collar shaft locking

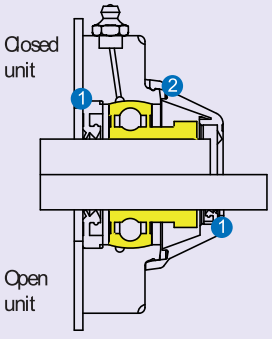

- Series UCF/C
  Bearing UC in Stainless Steel
  Grub screws shaft locking

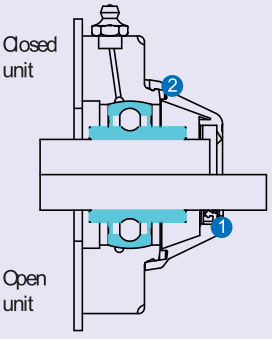

UCF/C - HCF/C

dia. d mm	Series	Housing material: Polyamide PA FV Standard Flange (black) Cover (Blue) Code	Dimensions in mm e	a	s	g	i	Z	t	Dg	Bore in frame[1] Df max.	Df min.	Bearing	Weight Kg	Base unit without seal and cover Code	Spare parts Cover Blue Code
Grub screws shaft locking □ Closed unit																
25	UCF 205 C	674502	70	98	11	22,5	16,8	36,3	49,5	52	50	45	SB 205	0,40	676102	675322
25*	SUCF 205 C	622713	83	110	11	26	19,3	38,8	54	52	50	45	SB 205	0,50	623033	675322
30	UCF 206 C	674512	83	110	11	26	20	41	55	62	60	50	SB 206	0,56	676112	675332
35	UCF 207 C	674522	92	120	11	26	19,5	43	59	72	70	55	SB 207	0,72	676122	675342
35*	SUCF 207 C	600273	83	110	11	26	19,5	43	61	72	70	55	SB 207	0,67	604203	675352
40	UCF 208 C	674532	102	131	11	30	22	47,3	65,5	80	78	65	SB 208	0,95	676132	675352
40*	SUCF 208 C	674542	83	110	11	26	19	44,3	66	80	78	65	SB 208	0,88	676142	675362
Grub screws shaft locking □ Open unit																
25	UCF 205 C	674552	70	98	11	22,5	16,8	36,3	49,5	52	50	45	SB 205	0,40	676102	675372
25*	SUCF 205 C	622723	83	110	11	26	19,3	38,8	54	52	50	45	SB 205	0,50	623033	675372
30	UCF 206 C	674562	83	110	11	26	20	41	55	62	60	50	SB 206	0,56	676112	675382
35	UCF 207 C	674572	92	120	11	26	19,5	43	59	72	70	55	SB 207	0,72	676122	675392
35*	SUCF 207 C	600283	83	110	11	26	19,5	43	61	72	70	55	SB 207	0,67	604203	675482
40	UCF 208 C	674582	102	131	11	30	22	47,3	65,5	80	78	65	SB 208	0,95	676132	675402
40*	SUCF 208 C	674592	83	110	11	26	19	44,3	66	80	78	65	SB 208	0,88	676142	675412
Eccentric collar shaft locking □ Closed unit																
25	HCF 205 C	622733	70	98	11	22,5	16,8	40,3	49,5	52	50	45	SA 205	0,44	623053	675322
25*	SHCF 205 C	622743	83	110	11	26	19,3	42,8	54	52	50	45	SA 205	0,57	623063	675322
30	HCF 206 C	622753	83	110	11	26	20	46,7	55	62	60	50	SA 206	0,63	623073	675332
35	HCF 207 C	622763	92	120	11	26	19,5	48,9	59	72	70	55	SA207	0,90	623083	675342
35*	SHCF 207 C	622773	83	110	11	26	19,5	48,9	61	72	70	55	SA 207	0,85	623093	675352
40*	SHCF 208 C	622783	83	110	11	26	19	51,7	66	80	78	65	SA 208	1,07	623103	675362
Eccentric collar shaft locking □ Open unit																
25	HCF 205 C	622793	70	98	11	22,5	16,8	40,3	49,5	52	50	45	SA 205	0,44	623053	675372
25*	SHCF 205 C	622803	83	110	11	26	19,3	42,8	54	52	50	45	SA 205	0,57	623063	675372
30	HCF 206 C	622813	83	110	11	26	20	46,7	55	62	60	50	SA 206	0,63	623073	675382
35	HCF 207 C	622823	92	120	11	26	19,5	48,9	59	72	70	55	SA 207	0,90	623083	675392
35*	SHCF 207 C	622833	83	110	11	26	19,5	48,9	61	72	70	55	SA 207	0,85	623093	675482
40*	SHCF 208 C	622843	83	110	11	26	19	51,7	66	80	78	65	SA 208	1,07	623103	675412
Grub screws shaft locking □ Version with stainless steel bearing UC 2RF □ Closed unit																
25	UCF 205 C	622853	70	98	11	22,5	16,8	36,6	49,5	52	50	45	UC 205 2RF	0,40	623113	675322
25*	SUCF 205 C	622863	83	110	11	26	19,3	39,1	54	52	50	45	UC 205 2RF	0,50	623123	675322
30	UCF 206 C	622873	83	110	11	26	20	42,2	55	62	60	50	UC 206 2RF	0,56	623133	675332
35	UCF 207 C	622883	92	120	11	26	19,5	45	59	72	70	55	UC 207 2RF	0,72	623143	675342
35*	SUCF 207 C	622893	83	110	11	26	19,5	40,9	61	72	70	55	UC 207 2RF	0,67	623153	675352
40	UCF 208 C	622903	102	131	11	30	22	52,2	65,5	80	78	65	UC 208 2RF	0,95	623163	675352
40*	SUCF 208 C	622913	83	110	11	26	19	52,2	66	80	78	65	UC 208 2RF	0,88	623173	675362
45*	SUCF 209 C	622923	102	131	11	30	23	53,2	73	85	83	75	UC 209 2RF	1,10	623183	623203
50*	SUCF 210 C	622933	102	131	11	30	23	55,6	73	90	88	80	UC 210 2RF	1,20	623193	623203
Grub screws shaft locking □ Version with stainless steel bearing UC 2RF □ Open unit																
25	UCF 205 C	622943	70	98	11	22,5	16,8	36,6	49,5	52	50	45	UC 205 2RF	0,40	623113	675372
25*	SUCF 205 C	622953	83	110	11	26	19,3	39,1	54	52	50	45	UC 205 2RF	0,50	623123	675372
30	UCF 206 C	622963	83	110	11	26	20	42,2	55	62	60	50	UC 206 2RF	0,56	623133	675382
35	UCF 207 C	622973	92	120	11	26	19,5	45	59	72	70	55	UC 207 2RF	0,72	623143	675392
35*	SUCF 207 C	622983	83	110	11	26	19,5	40,9	61	72	70	55	UC 207 2RF	0,67	623153	675482
40	UCF 208 C	622993	102	131	11	30	22	52,2	65,5	80	78	65	UC 208 2RF	0,95	623163	675402
40*	SUCF 208 C	623003	83	110	11	26	19	52,2	66	80	78	65	UC 208 2RF	0,88	623173	675412
45*	SUCF 209 C	623013	102	131	11	30	23	53,2	73	85	83	75	UC 209 2RF	1,10	623183	623213
50*	SUCF 210 C	623023	102	131	11	30	23	55,6	73	90	88	80	UC 210 2RF	1,20	623193	623223

* = Version with special fixing holes

[1] = Dimensions Df max / Df min must be respected to ensure positive retention of the seals and to allow air bleeding during lubrication.

Packaging : 6 pieces.

Note : to obtain the right product code please add B0000 to the digit indicated in the table.

Oval flange bearing

UCFL/C - HCFL/C



- Waterproof housing
- Grub screws or eccentric collar shaft locking
- PAFV polyamide housing
  High mechanical and heat resistance. Proof to dust, humidity, washouts, steam, average aggressive chemical agents.
- Bearings with Food Grade grease



Chrome alloy Steel
Grub screws
shaft locking



Zinc Plated Steel
Eccentric collar
shaft locking



Stainless Steel
Grub screws
shaft locking

Material

PAFV polyamide housing
Housing in reinforced polyamide PAFV resin (black) Protection cover in polypropylene PP (blue) Seal and O-Ring in NBR rubber (black) Ball type nickel plated brass greasing nipple Reinforcing bushings on mounting holes and washers in stainless steel AISI 304

Continuous operating temperature

in air : - 20 to + 60°C.

Maximum allowed misalignment: 2°.

Bearing



- Superagriseal unit
- Prelubricated with lithium/calcium grease
- Can be relubricated

Loads

Shaft dia. d mm	Bearing load SB - SA: Load coefficient dyn. C N	Bearing load SB - SA: Load coefficient stat. Co N	Bearing load SB - SA: Max. axial load N	Bearing load UC 2RF: Load coefficient dyn. C N	Bearing load UC 2RF: Load coefficient stat. Co N	Bearing load UC 2RF: Max. axial load N	Bearing unit max. static load: PA FV N	Bearing unit max. static load: PA FV N
17	7300	3650	1450	-	-	-	8500	8500
20	10000	6200	2000	8300	6200	1660	8500	8500
20*	10000	6200	2000	8300	6200	1660	8500	8500
25	10800	7000	2160	9150	7000	1830	9500	10000
25*	10800	7000	2160	9150	7000	1830	9500	10000
30	15100	10000	3020	12500	10000	2500	13000	12500
30*	15100	10000	3020	12500	10000	2500	13000	12500
30**	15100	10000	3020	12500	10000	2500	13000	12500
35	19900	13700	3980	16600	13700	3320	13000	11500
35*	19900	13700	3980	16600	13700	3320	13000	12500
40	22600	15700	4520	20000	15700	4000	13000	13000
40*	22600	15700	4520	20000	19000	4000	13000	12500

* = Version with special fixing holes

1. Seal.
2. O-Ring.
3. Only for series 206

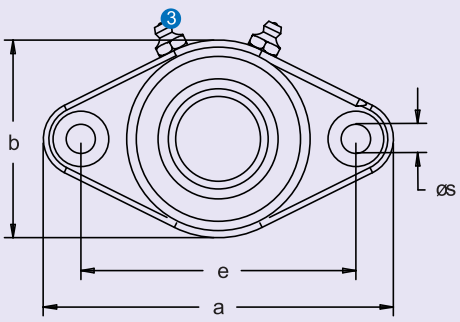

Series UCFL/C
Bearing SB in Chrome alloy Steel
Grub screws shaft locking

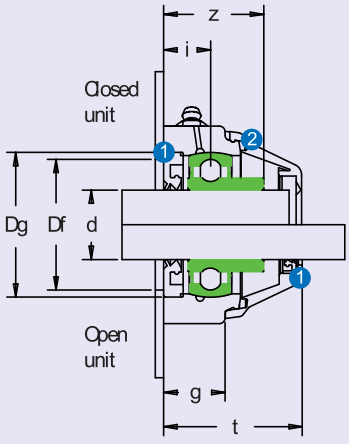

Series HCFL/C
Bearing SA in Zinc Plated Steel
Eccentric collar shaft locking

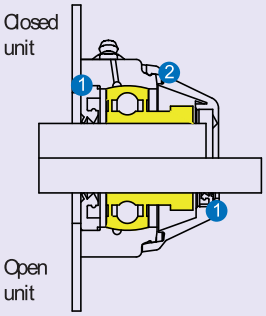

Series UCFL/C
Bearing UC in Stainless Steel
Grub screws shaft locking

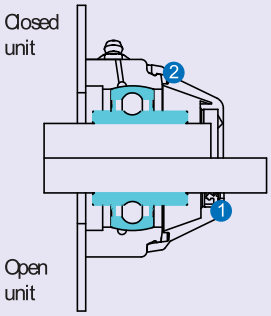

UCFL/C - HCFL/C

dia. d mm	Series	Housing material: Polyamide PA FV Standard Flange (black) Cover (Blue) Code	Dimensions in mm e	a	b	s	g	i	z	t	Dg	Bore in frame[1] Df max.	Df min.	Bearing	Weight Kg	Base unit without seal and cover Code	Spare parts Cover Blue Code
Grub screws shaft locking □Closed unit																	
17	UCFL 203 C	623923	76,5	100	70	11	11	17,5	33,5	49	40	38	33	SB 203	0,22	623983	625563
20	UCFL 204 C	674742	90	116	62	11	20	15,2	33,5	46	47	45	40	SB 204	0,25	676152	675492
20*	SUCFL 204 C	623933	76,5	100	70	11	11	15,2	33,5	49	47	45	40	SB 204	0,25	623993	625563
25	UCFL 205 C	674752	99	130	71	11	22,5	16,8	36,3	49,5	52	50	45	SB 205	0,33	676162	675322
25*	SUCFL 205 C	625623	90	122	85	11	15	16,8	36,3	54	52	50	45	SB 205	0,33	623693	625573
30	UCFL 206 C	674762	117	148	85	11	26	20	41	55	62	60	50	SB 206	0,42	676172	675332
30*	SUCFL 206 C	623233	99	148	85	11	26	20	41	55	62	60	50	SB 206	0,42	621793	675332
30**	SUCFL 206 C	623943	90	122	85	11	15	15	36	54	62	60	50	SB 206	0,40	624003	625573
35	UCFL 207 C	674772	130	162	93	11	26	19,5	45	59	72	70	55	SB 207	0,65	676182	675342
35*	SUCFL 207 C	600253	117	148	112	11	26	19,5	43	62	72	70	55	SB 207	0,70	608173	675352
40	UCFL 208 C	674782	144	176	102	11	30	22	47,3	65,5	80	78	65	SB 208	0,90	676192	675352
40*	SUCFL 208 C	622693	117	148	112	11	26	19	45	62	80	78	65	SB 208	0,74	621883	675352
Grub screws shaft locking □Open unit																	
17	UCFL 203 C	623953	76,5	100	70	11	11	17,5	33,5	49	40	38	33	SB 203	0,22	623983	625583
20	UCFL 204 C	674792	90	116	62	11	20	15,2	33,5	46	47	45	40	SB 204	0,25	676152	675502
20*	SUCFL 204 C	623963	76,5	100	70	11	11	15,2	33,5	49	47	45	40	SB 204	0,25	623993	625593
25	UCFL 205 C	674802	99	130	71	11	22,5	16,8	36,3	49,5	52	50	45	SB 205	0,33	676162	675372
25*	SUCFL 205 C	625643	90	122	85	11	15	16,8	36,3	54	52	50	45	SB 205	0,33	623693	625603
30	UCFL 206 C	674812	117	148	85	11	26	20	41	55	62	60	50	SB 206	0,42	676172	675382
30*	SUCFL 206 C	623243	99	148	85	11	26	20	41	55	62	60	50	SB 206	0,42	621793	675382
30**	SUCFL 206 C	623973	90	122	85	11	15	15	36	54	62	60	50	SB 206	0,40	624003	625613
35	UCFL 207 C	674822	130	162	93	11	26	19,5	45	59	72	70	55	SB 207	0,65	676182	675392
35*	SUCFL 207 C	600263	117	148	112	11	26	19,5	43	62	72	70	55	SB 207	0,70	608173	675482
40	UCFL 208 C	674832	144	176	102	11	30	22	47,3	65,5	80	78	65	SB 208	0,90	676192	675402
40*	SUCFL 208 C	622703	117	148	112	11	26	19	45	62	80	78	65	SB 208	0,74	621883	675402
Eccentric collar shaft locking □Closed unit																	
20	HCFL 204 C	623253	90	116	62	11	20	15,2	38,7	49	47	45	40	SA 204	0,30	623713	675492
20*	SHCFL 204 C	623263	76,5	100	70	11	11	15,2	38,7	49	47	45	40	SA 204	0,30	623723	625563
25	HCFL 205 C	623273	99	130	71	11	22,5	16,8	40,3	49,5	52	50	45	SA 205	0,37	623733	675322
25*	SHCFL 205 C	623283	90	122	85	11	15,5	16,8	40,3	54	52	50	45	SA 205	0,37	623743	625573
30	HCFL 206 C	623293	117	148	85	11	26	20	46,7	55	62	60	50	SA 206	0,49	623753	675332
30*	SHCFL 206 C	623313	99	148	85	11	26	20	46,7	55	62	60	50	SA 206	0,49	623773	675332
30**	SHCFL 206 C	623303	90	122	85	11	15	15	41,5	54	62	60	50	SA 206	0,47	623763	625573
35	HCFL 207 C	623323	130	162	93	11	26	19,5	48,9	59	72	70	55	SA 207	0,83	623783	675342
35*	SHCFL 207 C	623333	117	148	112	11	26	19,5	48,4	62	72	70	55	SA 207	0,88	623793	675352
40	HCLF 208 C	623343	144	176	102	11	30	22	54,7	71	80	78	65	SA 208	1,09	623803	675362
40*	SHCFL 208 C	623353	117	148	112	11	26	19	51,7	68	80	78	65	SA 208	0,93	623813	675362
Eccentric collar shaft locking □Open unit																	
20	HCFL 204 C	623363	90	116	62	11	20	15,2	38,7	49	47	45	40	SA 204	0,30	623713	675502
20*	SHCFL 204 C	623373	76,5	100	70	11	11	15,2	38,7	49	47	45	40	SA 204	0,30	623723	625593
25	HCFL 205 C	623383	99	130	71	11	22,5	16,8	40,3	49,5	52	50	45	SA 205	0,37	623733	675372
25*	SHCFL 205 C	623393	90	122	85	11	15,5	16,8	40,3	54	52	50	45	SA 205	0,37	623743	625603
30	HCFL 206 C	623403	117	148	85	11	26	20	46,7	55	62	60	50	SA 206	0,49	623753	675382
30*	SHCFL 206 C	623423	99	148	85	11	26	20	46,7	55	62	60	50	SA 206	0,49	623773	675382
30**	SHCFL 206 C	623413	90	122	85	11	15	15	41,5	54	62	60	50	SA 206	0,47	623763	625613
35	HCFL 207 C	623433	130	162	93	11	26	19,5	48,9	59	72	70	55	SA 207	0,83	623783	675392
35*	SHCFL 207 C	623443	117	148	112	11	26	19,5	48,4	62	72	70	55	SA 207	0,88	623793	675482
40	HCFL 208 C	623453	144	176	102	11	30	22	54,7	71	80	78	65	SA 208	1,09	623803	675412
40*	SHCFL 208 C	623463	117	148	112	11	26	19	51,7	68	80	78	65	SA 208	0,93	623813	675412
Grub screws shaft locking □Version with stainless steel bearing UC 2RF □Closed unit																	
20	UCFL 204 C	623473	90	116	62	11	20	15,2	33,5	49	47	45	40	UC 204 2RF	0,25	623823	675492
20*	SUCFL 204 C	623483	76,5	100	70	11	11	15,2	33,5	49	47	45	40	UC 204 2RF	0,25	623833	625563
25	UCFL 205 C	623493	99	130	71	11	22,5	16,8	36,5	49,5	52	50	45	UC 205 2RF	0,33	623843	675322
25*	SUCFL 205 C	623503	90	122	85	11	15	16,8	36,5	54	52	50	45	UC 205 2RF	0,33	623853	625573
30	UCFL 206 C	623513	117	148	85	11	26	20	41,2	55	62	60	50	UC 206 2RF	0,42	623863	675332
30*	SUCFL 206 C	623533	99	148	85	11	26	20	41,2	55	62	60	50	UC 206 2RF	0,42	623883	675332
30**	SUCFL 206 C	623523	90	122	85	11	16	15	36	54	62	60	50	UC 206 2RF	0,40	623873	625573
35	UCFL 207 C	623543	130	162	93	11	26	19,5	45	59	72	70	55	UC 207 2RF	0,65	623893	675342
35*	SUCFL 207 C	623553	117	148	112	11	26	19,5	43	62	72	70	55	UC 207 2RF	0,70	623903	675352
40	UCFL 208 C	623563	144	176	102	11	30	23	52	54,7	80	78	65	UC 208 2RF	0,90	617033	675352
40*	SUCFL 208 C	623573	117	148	112	11	26	19	45	68	80	78	65	UC 208 2RF	0,74	623913	675352
Grub screws shaft locking □Version with stainless steel bearing UC 2RF □Open unit																	
20	UCFL 204 C	623583	90	116	62	11	20	15,2	33,5	49	47	45	40	UC 204 2RF	0,25	623823	675502
20*	SUCFL 204 C	623593	76,5	100	70	11	11	15,2	33,5	49	47	45	40	UC 204 2RF	0,25	623833	625593
25	UCFL 205 C	623603	99	130	71	11	22,5	16,8	36,5	49,5	52	50	45	UC 205 2RF	0,33	623843	675372
25*	SUCFL 205 C	623613	90	122	85	11	15	16,8	36,5	54	52	50	45	UC 205 2RF	0,33	623853	625603
30	UCFL 206 C	623623	117	148	85	11	26	20	41,2	55	62	60	50	UC 206 2RF	0,42	623863	675382
30*	SUCFL 206 C	623643	99	148	85	11	26	20	41,2	55	62	60	50	UC 206 2RF	0,42	623883	675382
30**	SUCFL 206 C	623633	90	122	85	11	16	15	36	54	62	60	50	UC 206 2RF	0,40	623873	625613
35	UCFL 207 C	623653	130	162	93	11	26	19,5	45	59	72	70	55	UC 207 2RF	0,65	623893	675392
35*	SUCFL 207 C	623663	117	148	112	11	26	19,5	43	62	72	70	55	UC 207 2RF	0,70	623903	675482
40	UCFL 208 C	623673	144	176	102	11	30	23	52	54,7	80	78	65	UC 208 2RF	0,90	617033	675402
40*	SUCFL 208 C	623683	117	148	112	11	26	19	45	68	80	78	65	UC 208 2RF	0,74	623913	675402

* = Version with special fixing holes

SUCFL206C/SHCFL206C: Assembly with cylindrical head screws

[1] = Dimensions Df max / Df min must be respected to ensure positive retention of the seals and to allow air bleeding during lubrication.

Packaging : 6 pieces.

Note : to obtain the right product code please add B0000 to the digit indicated in the table.