LAGEN1X energy

ACTS40

Instruction Manual



40A - 2 WAY
Automatic AC Transfer Switch

Welcome

Lagenix products are all proudly designed, engineered and manufactured in Australia.

All products are engineered using the latest high quality components and manufactured to stringent quality standards thus ensuring **Lagenix** customers all enjoy many years of reliable operation.

It is important to us at **Lagenix** that our clients enjoy the maximum benefits from our products in a safe and productive environment. We strongly advise that you read through this manual which explains all the modes of operation and relevant safety precautions for your Automatic AC Transfer Switch.

Thank you for purchasing this product.

Basic Operation

UPS EXAMPLE

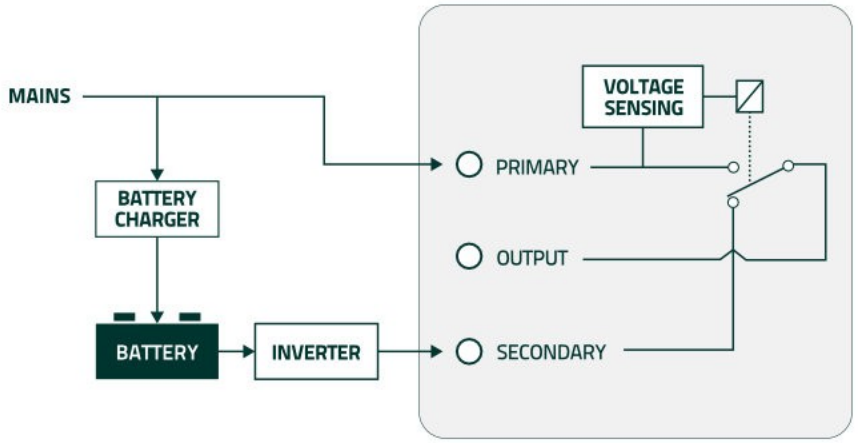

OFF GRID EXAMPLE

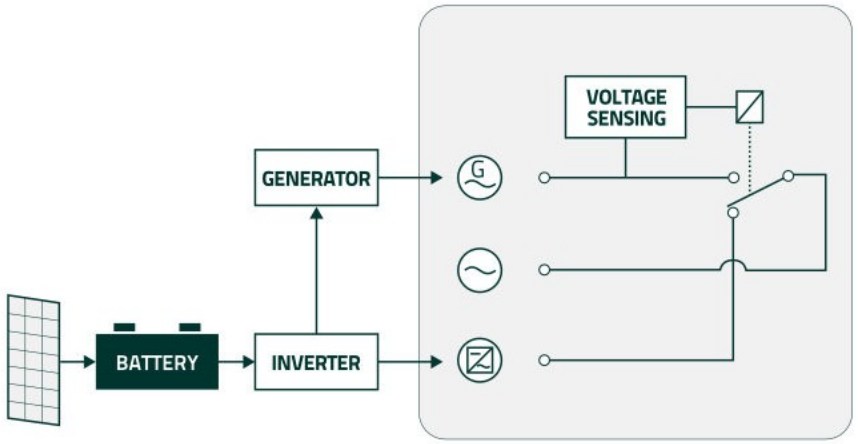

Switching Priorities

The output is connected to the relevant AC input according to the associated priority, i.e. If both sources are present the output would be connected to primary input. When the primary input is disconnected, the output is then connected to the secondary input.

Double Pole Switching

All switching is double pole (switching active and neutral) and complies with marine and mobile wiring standards.

Suitable for use with Computers

The ACTS40 is suitable for use in a UPS system. The switching time is approximately 12ms.

Installation Note

All inputs and outputs must be appropriately fused in accordance to local regulations.

Special Features of the Primary Input

The Primary input has voltage sensing and time delays specifically designed for Generator use. The Generator input voltage must be within the voltage window and there is a time delay to ensure the Generator has warmed up and the voltage is stable before being switched to the output. The voltage is continuously monitored and in the unlikely event it becomes unstable and goes outside the limits, the output will be transferred to the secondary source until the Generator voltage stabilises. These delays and the voltage limits can be changed via the jumper switches located on the transfer switch board. The delay and timer settings are listed on the next page.

Primary

OFF	No power present.
FAST FLASH	AC Voltage out of range.
SLOW FLASH	AC Voltage OK and Delay Timer ON – 1 Flash per second.
ON	Power switched through to Output.

Output/Secondary

OFF	No power present.
ON	Power available

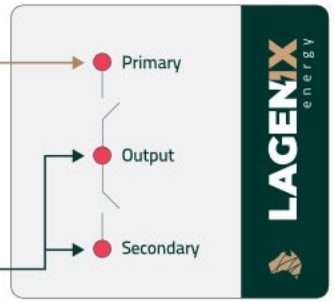

ACTS40 - AUTOMATIC AC TRANSFERSWITCH

Adjustable Settings for Primary Input (+/- 3%)

STANDARD

Jumper	Voltage Window	Time Delay
1	180V - 280V	5 sec
2	210V - 270V	5 sec
3	180V - 280V	30 sec
4	210V - 270V	30 sec

V OPTION

Jumper	Voltage Window	Time Delay
1	90V - 140V	5 sec
2	105V - 135V	5 sec
3	90V - 140V	30 sec
4	105V - 135V	30 sec

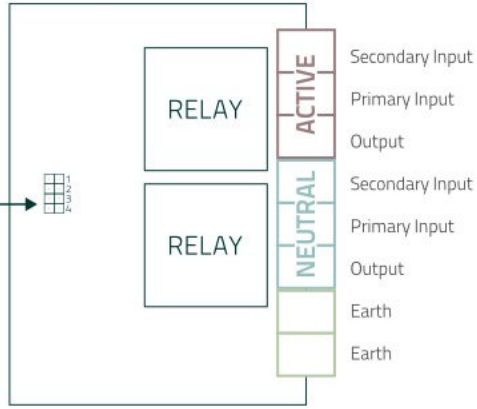

!WARNING!

Due to dangerous voltages, it is important that all AC wiring complies with the relevant wiring standards.

Specifications

Model	ACTS40	ACTS40 - PM
Maximum AC Current	40A	
Number of AC Inputs	2	
Input Voltage +/- 3%		
Standard	180-280 VAC	
V-Option	90-140 VAC	
Operating Temperature	-10° to +50°C	
AC Connections	Screw Terminal Block (Max wire size 20mm²)	
Transfer Time	Approximately 12ms	
Enclosure	Black Flame Retardant ABS, IP66	No Enclosure (Panel Mount)
Standards	AS3100, C-Tick	
Weight	1kg	0.6kg
Dimensions	200mm x 150mm x 100mm	134mm x 122mm x 70mm
Warranty	2 Years	

ACTS40 Dimensions (mm)

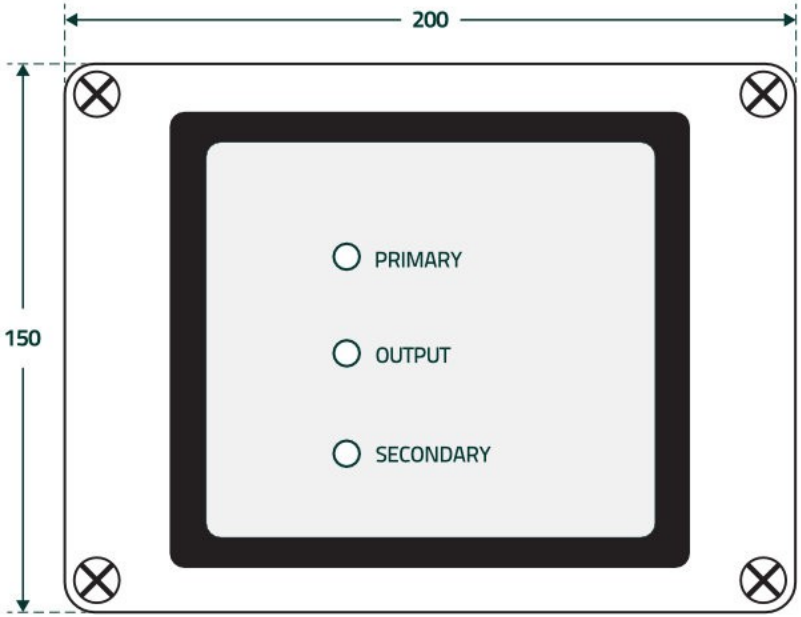

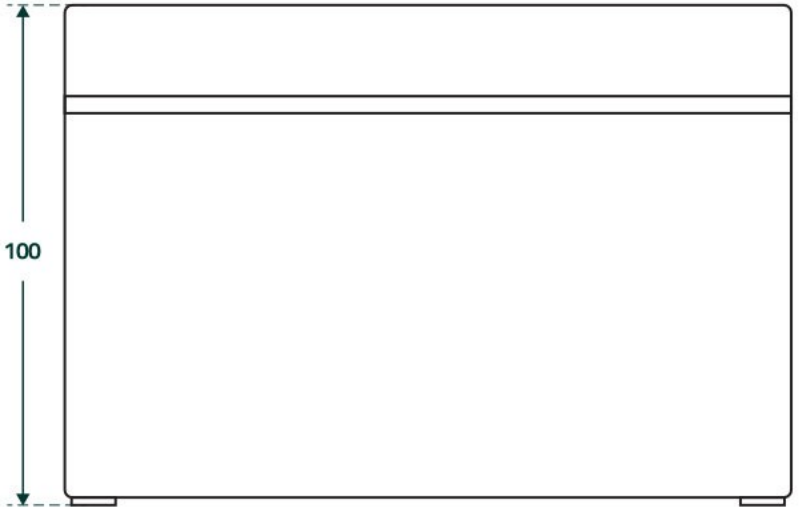

ACTS40-PMDimensions (mm)

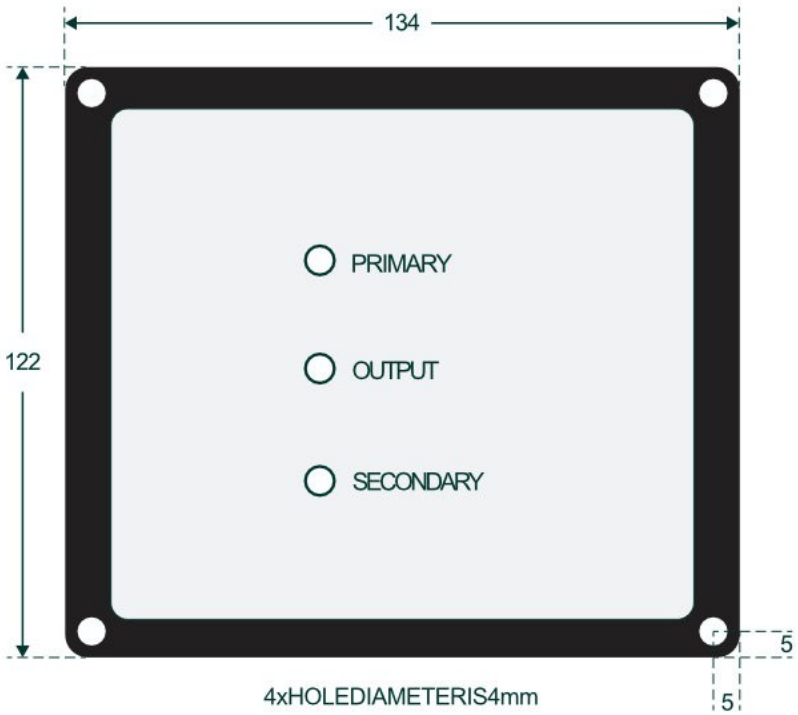

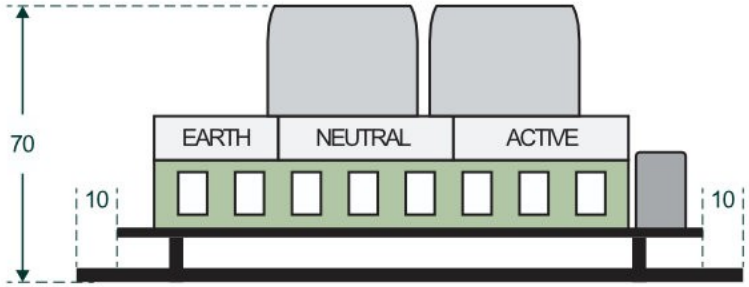

WARRANTYTERMSANDCONDITIONSFORAUSTRALIA

Lagenix Energy ("Lagenix") provides the original purchaser of a Lagenix product (You") with the following Limited Warranties as set out in this warranty certificate, in addition to your rights and remedies under consumer law. The Limited warranty period of this product is 2 years. In all circumstances Lagenix products are guaranteed from the date of purchase.

Part 1 - Warranty Descriptions

Lagenix warrants to You that our products are guaranteed against defects in material or workmanship, when in normal use and service.

1. You must provide proof of purchase.

Lagenix recommends you keep your receipt as proof of purchase, with clear indication of purchase date.

Exclusions:

For the avoidance of doubt, the Lagenix product warranties provided herein do not cover damage, malfunctions or service failures caused by, amongst other things:

- Unauthorized opening of the products, repair, alteration or substitution of non-standard parts; Incorrect design and/or installation of 'balance of system';
- Acts of god, accident or similar cause;
- Failure to follow Lagenix installation, operation or maintenance instructions;
- Abuse, misuse or negligent acts;
- Power failure surges, lightning, fire, flood, pest damage, accidental breakage, actions of third parties and other events or accidents outside Lagenix's reasonable control and not arising from normal operating conditions;
- Suitably qualified personnel not carrying out all AC and DC permanent wiring in accordance with relevant wiring rules.

Products supplied by Lagenix, or Lagenix agents are supplied under the express condition that no responsibility is implied or accepted by Lagenix for any damage to any appliance, equipment or property used in combination with the correct operation of a Lagenix product. All conditions and warranties expressed or implied by statute, common law, equity, trade, custom, usage, or otherwise howsoever are hereby expressly excluded to the maximum extent permitted by law. Where so permitted, the liability of Lagenix for a breach of condition or warranty that cannot be excluded is limited (at Lagenix option) to the replacement or repair of the goods or of acquiring equivalent goods or the cost of replacing or repairing the goods or of acquiring equivalent goods.

Lagenix does not undertake any commitment to guarantee continuity of supply in the case of obsolescence. In addition, Lagenix reserves the rights to change its standard product range or specification of any model subsequently without notice and no liability as a result of these occurrences will be accepted.

Part 2 – Returning a Lagenix product for service under warranty

If service is required contact your local supplier/installer or place of purchase for advice.

To Claim Under Warranty:

1. You should contact the Customer CareCentre at; care@lagenixenergy.com

   Product Model and Serial number need to be supplied to enable prompt processing.

2. If, after investigation, the Customer Care Centre determines the product is or may be defective in material or workmanship and within the warranty period, they will issue instructions on how to proceed with return and shipping to Lagenix.

3. When packaging a Lagenix product for return appropriate measures must be taken by You to ensure the products are safely packed for transit. Products damaged in transit due to inadequate packaging will be void of warranty.

4. If, as a result of further investigation by or on behalf of Lagenix, such a defect is confirmed, then Lagenix must, at its sole election, either repair or replace your Lagenix product. Lagenix will also, at their discretion, determine the most appropriate means to return any Warranty repairs (or replacements) to You in a timely manner.

Part 3 - General Information

Lagenix shall not be liable for any indirect or consequential loss or damage whatsoever, this includes but is not limited to loss of non-generation (whether based on tort or contract or otherwise).

Replacement of any part or labour involved in repairs will not have the effect of extending the original period of the Limited Warranty of the goods. Any faulty part replaced under Limited Warranty becomes the property of the Company for purpose of examination and claim under proprietary warranty.

Under these product warranties, Lagenix is not responsible for and you hereby agree to bear any costs associated with removal, transportation or reinstallation of your Lagenix products or any peripheral components in the balance of any system used in conjunction with Lagenix products. Products returned to Lagenix without prior authorisation will be returned to the sender at their expense.

All Warranty repairs are completed ex-factory to ensure:

- Fast service turn around time
- Specialised, factory trained technicians
- All required components are available (except in the case of obsolescence)
- Thorough testing to all Lagenix specifications Dedicated test equipment Upgrades/updates to latest Lagenix standards/specifications, where applicable
- Dedicated test equipment
- Upgrades/updates to latest Lagenics standards/specifications (where applicable).

Our goods come with guarantees that cannot be excluded under the Australian Consumer Law. You are entitled to a replacement or refund for a major failure and compensation for any other reasonably foreseeable loss or damage. You are also entitled to have the goods repaired or replaced if the goods fail to be of acceptable quality and the failure does not amount to a major failure.