Product data sheet

Specifications

IO analog module, Modicon TM3, 4 inputs, 2 output, screw, 24V DC

TM3AM6

Product availability: Stock - Normally stocked in distribution facility

Main

Range of Product	Modicon TM3
Product or Component Type	Input/output analog module
Range Compatibility	Modicon M221 Modicon M241 Modicon M251 Modicon M262
Analogue input number	4
Analogue output number	2

Complementary

Analogue input type	Current 4...20 mA Current 0...20 mA Voltage 0...10 V Voltage - 10...10 V
Analogue input resolution	12 bits 11 bits + sign
Permissible continuous overload	13 V voltage 40 mA current
Stabilisation time	1 ms
Input impedance	<= 50 Ohm >= 1 MOhm
Sampling duration	1 ms
Analogue output type	Current 4...20 mA Current 0...20 mA Voltage 0...10 V Voltage - 10...10 V
Conversion time	1 ms + 1 ms per channel + 1 controller cycle time
Absolute accuracy error	+/- 1 % of full scale +/- 0.2 % of full scale at 77 °F (25 °C)
Repeat accuracy	+/-0.5 %FS input
Output ripple	20 mV
Cross talk	<= 1 LSB
Type of cable	Twisted shielded pairs cable <98.4 ft (30 m) input/output
Electrical connection	10 x 1.5 mm² removable spring terminal block with pitch 3.81 mm adjustment for inputs and supply 10 x 1.5 mm² removable spring terminal block with pitch 3.81 mm adjustment for inputs
LSB value	2.44 mV, 0...10 V 4.88 mV, - 10...10 V 4.88 µA, 0...20 mA 3.91 µA, 4...20 mA

Price is “List Price” and may be subject to a trade discount – check with your local distributor or retailer for actual price.

Disclaimer: This documentation is not intended as a substitute for and is not to be used for determining suitability or reliability of these products for specific user applications

Insulation	Between input and supply 1500 V AC Between input and internal logic 500 V AC Between output and supply 1500 V AC Between output and internal logic 500 V AC
Immunity to microbreaks	10 ms
Load impedance ohmic	1 kOhm voltage 300 Ohm current
load type	Resistive
Temperature drift	+/- 0.01 %FS/°C
Non-linearity	+/- 0.2 %FS
Typical current consumption	45 mA 5 V DC no load 55 mA 5 V DC full load 55 mA 24 V DC no load 100 mA 24 V DC full load
Local signalling	1 LED green PWR
Mounting support	Top hat type TH35-15 rail IEC 60715 Top hat type TH35-7.5 rail IEC 60715 plate or panel with fixing kit
Height	3.5 in (90 mm)
Width	0.9 in (23.6 mm)
Depth	2.8 in (70 mm)
Product Weight	0.24 lb(US) (0.11 kg)

Environment

IP Degree of Protection	IP20
Marking	CE
Product certifications	CE UKCA RCM EAC CULus CULus HazLoc
Standards	IEC 61131-2
Electromagnetic emission	Radiated emissions 40 dBµV/m QP class A 10 m)30…230 MHz IEC 55011 Radiated emissions 47 dBµV/m QP class A 10 m)230…1000 MHz IEC 55011
Ambient air temperature for operation	14…131 °F (-10…55 °C) horizontal installation) 14…95 °F (-10…35 °C) vertical installation)
Ambient air temperature for storage	-13…158 °F (-25…70 °C)
Relative humidity	10…95 % without condensation
Operating altitude	0...6561.68 ft (0...2000 m)
Pollution degree	2
Vibration resistance	3.5 mm 5…8.4 Hz) on DIN rail 3 gn 8.4…150 Hz) on DIN rail
Shock resistance	15 gn 11 ms

Ordering and shipping details

Category	US10MSX22533
Discount Schedule	0MSX
GTIN	3606480648946

Returnability	Yes
Country of origin	JP

Packing Units

Unit Type of Package 1	PCE
Nbr. of units in pkg.	1
Package 1 Height	2.953 in (7.500 cm)
Package 1 Width	4.134 in (10.500 cm)
Package 1 Length	4.921 in (12.500 cm)
Package weight(Lbs)	6.772 oz (192.000 g)
Unit Type of Package 2	S04
Number of Units in Package 2	42
Package 2 Height	11.811 in (30.000 cm)
Package 2 Width	15.748 in (40.000 cm)
Package 2 Length	23.622 in (60.000 cm)
Package 2 Weight	20.353 lb(US) (9.232 kg)

Contractual warranty

Warranty (in months)	18

Environmental Data

Schneider Electric aims to achieve Net Zero status by 2050 through supply chain partnerships, lower impact materials, and circularity via our ongoing “Use Better, Use Longer, Use Again” campaign to extend product lifetimes and recyclability.

Environmental Data explained

How we assess product sustainability

Environmental footprint

Total lifecycle Carbon footprint	**64 kg CO2 eq.**
Carbon footprint of the manufacturing phase [A1 to A3]	**14 kg CO2 eq.**
Carbon footprint of the distribution phase [A4]	**0 kg CO2 eq.**
Carbon footprint of the installation phase [A5]	**0 kg CO2 eq.**
Carbon footprint of the use phase [B2, B3, B4, B6]	**50 kg CO2 eq.**
Carbon footprint of the end-of-life phase [C1 to C4]	**0.5 kg CO2 eq.**
Environmental Disclosure	Product Environmental Profile

Use Better

Materials and Substances

Packaging made with recycled cardboard	**Yes**
Packaging without single use plastic	**Yes**
SCIP Number	**3b9533ee-f829-495f-9b87-8bb0822090f1**
EU RoHS Directive	Compliant
REACh Regulation	Reference contains Substances of Very High Concern above the threshold
California proposition 65	**WARNING: This product can expose you to chemicals including: Lead and lead compounds, which is known to the State of California to cause cancer and birth defects or other reproductive harm. For more information go to www.P65Warnings.ca.gov**
PVC free	**Yes**

Use Longer

Lifetime extension

Repair	**No**

Use Again

Repack and remanufacture

Recyclability potential, in %	**3**
Circularity Profile	End of Life Information
Take-back	**No**
WEEE Label	**The product must be disposed on European Union markets following specific waste collection and never end up in rubbish bins.**

Dimensions Drawings

Dimensions

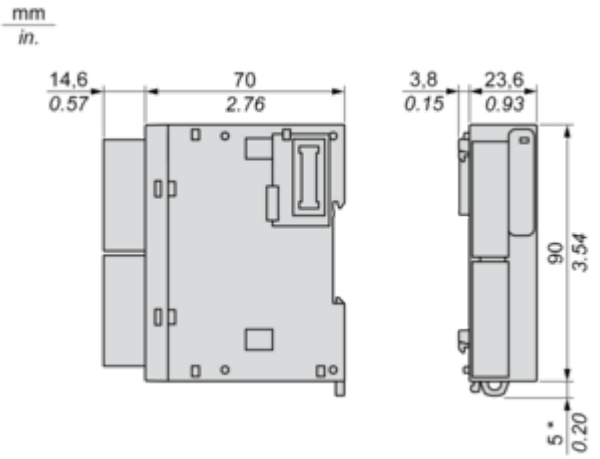

(*) 8.5 mm/0.33 in when the clamp is pulled out.

Mounting and Clearance

Spacing Requirements

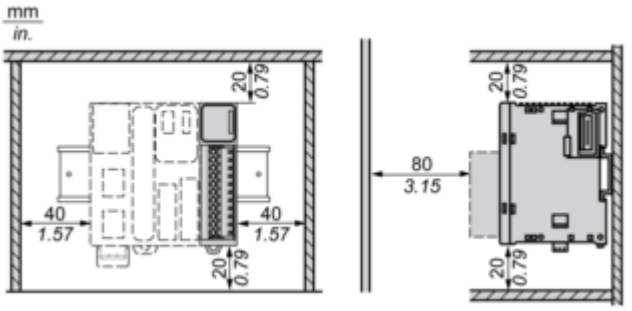

Mounting on a Rail

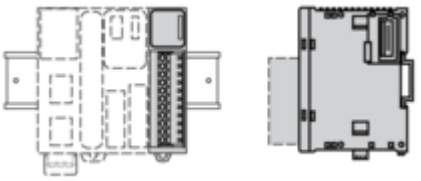

Incorrect Mounting

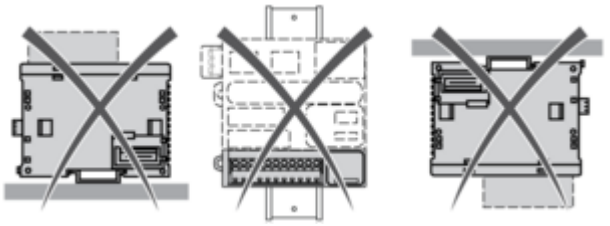

Mounting on a Panel Surface

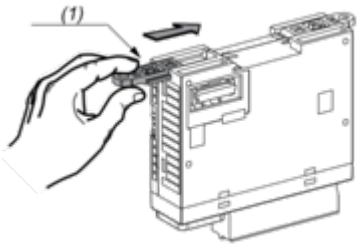

(1) Install a mounting strip

Mounting Hole Layout

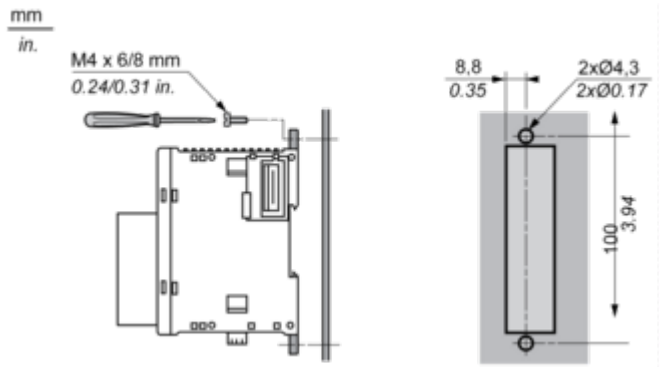

Connections and Schema

Analogue Mixed I/O Module

Wiring Diagram (Current / Voltage)

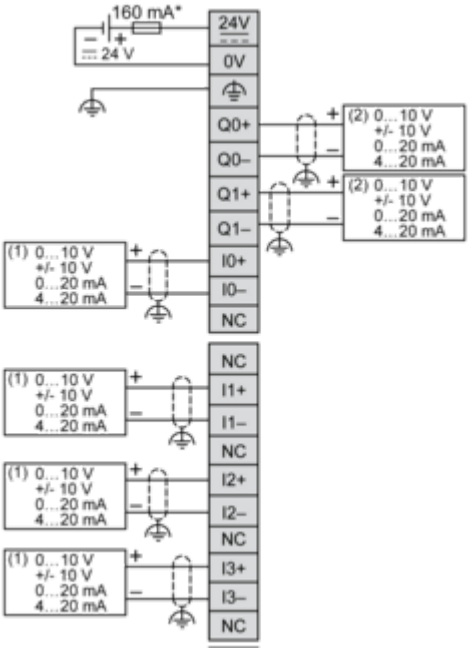

(*) Type T fuse
(1) Current/Voltage analog output device
(2) Current/Voltage analog input device