F.R.L. Air Control Unit

FRL89 / C89 CE



F89



R89



L89



FR89



FRL89



FRL834H



C89

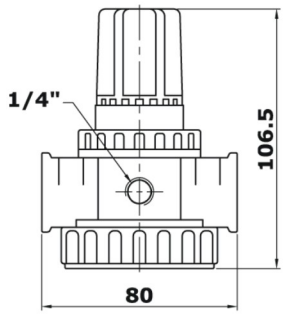

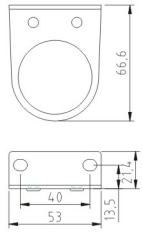

R5017

89 Series Drawing

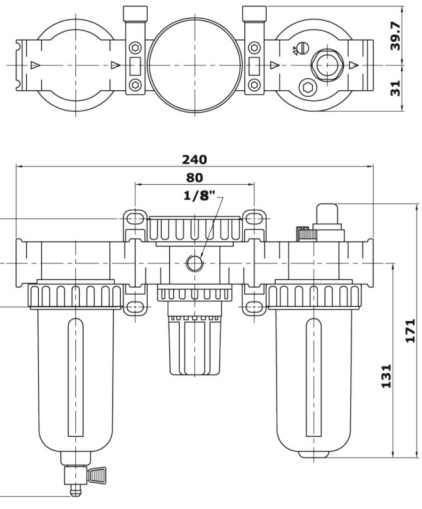

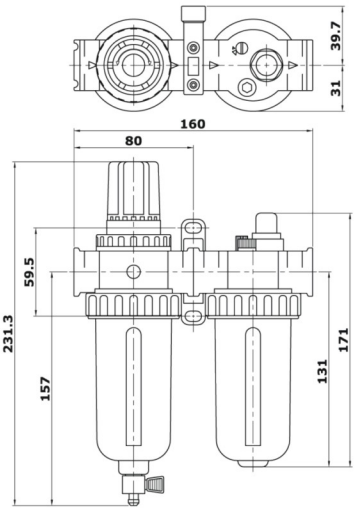

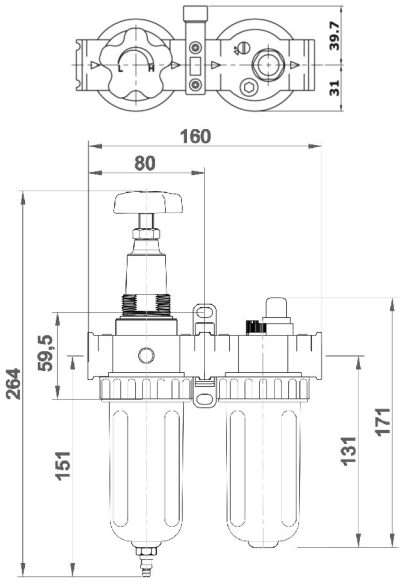

F.R.L. Air Control Unit

SPECIFICATION :

Description \ Part No.		C892 / FRL892	C893 / FRL893	C894 / FRL894	C832 / FRL832	C833 / FRL833	C834 / FRL834	FRL834H
Medium		Air						
Air Inlet (PT.NPT)		1/4"	3/8"	1 /2"	1/4"	3/8"	1 /2"	1 /2"
Filter Element		5μ						
Operating Pressure Range	Semi-Auto Drain Valve	(29 PSI / 2 Bar / 0.2 Mpa) ~ (160 PSI / 11Bar/ 1.1Mpa)			(29 PSI / 2 Bar / 0.2 Mpa) ~ (230 PSI / 16 Bar / 1.6 Mpa)			
	Auto Drain Valve	(43PSI / 3Bar / 0.3Mpa) ~ (160 PSI / 11Bar /1.1Mpa)			(43 PSI / 3 Bar / 0.3 Mpa) ~ (175 PSI / 12Bar / 1.2Mpa)			(43 PSI / 3 Bar/ 0.3 Mpa) ~ (175 PSI / 12Bar / 1.2 Mpa)
	Manual Drain Valve	(0 PSI / 0 Bar / 0 Mpa) ~ (160 PSI / 11Bar / 1.1Mpa)			(0 PSI / 0 Bar / 0 Mpa) ~ (230 PSI / 16 Bar / 1.6 Mpa)			(0 PSI / 0 Bar / 0 Mpa) ~ (230 PSI / 16 Bar / 1.6 Mpa)
Max Flow(L/min)		1750	2500	3000	1750	2500	3000	3000
Operation Temperature Range		5 ~ 60 ℃						
Drain Capacity		Semi-Auto Drain Valve & Manual Drain Valve: 80 ml / Auto Drain Valve : 23 ml						
Oil Capacity		150ml						
Minimum Dripping Flow Rate (L/min(ANR))*		1/4":30 3/8":40 1/2":50						
Recommendable Lubricants		ISO VG-32						
More Options								
Air Filter		F892	F893	F894	F832	F833	F834	
Regulator		R892	R893	R894	R832	R833	R834	
Air Filter+Regulator		FR892	FR893	FR894	FR832	FR833	FR834	
Lubricator		L892	L893	L894	L832	L833	L834	

* The flow rate is 5 drops or greater/min under the following conditions : Inlet pressure of 0.5 MPa; Class 1 turbine oil (ISO VG32); Temperature at 20°C; Oil adjustment valve fully open.
* For a circuit that repeatedly turns ON and OFF on the outlet side, make the adjustment so that the average air consumption per minute becomes the minimum dripping flow rate or more.
*Lubrication cannot be properly performed if the operating flow rate is too low. Select an appropriately size lubricator by referring to the minimum dripping flow rate provided in the catalog.

FEATURES :

1. Steel guards offer better protection
2. Easy to install and disassembly

ORDER INFORMATION :

FRL 89 3 - A
- A: AUTO DRAINAGE (OPTOIN)
- 3: PORT SIZE 2-1/4" 3-3/8" 4-1/2"
- 89: TYPE SERIES
- FRL: F/R.L. COMBINATION

C 89 3 - A
- A: AUTO DRAINAGE (OPTOIN)
- 3: PORT SIZE 2-1/4" 3-3/8" 4-1/2"
- 89: TYPE SERIES
- C: F/R.L. COMBINATION

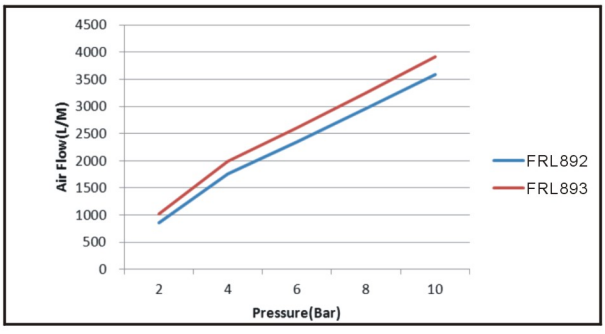

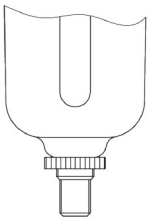

Auto Drain Valve
1/8"PT Male thread

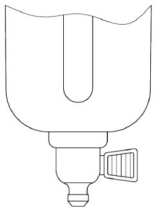

Semi-Auto Drain Valve
Adaptation ID 6.5mm or 1/4" hose

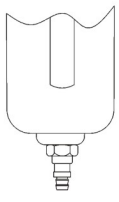

Manual Drain Valve
Adaptation ID 5mm or 3/16" hose