40.5KV EXTENSION SPRING FLAT CONTACT SERIES

Model No.: LYA301 GC8–630A Flat contact with 12 sheets
Contact plate thickness: 10mm Insertion depth:34±2mm

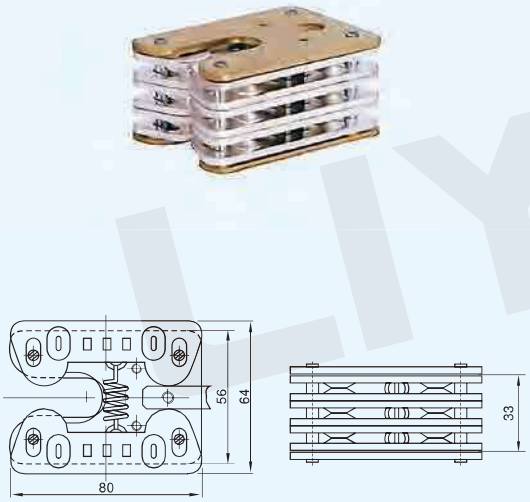

Model No.: LYA302 GC8–1000A Flat contact with 20 sheets
Contact plate thickness: 10mm Insertion depth:34±2mm

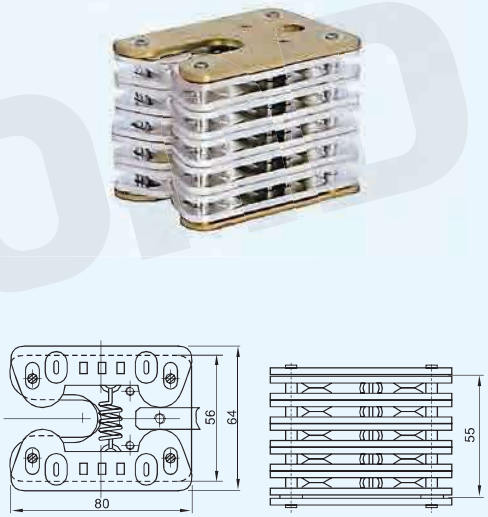

Model No.: LYA303 GC8–1250A Flat contact with 24 sheets
Contact plate thickness: 10mm Insertion depth:34±2mm

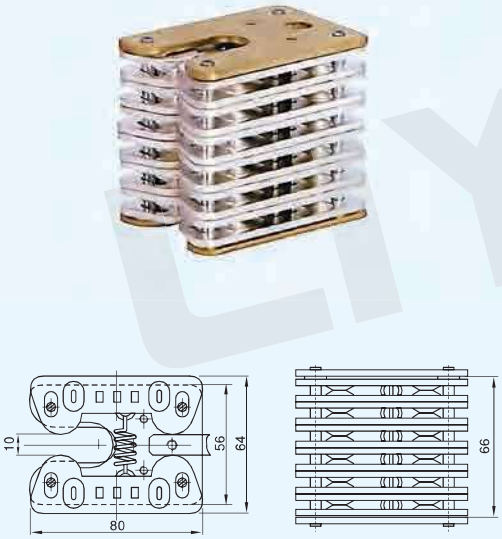

Model No.: LYA304 GC8–1600A Flat contact with 32 sheets
Contact plate thickness: 10mm Insertion depth:34±2mm



12KU EXTENSION SPRING FLAT CONTACT SERIES

Model No.: LYA401 GC6-400A Flat contact with 8 sheets
Contact plate thickness: 6mm Insertion depth:22±2mm

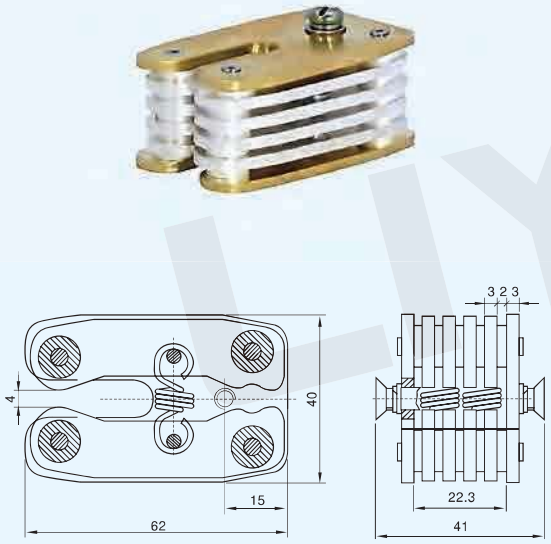

Model No.: LYA402 GC6-400A Flat contact with 8 sheets
Contact plate thickness: 10mm Insertion depth:34±2mm

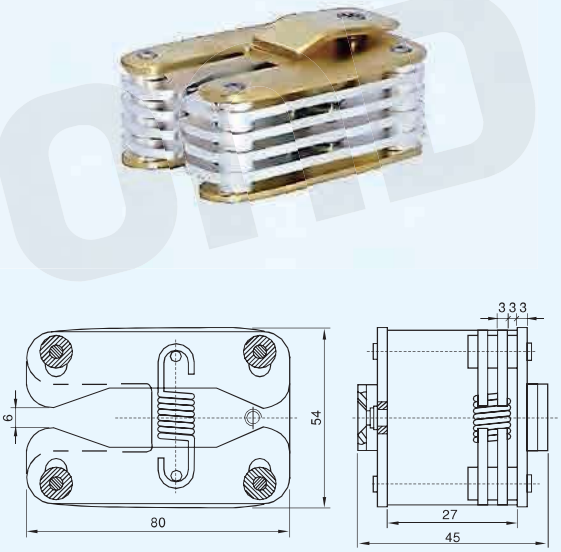

Model No.: LYA403 GC6-630A Flat contact with 12 sheets
Contact plate thickness: 10mm Insertion depth:34±2mm

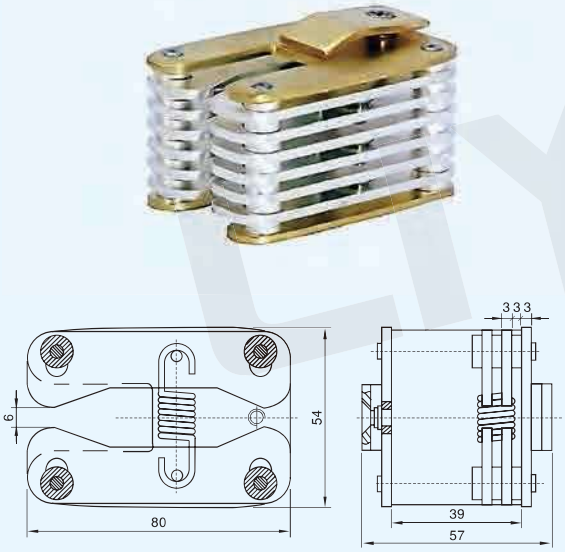

Model No.: LYA404 GC6-1000A Flat contact with 20 sheets
Contact plate thickness: 10mm Insertion depth:34±2mm

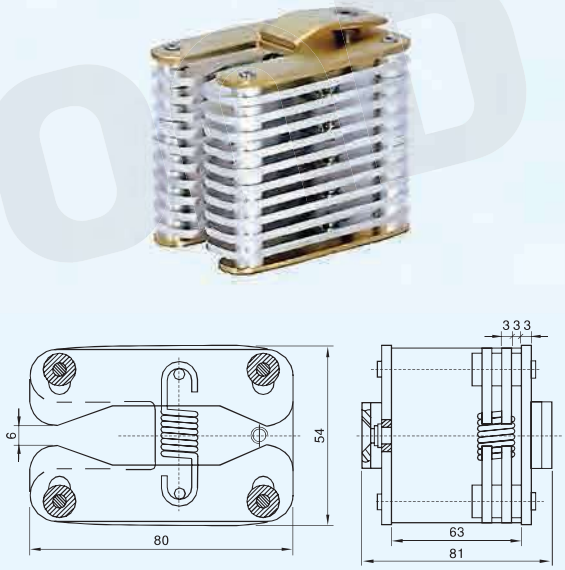

12KU EXTENSION SPRING FLAT CONTACT SERIES

Model No.: LYA405 GC6–1250A Flat contact with 24 sheets
Contact plate thickness: 10mm Insertion depth:34±2mm



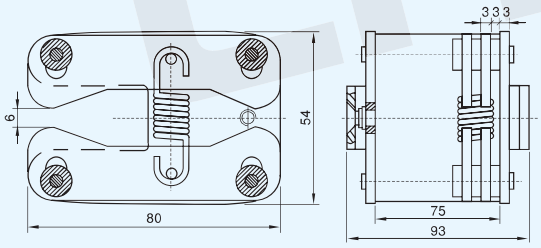

Model No.: LYA406 GC6–1600A Flat contact with 28 sheets
Contact plate thickness: 12mm Insertion depth:34±2mm



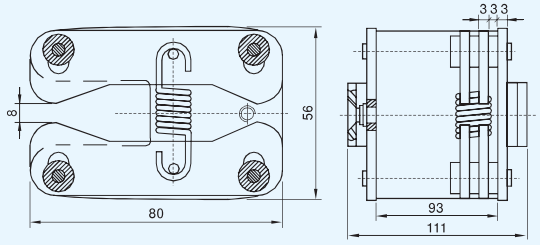

Model No.: LYA407 GC6–1600A Flat contact with 32 sheets
Contact plate thickness: 12mm Insertion depth:34±2mm



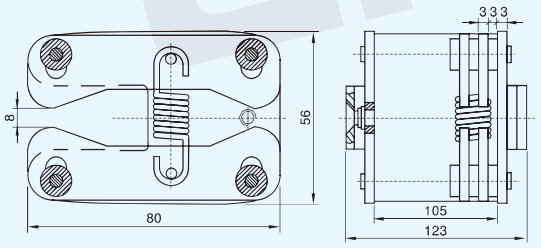

Model No.: LYA408 GC6–2000A Flat contact with 32 sheets
Contact plate thickness: 15mm Insertion depth:34±2mm



