MZ4-MZ7

Servomotor
for modulating control valves

[redacted]

MZ4-MZ7

Servomotor

Contents

Description 2
Features 2
Applications 3
Selection table 4
Technical specifications 5
Operation MZ4, MZ4A 6
Operation MZ7 11
Ordering information 16
Standards and approvals 17

Description

MZ4 and MZ7 servomotors are designed for all applications which require precise and controlled rotary movement. In particular, they can be used to operate VF, VFT, VFH and LMV valves for gas and air flow in combustion processes, with positioning by means of digital signals or analog control.

Features

Electrical motor with multi-stage spur gearbox inside a metal housing.

Provided with switching cams with adjusting screw.

Its rugged and functional design allows a fast and easy installation.

Available in Ex-proof version, for use in Zones 2 and 22, according to 2014/34/EU Directive (ATEX).

High positioning precision performed by a 32-bit microcontroller.

Status LEDs and position indicator of the motor visible externally.

Two push-buttons for manual adjustment of the position.

Two push-buttons to save min./max. positions (MZ7).

Analog input and output signals for electronic positioning.

The same unit is suitable for different voltages.

Adjustable opening time from 7s up to 90s.

Long-life brushless motor.

This control must be installed in compliance with the rules in force.

Applications

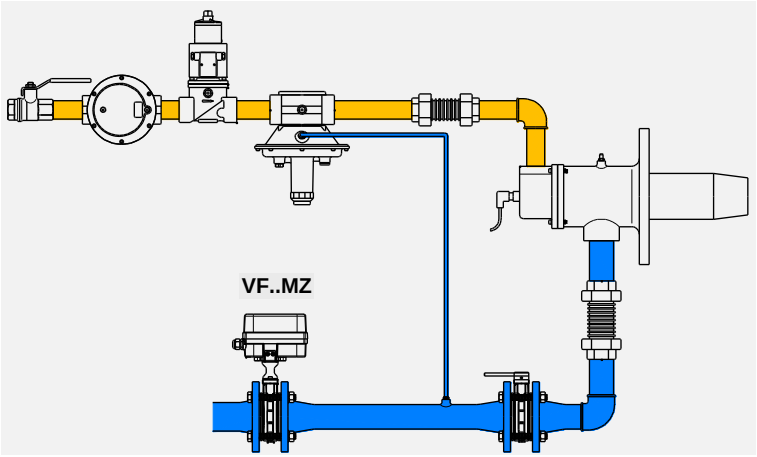

Fig. 1

- In case of combustion process being regulated by combustion air modulation, VF valves with servomotor can be used, coupled to another butterfly valve manually operated (available graduated scale and locking screw) to setup high-fire rate of the burner.

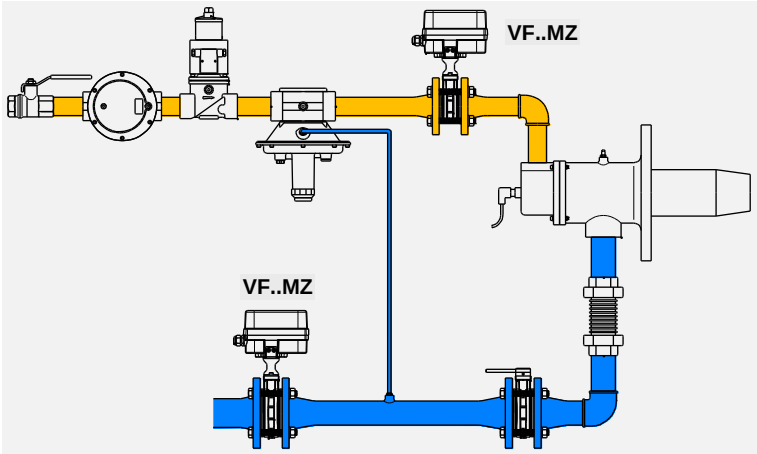

Fig. 2

- In case of combustion process with excess of air or gas, VF butterfly valve can be used, coupled to a Lambda sensor for ratio correction.

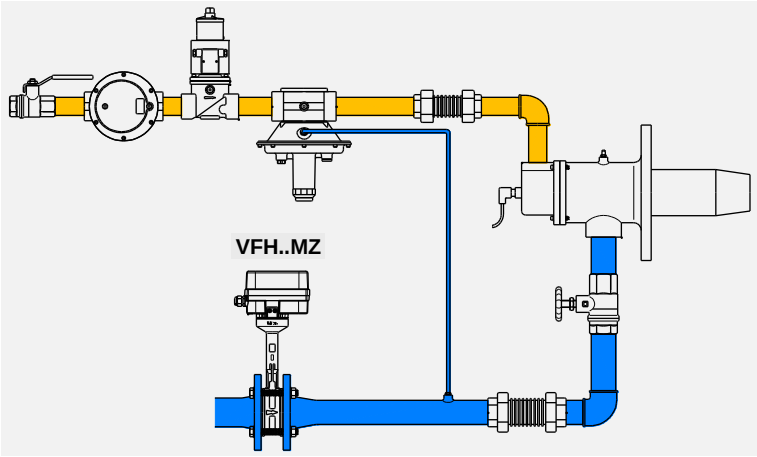

Fig. 3

- In case of combustion process with pre-heated air, VFH butterfly valve can be used with MZ servomotor.

! Location and mode of installation must be in compliance with local rules in force.

Selection table

MZ4	MZ4A	MZ7	
			Control
●	●	●	2-point
●	●	●	3-point
⊗	●	●	Analog
⊗	⊗	●	Digital
			Torque
●	●	●	5 Nm
○	○	○	10 Nm
			Running time per 90°
⦿	⦿	⦿	7 s
⦿	⦿	⦿	15 s
●	●	●	30 s
⦿	⦿	⦿	60 s
⊗	⊗	⦿	7...90 s continuous (1)
			Voltage
●	●	●	230VAC 50/60Hz
●	●	●	110-120VAC 50/60Hz
⊗	⊗	●	24VDC
			Inputs
●	●	⊗	Main voltage
⊗	⦿	⦿	0-10 V
⊗	⊗	⦿	0-20 mA
⊗	●	●	4-20 mA
⊗	⊗	●	Digitals 24VDC or 110-230VAC (2x)
			Outputs
⊗	⦿	⦿	0-10 V
⊗	⊗	⊗	0-20 mA
⊗	●	●	4-20 mA
⊗	⊗	●	Relays (2x)
●	●	⊗	Limit Switching cams (2x)
●	●	●	Aux. Switching cams (2x)
			Options
○	○	○	X= Ex-Proof execution
○	○	⊗	P1= Potentiometer 1kΩ as output (2)
⊗	○	●	P2= Redundant position control (2)

● Standard ○ Optional ⦿ Adjustable ⊗ Not available

(1) Custom rotation time can be set at the factory before shipping, or adjusted by the user.

(2) Options P1 and P2 are alternatives.

Technical specifications

Weight	2,4 Kg			
Rotation angle	0 / 90° MZ7 0 / 180° MZ4, MZ4A (0 / 90° with potentiometer)			
Position repeatability	±0,25°			
Ambient temperature	-15°C / +60°C			
Voltage tolerance	-15% / +10%			
Power consumption	10 VA max			
Protection class	Class I (EN 60335-1)			
Enclosure	IP65 (EN 60529)			
Cable gland	M20x1,5 (2x) for cable O.D. 7 / 12 mm (EN 62444)			
Wires cross-section	2,5 mm^2 max			
Holding torque	5 Nm			
Analog inputs	**Signal type** Overload max. Load impedance	**0-10V** 12Vdc 10KΩ	**0-20mA** 25mA 100Ω	**4-20mA** 25mA 100Ω
Analog outputs	**Signal type** Load max.	**0-10V** 10mA	-	**4-20mA** 350Ω
Position switches/relays max electrical rating	**Voltage** 250VAC	**Resist. Load** 2A	**Lamp. Load** 0,3A	**Induct. Load** 0,3A
Feedback Potentiometer (optional for MZ4 only)	1KΩ ±20% (±2% linearity) 18V max, 0,5W max, Iw≤ 1µA			

Overall dimensions

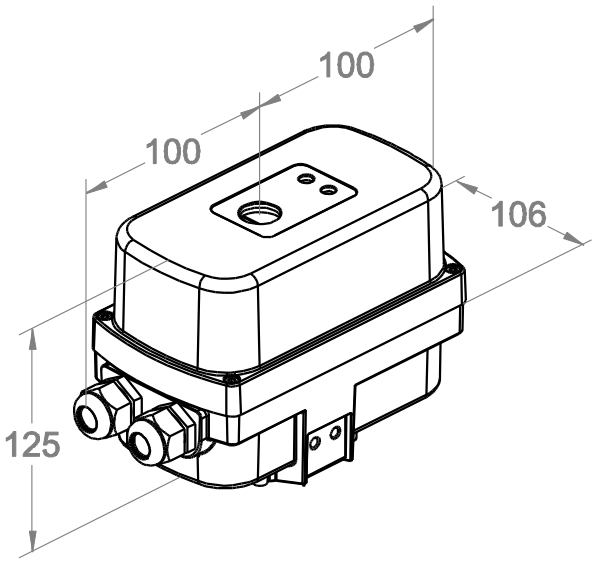

Fig. 4

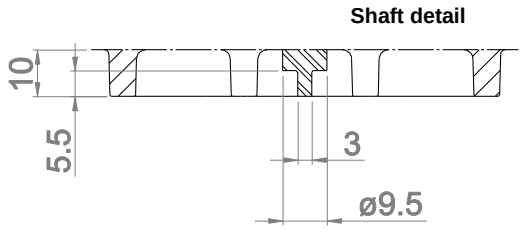

Fig. 5

Operation MZ4, MZ4A

This unit is designed for all applications that require high precision control of rotary movement. Inside the compact servo drive housing there is a BLDC electric motor, a gearbox and a control unit with a 32-bit microcontroller.

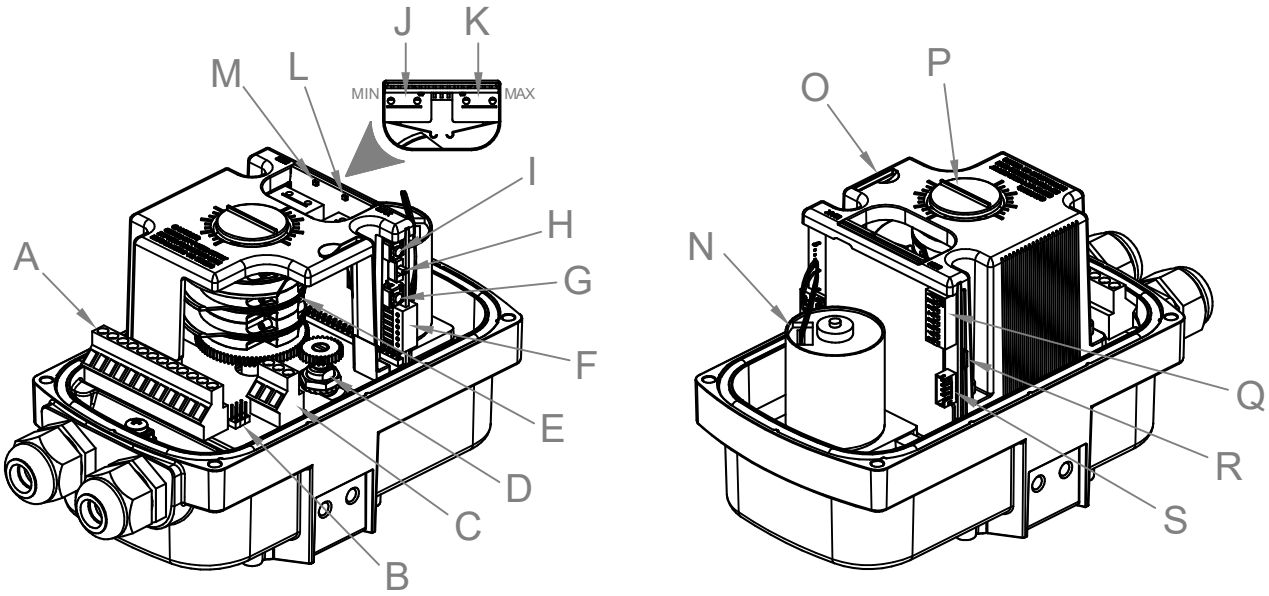

Fig. 6

A	Main terminal block	**J**	SW1 limit switch (MIN)
B	Pin jumpers (J8)	**K**	SW2 limit switch (MAX)
C	Optional terminal block (analog/Pot)	**L**	Alarms Led (red)
D	Potentiometer (optional)	**M**	Status Led (blue)
E	Cams (C1, C2, C3, C4)	**N**	BLDC motor
F	Motor connection plug	**O**	Plastic cover
G	Closing push button (B1)	**P**	Position indicator
H	Automatic/ Manual switch (S1)	**Q**	Dipswitch
I	Opening push button (B2)	**R**	USB port (reserved)
		S	Programming port (reserved)

The shaft rotation angle can be controlled via two voltage inputs, in conjunction with switching cams (C1, C2). In the MZ4A type, position control can be performed either with two voltage inputs or with an analog signal.

The servomotor is provided with two buttons for manual adjustment of the position during the commissioning and with two auxiliary cams (C3, C4) which activate switches for the monitoring of intermediate positions or to control external devices. Two led show the current status of the unit (e.g. manual operation, alarms, etc.).

The most of settings can be made with a dipswitch and some jumpers.

The current position can be monitored via an integrated potentiometer (optional) in MZ4 version, or an output analog signal in MZ4A version.

The potentiometer cannot be retrofitted, but it must be factory-installed as options.

! The potentiometer must be connected as a voltage divider with a high impedance load.

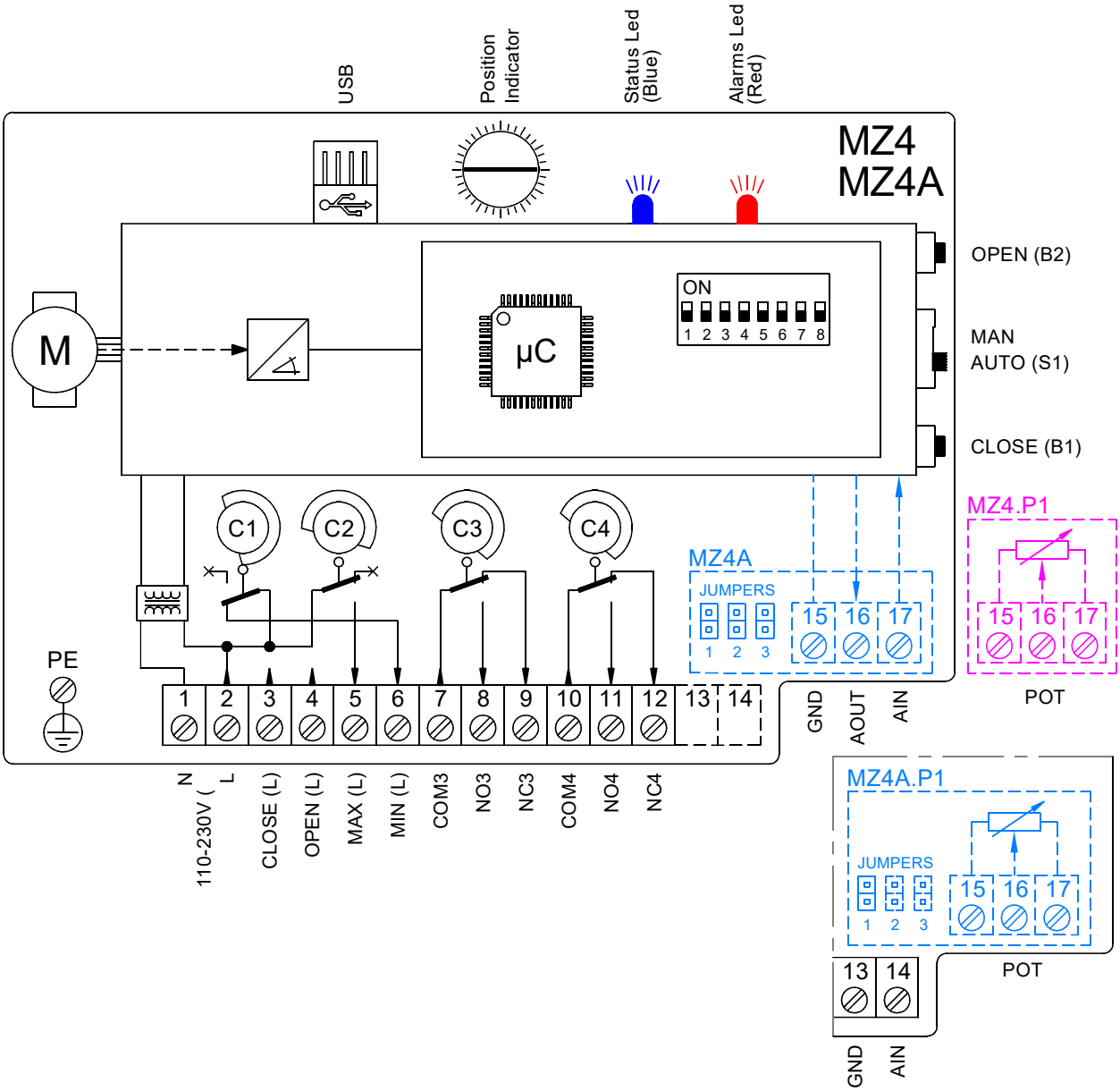

Fig. 7

Connections

(1,2) : Main power supply of the device between 110Vac and 230Vac.
(3) : Input for closing
(4) : Input for opening
(5) : Feedback for MAX position
(6) : Feedback for MIN position
(7,8,9) : Contacts activated directly by the cam C3 for the monitoring of intermediate positions.
(10,11,12) : Contacts activated directly by the cam C4 for the monitoring of intermediate positions.
(13,14) : Optional input for analog signal with potentiometer as feedback (MZ4A.P1)
(15,16,17) : Optional potentiometer or input/output analog signals (MZ4A)

! Voltage of terminals designed with (L) refer to terminal N.
Dip-switches can be set in manual mode or before powering the unit.
Pin jumpers must be set before powering the unit.

Manual mode

For a simplified commissioning, the actuator can be operated manually. The manual mode is useful to set the limit positions for the process, regardless of the input signals.

To enter in the manual mode, shift the switch S1 upward (Led Status flashes slowly). Now it's possible to open the valve (counter clockwise rotation seen from the top), by pressing the button B2, and to close the valve (clockwise rotation seen from the top), by pressing the button B1.

In manual mode, the speed of rotation is 30 sec for 90°.

! When a potentiometer is installed do not exceed the working range 0-90°.

Setting of the MIN and MAX positions

The MIN and MAX positions are the extreme positions of the working range and are set by adjusting the cams C1 and C2, which activate the switches SW1 and SW2 respectively. When a cam operates the relevant switch, the motor stops.

In the MZ4A version, when the cam C1 operates the switch SW1, the motor stops and the current position is saved as MIN. Likewise, when the cam C2 operates the switch SW2, the motor stops and the current position is saved as MAX.

! After adjusting a cam, always move the servomotor until the relevant switch is activated, in order to save the position.

Automatic mode

To enter in the automatic mode, shift the switch S1 downward. Now the operating mode corresponds to the one selected via the dipswitches (see dip chart below).

! Do not change the cams position in automatic mode.

2-point control

It's possible to open the valve (counter clockwise rotation seen from the top) by applying line voltage to the terminal 4. The rotation stops when the maximum position is reached (cam C2 switches the line voltage to the terminal 5).

If the voltage to the terminal 4 is disconnected, the servo closes the valve (clockwise rotation seen from the top). The rotation stops when the minimum position is reached (cam C1 switches the line voltage to the terminal 6).

3-point control

It's possible to open the valve (counter clockwise rotation seen from the top) by applying line voltage to the terminal 4. The rotation stops when the maximum position is reached (cam C2 switches the line voltage to the terminal 5) or when the voltage to the terminal 4 is disconnected.

It's possible to close the valve (clockwise rotation seen from the top) by applying line voltage to the terminal 3. The rotation stops when the minimum position is reached (cam C1 switches the line voltage to the terminal 6) or when the voltage to the terminal 3 is disconnected.

Analog control

The angular position corresponds to the input analog signal supplied by an external controller, scaled on the previously stored working range (MIN-MAX). An analog output signal proportional to actual angular position is also provided.

At power on, the motor moves to MIN position for resetting, then moves in accordance with input signal.

The factory setting of input/output signals is 4-20mA. They can be changed in 0-10V removing the pin jumper 1, shifting pin jumper from 2 to 3 and setting dip3 as ON.

The input analog signal is processed internally with a 12-bit resolution. In order to avoid constant corrections of the positions due to signal fluctuations or noise, a hysteresis of 10 LSB (0.08mA) is factory set.

Dual control

The position is controlled in 3-point mode as long as the analog input is less than 4 mA. When this signal enters the 4-20 mA range, control switches to the analog input. This operating mode can be used when a pre-purge is required before the ignition.

Test mode

Motor moves continuously between minimum and maximum positions, with the selected run time. All external commands are ignored.

MZ4 DIP chart

Running time 0-90°

60 s

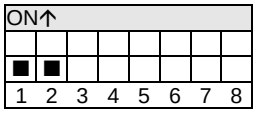

30 s

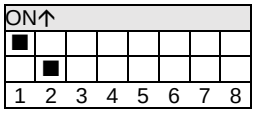

15 s

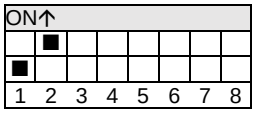

7 s

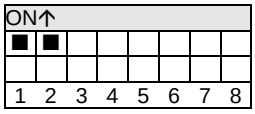

Analog signals

4-20 mA

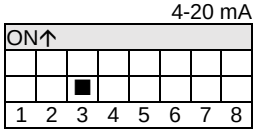

0-10 V

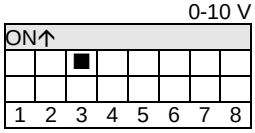

Input and output must be of the same type

Behaviour without input signal 4-20 mA

STOP

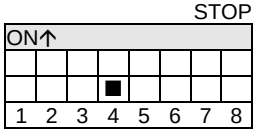

➔MIN

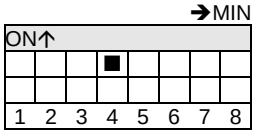

Sense of rotation

STRAIGHT

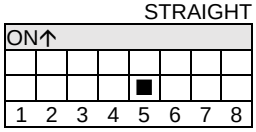

REVERSE

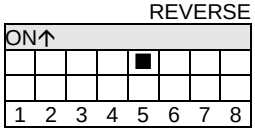

Control type

2-POINT

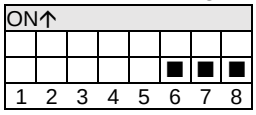

3-POINT

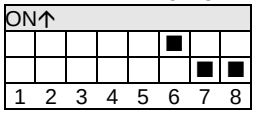

ANALOG

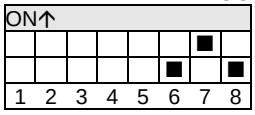

DUAL

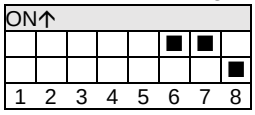

N/A

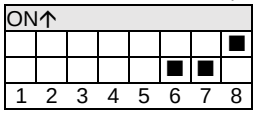

N/A

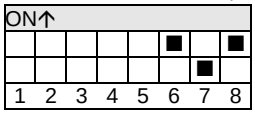

N/A

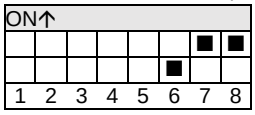

TEST

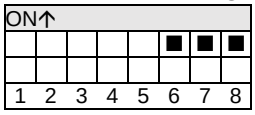

MZ4A pin jumpers

Analog signals type

4-20 mA

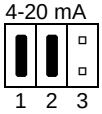

0-10 V

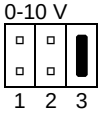

! All jumpers must be set according to DIP3 setting.
Jumpers 2 and 3 must be set alternatively.

MZ4 Operating state

Normal operation

Nr.	Status Led BLUE	Alarms Led RED	State description
1	Fast flashing	OFF	Automatic mode
2	Slow flashing	OFF	Manual mode
3	Permanent light	OFF	Resetting MIN position at power on (when required)

Fast flashing: 4 times per second Slow flashing: 1 time per second

Alarms chart

Alarm Nr.	Status Led BLUE	Alarms Led RED	Alarm type	Description	Cause
1	OFF	1 Flashing	Warning	Input signal outside the expected range (e.g., 4-20mA) Both 3 and 4 terminals powered at the same time	Cable break or disconnected or remote control defective Jumpers/Dip configuration
2	OFF	2 Flashings	Fault	Excessive motor current (Motor is stopped)	Excessive torque requirement Motor is defective
3	OFF	3 Flashings	Warning	High motor current	High torque requirement
4	OFF	4 Flashings	Fault	Motor does not turn	Motor is defective or disconnected
5	OFF	5 Flashings	Warning	High temperature	Ambient temperature too high
6	OFF	6 Flashings	Warning	Dual-control signal requirements	4-20mA control in not selected
7	OFF	7 Flashings	Warning	No run-mode selected	Dip configuration not allowed
	OFF	Permanent light	Fault	MCU error	-

n-Flashing (2 per second) followed by a longer pause (2 seconds)

Operation MZ7

This unit is designed for all applications that require high precision control of rotary movement between 0° and 90°, with a wide range of control modes. Inside the compact servo drive housing there is a BLDC electric motor, a gearbox, a control unit with a 32-bit microcontroller and a Wi-Fi module.

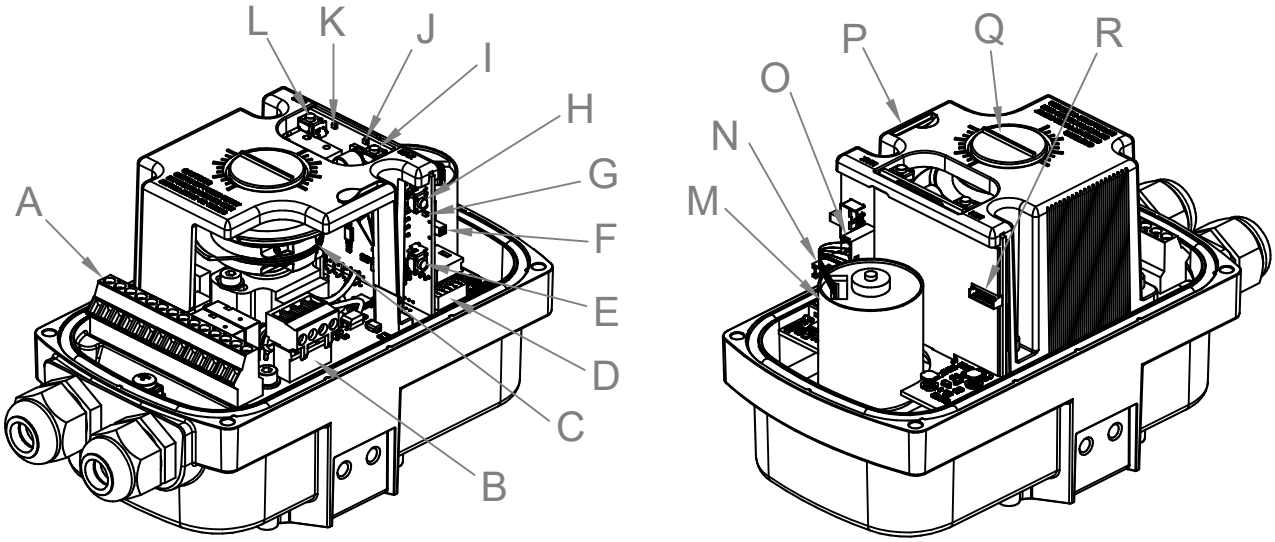

Fig. 8

A	Main terminal block	**J**	Alarms Led (red)
B	Analog and 24VDC terminal block	**K**	Status Led (blue)
C	Cams (C1, C2)	**L**	MIN push button (B4)
D	Dipswitch	**M**	BLDC motor
E	Closing push button (B1)	**N**	Terminal T1 port
F	Automatic/ Manual switch (S1)	**O**	Motor connection plug
G	Manual Operation Led (orange)	**P**	Plastic cover
H	Opening push button (B2)	**Q**	Position indicator
I	MAX push button (B3)	**R**	Programming port (reserved)

The shaft rotation angle can be controlled via digital signals, analog signal or their combination.

The current position can be monitored via an output analog signal, and the dry contacts of two relays can be used to know when the saved positions are reached.

Most settings can be made with buttons for manual position adjustment and for storing the minimum/maximum limits, in combination with the dip-switch for hardware settings of the analog signals. Advanced settings are managed with an App for Android™ smartphones, via a Wi-Fi connection.

MZ7 servomotor is provided with buttons for manual adjustment of the position and to save minimum/maximum limits. Some LEDs visible even externally, show the current status of the unit (e.g. manual operation, memorization, alarms, etc.).

The servomotor is also provided with two auxiliary cams which activate the switches C1-C2 for monitoring of intermediate positions or to control external devices.

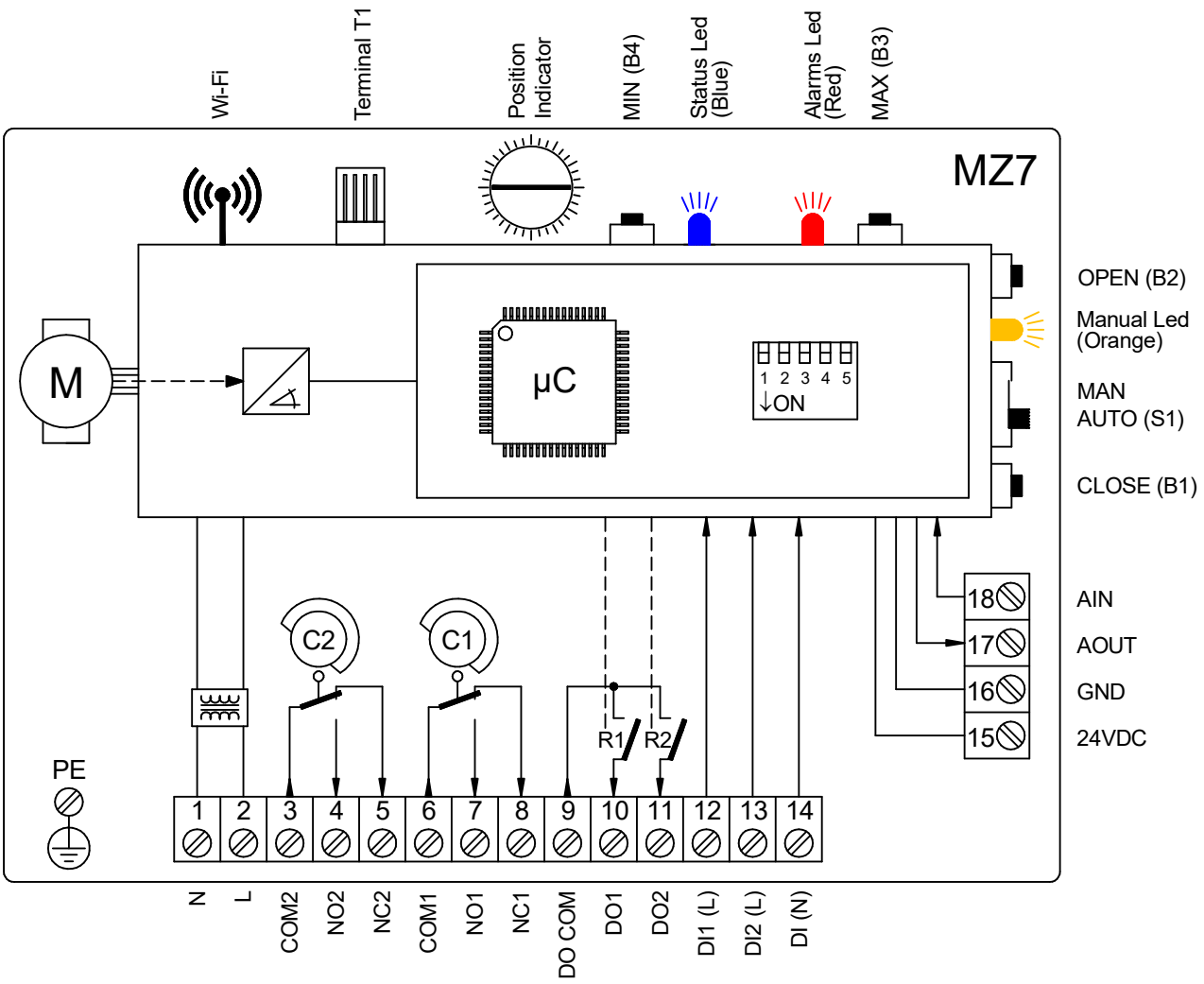

Fig. 9

Connections

(1,2) : Main power supply of the device between 110Vac and 230Vac.
(3,4,5) : Contacts activated directly by the cam C1 for the monitoring of intermediate positions.
(6,7,8) : Contacts activated directly by the cam C2 for the monitoring of intermediate positions.
(9,10,11) : Relay contacts activated by the control unit to monitor the saved positions: DO1=MIN, DO2=MAX or programmable in Dual Control Mode.
(12,13,14) : Input digital signals.
(15,16) : Alternative power supply 24VDC.
(16,17,18) : Input/output analog signals.

Manual mode

For a simplified commissioning, the actuator can be operated manually. The manual mode is useful to determine the operating positions for the process, such as the High/Low fire positions.

To enter in the manual mode, shift the switch S1 upward (Led Status flashes slowly). Now it's possible to move the valve toward the 90° position (counter clockwise rotation seen from the top), by pressing the button B2, and to move the valve toward the 0° position (clockwise rotation seen from the top), by pressing the button B1.

Setting of the MIN and MAX positions

In manual mode it's possible to save current position as MIN (MAX) by pressing button B4 (B3) for more than 3 seconds (shorter pressing are not considered). When the position is saved, Status Led lights up permanently and the button may be released.
The MIN/MAX positions cannot exceed the range 0/90°, moreover the MAX position cannot be lower than the previously saved MIN position (and vice versa). In all these cases the position will not be saved and an alarm will rise (see "*Alarm Table*"), until a new proper position is saved.

Running time setting (continuous)

Factory standard setting for running time is 30s for 0-90°. However, requested running time is setup in the factory prior despatch according to customer's order information. In case of need, it can be modified on the field by the user, according to following instructions.
Press both B3 and B4 buttons at the same time, keeping the buttons pressed for the running time required (Status Led will light up when this time is within the 7-90s range). When the buttons are released, this time will be saved as rotation time from 0° to 90°. A running time outside the admitted range will not be saved and an alarm will raise (see "*Alarm Table*"), until a new proper time is saved.
The adjusted running time will become operative as the user switches from manual mode back to automatic mode.

Automatic mode

To enter in the automatic mode, shift the switch S1 downward. Now the operating mode corresponds to the one previously set via the App ***MZ7tool*** from list below:

RUN MODE

Analog control (default)
2-point control via digital input DI1
3-point control via digital inputs DI1 and DI2
4-point control via digital inputs DI1 and DI2 (see below)
Dual control: 3-point via digital inputs DI1 and DI2 with analog control
Test mode

OPTIONS

Input range 0-20mA or 4-20mA
Behaviour without input signal (4-20mA): stop, open or close
Sense of rotation: straight or reverse

Analog control

The angular position corresponds to the input analog signal supplied by a setpoint device, scaled on the previously stored working range (MIN-MAX). Factory setting allows full range of operation (0-90°) but, as above described, MIN and MAX position can be set within this range in manual mode.

An output analog signal proportional to angular position is also provided.

Both input and output signals can be chosen between 0-10V, 4-20mA setting the proper dipswitch configuration (see "DIP Chart").

The input analog signal is processed internally with a resolution of 12 bit. In order to avoid constant corrections of the position due to signal fluctuations or noise, a hysteresis of 10 LSB (0.08mA) is factory set.

2-point control

The presence/absence of voltage at input D1 determines the position to be reached.

Digital input D1	*Position*
OFF	MIN
ON	MAX

3-point control

The voltage combination at inputs D1 and D2 determines the position to be reached.

Digital input D1	*Digital input D2*	*Position*
OFF	OFF	STOP
ON	OFF	MAX
OFF	ON	MIN
ON	ON	STOP

4-point control

In addition to MIN and MAX positions, it is possible to define other 3 positions via the App: LOW, MEDIUM and HIGH, as percentage (MIN is 0%, MAX is 100%). With different digital inputs it is possible to reach these positions as table below:

Digital input D1	*Digital input D2*	*Position*
OFF	OFF	MIN
ON	OFF	LOW
OFF	ON	MEDIUM
ON	ON	HIGH

Dual control

In this run mode it is possible to set how the servomotor should move, for each combination of digital inputs: if to reach a defined position (MIN, LOW, MEDIUM, HIGH or MAX) or follow the analog signal. Furthermore, it is possible to define the speed to reach the position, as a percentage of the main speed.

All parameters below have to be set via the App.

Digital input D1	*Digital input D2*	*Parameter for target*	*Parameter for speed*
OFF	OFF	POS_DI1_OFF_DI2_OFF	VEL_POS_DI1_OFF_DI2_OFF
ON	OFF	POS_DI1_ON_DI2_OFF	VEL_POS_DI1_ON_DI2_OFF
OFF	ON	POS_DI1_OFF_DI2_ON	VEL_POS_DI1_OFF_DI2_ON
ON	ON	POS_DI1_ON_DI2_ON	VEL_POS_DI1_ON_DI2_ON

It is also possible to program in which positions to activate the digital output DO1 and DO2, usually set at MIN and MAX.

To this purpose set the parameters POS_RELE_1 and POS_RELE_2 as MIN, LOW, MEDIUM, HIGH or MAX.

Test mode

Motor moves continuously between minimum and maximum positions, with the selected run time. All external commands are ignored.

MZ7 DIP chart

The dipswitches are used to set the input/output analog signals only. In the case of current signal, the range 0-20mA may be set with the App.

Input analog signal

4-20 mA

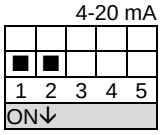

0-10 V

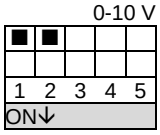

Output analog signal

4-20 mA

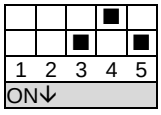

0-10 V

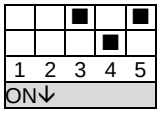

! The above settings are required for both software and hardware purposes. Do not set other configurations.

MZ7 Operating state

Normal operation

Nr.	Status Led BLUE	Alarms Led RED	State description
1	Fast flashing	OFF	Automatic mode
2	Slow flashing	OFF	Manual mode
3	Permanent light when position has been saved	Flashing if the position is not correct	Setting of the MIN and MAX positions (Manual mode)
4	Permanent light while buttons are being pressed to set a run time	Flashing if the time is not correct (T≤7s, 90s≤T)	Running time setting (Manual mode)

Fast flashing: 4 times per second Slow flashing: 1 time per second

Alarms chart

Alarm Nr.	Status Led BLUE	Alarms Led RED	Alarm type	Description	Cause
1	OFF	1 Flashing	Warning	Input signal is missing (4-20mA)	Cable break or disconnected, remote control defective
2	OFF	2 Flashings	Warning	Invalid position	Attempt to save an invalid position (e.g. MIN>MAX)
3	OFF	3 Flashings	Warning	Invalid running time	Attempt to save an invalid running time (out of 7-90s range)
4	OFF	4 Flashings	Fault	Motor fault	Motor is defective
5	OFF	5 Flashings	Warning	Potentiometer does not detect movements	Motor is disconnected, potentiometer is disconnected, torque is too high
6	OFF	6 Flashings	Fault	No feedback from motor	Motor is defective
7	OFF	7 Flashings	Fault	Low voltage	Power unit is defective
8	OFF	8 Flashings	Warning	High temperature	Ambient temperature too high
9	OFF	9 Flashings	Warning	Invalid position 4-point	-
10	OFF	10 Flashings	Warning	Invalid running time has been saved	-
11	OFF	11 Flashings	Warning	Invalid position has been saved	-
12	OFF	12 Flashings	Fault	Potentiometer signal is out of range	Potentiometer disconnected or loose
13	OFF	13 Flashings	Fault	MCU error1	-
14	OFF	14 Flashings	Fault	MCU error2	-

n-Flashing (2 per second) followed by a longer pause (2 seconds)

Ordering information

		MZ	410A	. XP1
Type				
Model				
4	2/3-point	5 Nm		
410	2/3-point	10 Nm		
4A	2/3-point + analog	5 Nm		
410A	2/3-point + analog	10 Nm		
7	digital + analog	5 Nm		
710	digital + analog	10 Nm		
Options				
X	Ex-Proof execution			
P1	Potentiometer 1kΩ as output			
P2	Redundant position control			

Ex-proof version

The servomotor can be provided in Ex-Proof version for use in Zones 2 and 22, according to 2014/34/EU Directive (ATEX):

category	II 3G, II 3D
protection mode	Ex nR IIA T4 Gc X (restricted breathing enclosure)
	Ex tc IIIC T135°C Dc X

Accessories

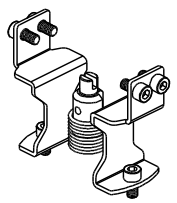

Adapter set for
VF-VFT butterfly valves
(Set M-MT)

Fig. 10

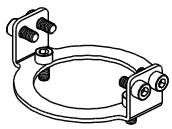

Adapter set for
VFH butterfly valves
(Set MH)

Fig. 11

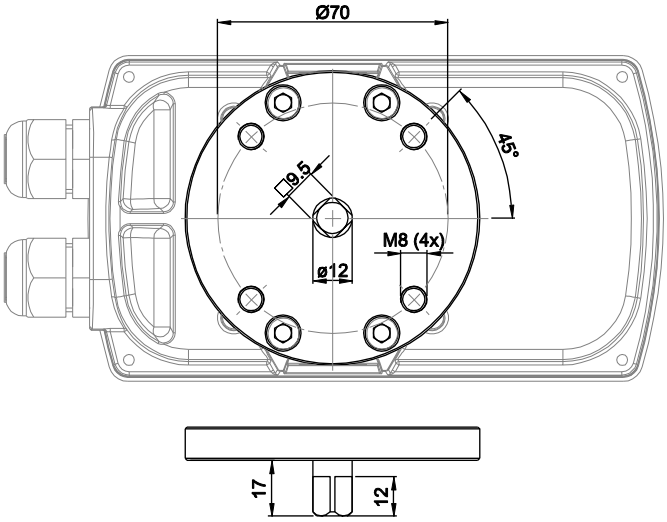

Adapter set
flange ISO 5211 F07

Fig. 12

Standards and approvals

The product complies with the essential requirements of the following European Directives and their amendments:

2009/142/EC (Gas Appliances Directive) **Reg.-No 01MECH**
2014/34/EU (ATEX) when shown upon the product
2014/30/EU (Electromagnetic Compatibility)
2014/35/EU (Low Voltage Directive)
2011/65/EU (RoHS II)

The product complies with the Technical Regulation TP TC 004/2011-016/2011-020/2011-032/2013 of Russia, Belarus and Kazakhstan.

Certificate No.: TC № RU Д-IT.PA01.B.21942

Quality Management System is certified according to UNI EN ISO 9001.