Direct Acting 1/4"
740-02-454

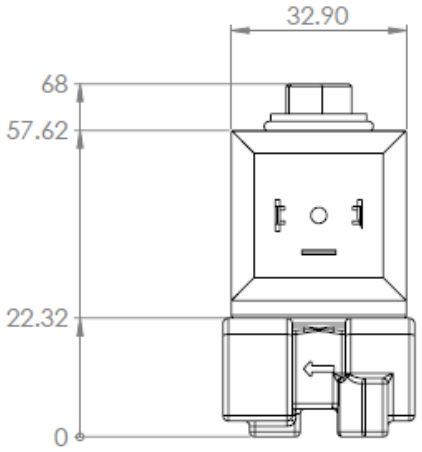

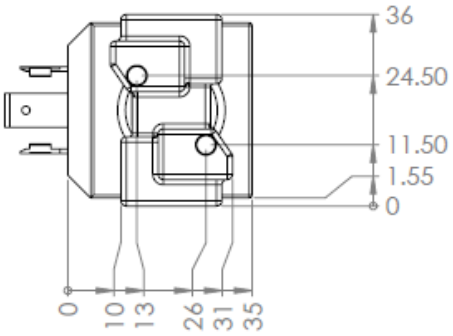

Techincal

Valve Specification	
Part Number	740-02-454
Thread Size	1/4”
Thread Type	BSP
Operating Pressure	250 PSI
Orifice	3.2 mm
Body Material	Brass
Seal Material	VITON
Internal Parts	Stainless Steel
Mounting	2 x M4
Type	2/2 Normally Closed
Media / Fluid Type	Air / Water
Ambient Temperature	60°C
Fluid Temperature	150°C

Electrical Specification	
Part Number	740-02-454
Voltage	208-240V
Frequency	50-60Hz
Duty	ED 100% (Continuous)
Insulation Class	Class H
Electrical Connection	DIN 46350-A
Coil Material	Rynite
IP Rating	IP 65

Additional Information	
Approvals	cULus CE
Customised Labelling	Yes

Image for Illustration Purposes Only



Every effort has been taken to ensure the accuracy of this specification. However in order to maintain our technological lead we are continuously improving our products which could, without notice result in amendments or omissions to this specification. We cannot accept responsibility for damage, injury, loss or expenses resulting therein.