1 Status-LED (CPU-module)
2 RJ-45 connector for KFM controller 902 / 93
3 Configuration interface (service) for PC connection
4 Binary input modules with relay
5 Power-LED (power supply module)

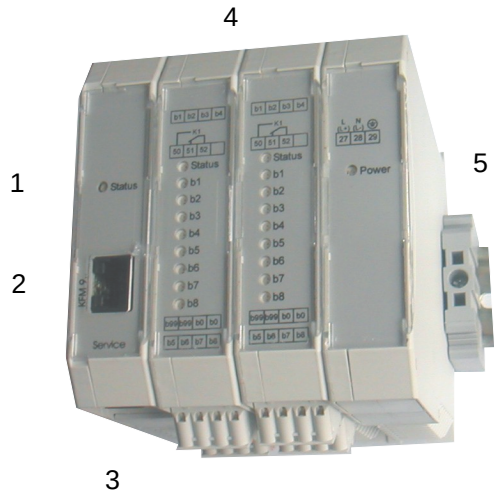

General description:

Compact device for operating and malfunction indication in control and monitoring equipment. In conjunction with KFM-controller 902 / 903 / 93.. operating and malfunction messages can additionally be displayed in plain text-messages on the controller. A message list shows the resp. texts for all activated binary inputs in the order of their occurrence. Additionally, a history can be displayed depending on the version. The messages can be assigned to relays for collective or first-value message optionally.

The device is modular in structure for mounting on DIN rail. It consists of a CPU- and a power-module and, depending on the number of required binary hardware inputs, of one ore more input modules, each with 8 binary inputs and one relay contact implemented as potential-free changeover contact.

The configuration of the inputs, the assignment to the collective relay and the entry of the texts can easily be modificated by WinPKS-PC-software.

Types:

CPU-modules:

826260	CPU-module with interface for plain text-messages
826264	CPU module with interfaces for plain text-messages on devices 902/93 (LC-display) and for the connection of a bus adapter or additional device, for example, profibus or external setpoint.
826265	CPU module with interfaces for plain text-messages and history on devices 903/93 (TFT-display) and for the connection of a bus adapter or additional device, for example, profibus or external setpoint.

Binary in- output modules:

826230	Module with 8 binary inputs 230VAC,1 relay contact (pot.free changeover)
826238	Module with 8 binary inputs 24VDC,1 relay contact (pot.free changeover)

Power supply modules:

826250	Power supply module 100-230V AC
826258	Power supply module 24V AC or DC

Flow chart**:** (example)

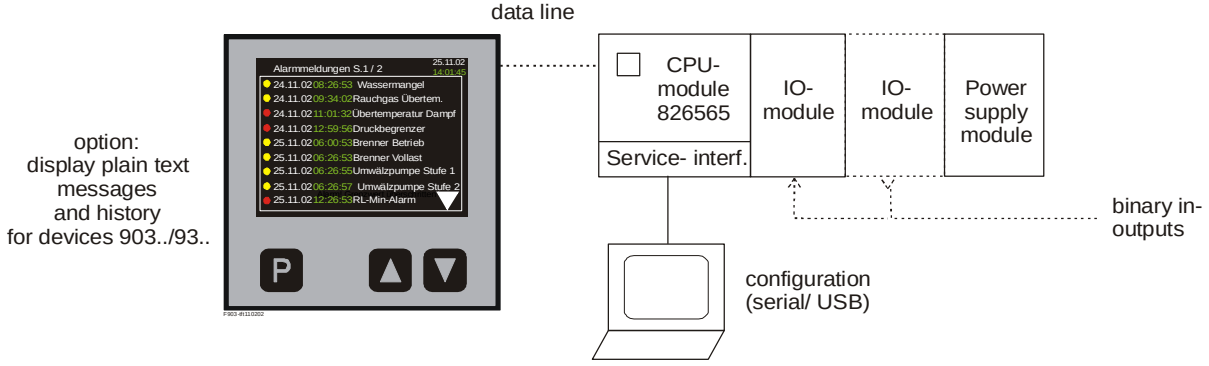

Technical data:

Operating- / malfunction inputs*:	230 VAC, about 2 mA, alternatively 24VDC, about 2 mA
Button inputs*:	230 VAC, about 2 mA, alternatively 24VDC, about 2 mA
Mains connection:	100..250 VAC, about 12 VA, alternatively 24VDC, about 12 VA
Relay output :	230 V / max. 2 A

* = Depending on different wire connention to the terminals, the use of external voltage alternatively to potential-free change-over switches is possible.

Other operating data:

Housing:	for fastening to 35mm mounting rail
Installation orientation:	vertical, unlocking tab downwards
Type of protection:	IP20
Perm. ambient temperature:	0...60°C,
Nominal temperature:	20°C
Climatic category :	Relative humidity <= 75 % yearly average, no condensation, KWF to EN 60 529
EMC:	refer to EN 61326

Installation dimensions (each module)

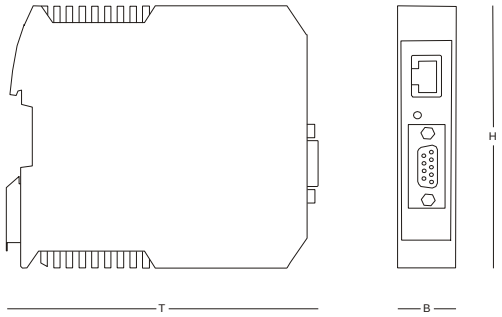

H= 99mm, B = 22,5mm, T = 116mm

Wiring diagram: (Example, valid for each delivered controller is the wiring diagram on its casing only.)

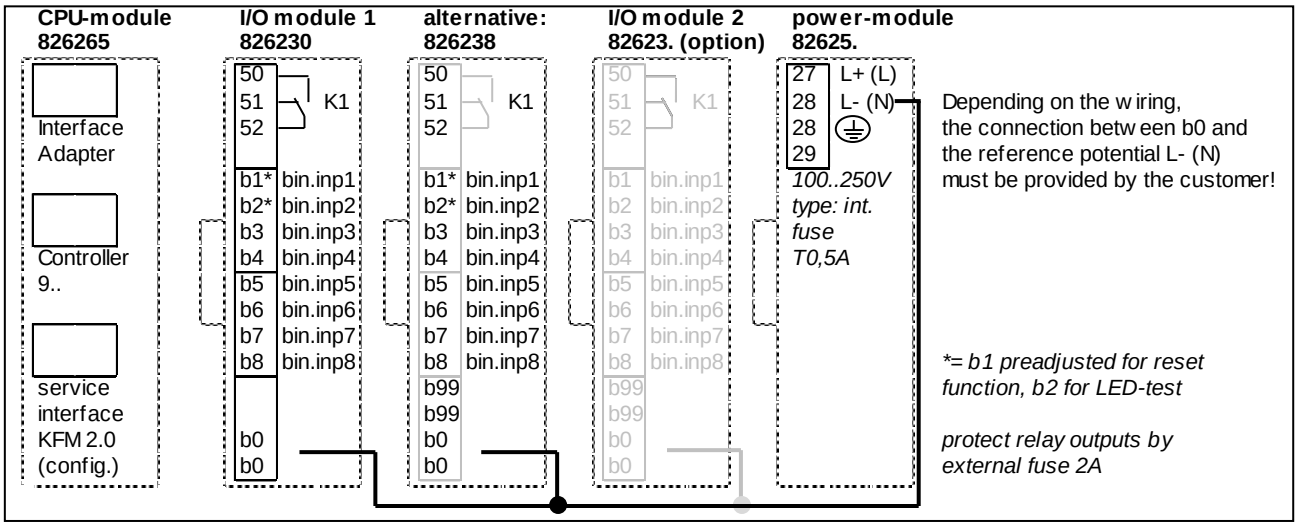

Wiring, example inp. 1:

