MV connection acc.
EN50180 Typ C

Insulation level:
12/28/75 , 24/50/125kV or 36/70/170kV

Electrical:
acc. IEC61869-6
acc. IEC61869-11

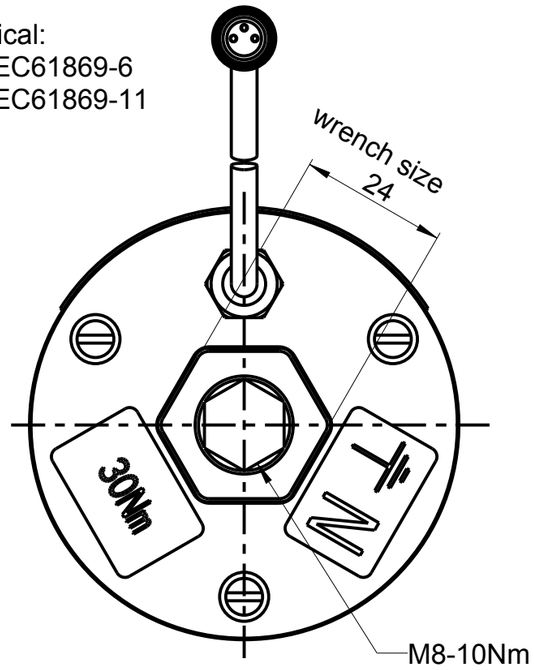

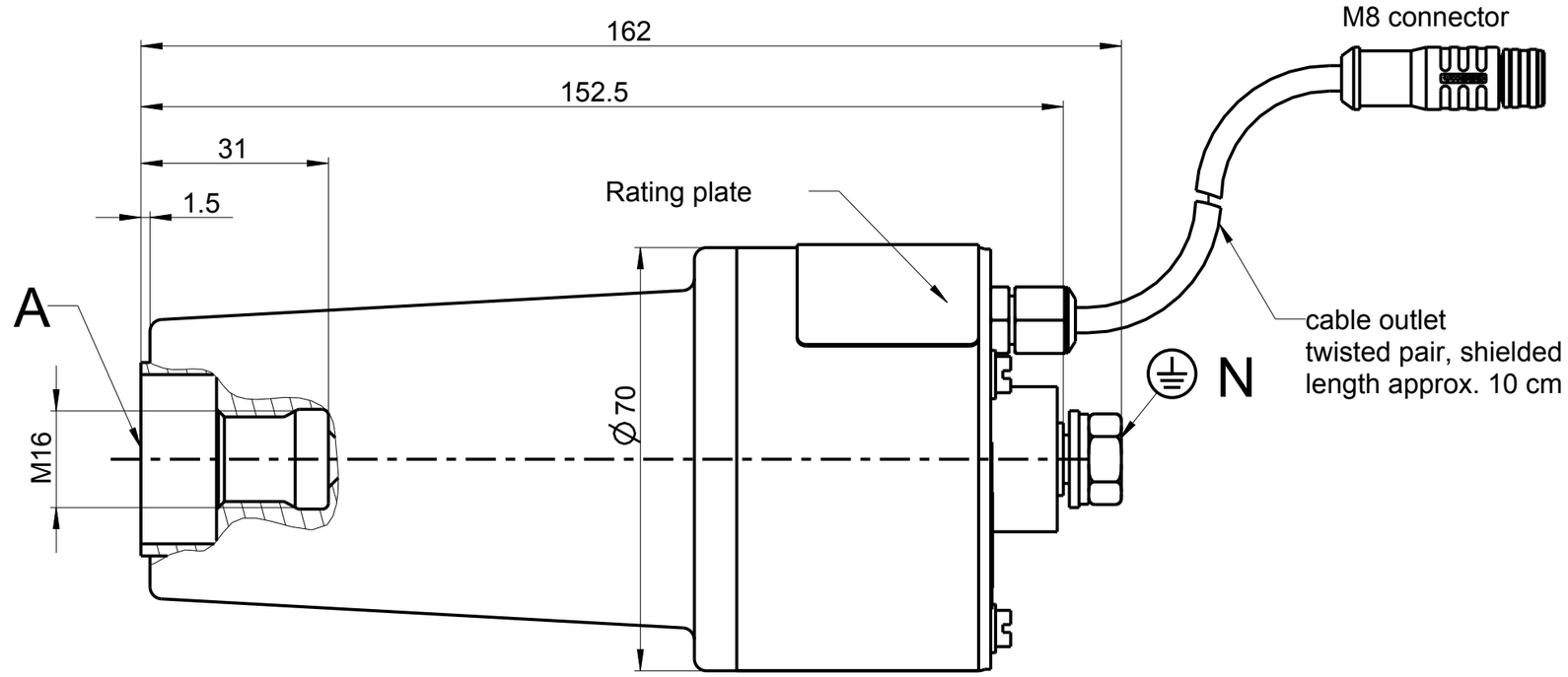

Principle circuit diagram:

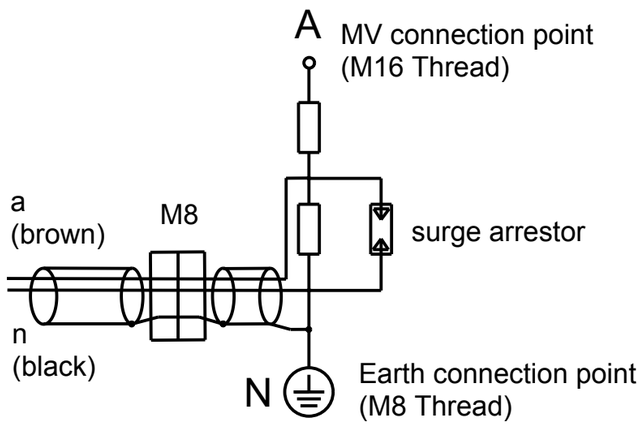

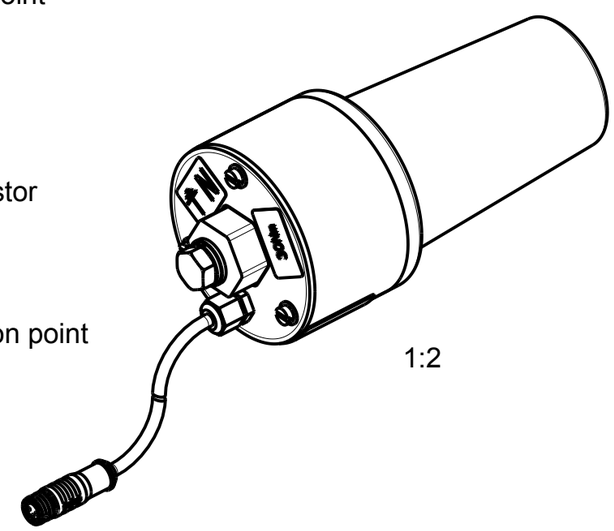

extension cable ,
length approx. 3.7m
or customer defined

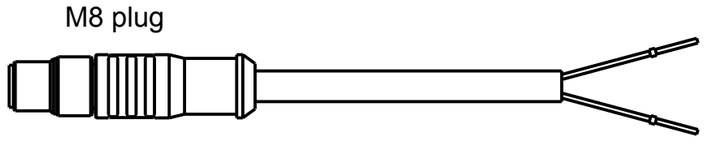

Suitable for:						
.				Unspec. Tolerances ISO 2768-c		Surf. fin.
7	LESTUNGSCHILD	31.08.15	BACH		Date	Name
6	BESCHRIFTUNGEN	21.11.14	KOST	Creat.	06.08.18	SCHREINER
				Check.	06.08.18	URBAN M.
12	BEMAßUNG/NORM	06.08.18	SCHR	Rel.		
11	BUCHSE	21.06.18	SCHR	VIE-R/ZEL		Pro/ENGINEER
10	ANPASSUNG	29.11.17	SCHR	ZELISKO Austria		
9	TABELLE	10.10.17	SCHR			
8	ANPASSUNG	28.08.17	SCHR			
Rev.	Change	Date	Name	Origin :		

Edition
Date
Scale 1:1 Weight 0.000 kg
Made from

VOLTAGE SENSOR

UW1001

Sheet 1 / 1 Sh.
DE
Supers. : Sup. by :

"The copying, distribution and utilization of this document as well as the communication of its contents to others without expressed authorization is prohibited. Offenders will be held liable for the payment of damages. All rights reserved in the event of the grant of a patent, utility model or ornamental design registration."

UW1001_KUNDE (A3)
*** . *** . ***