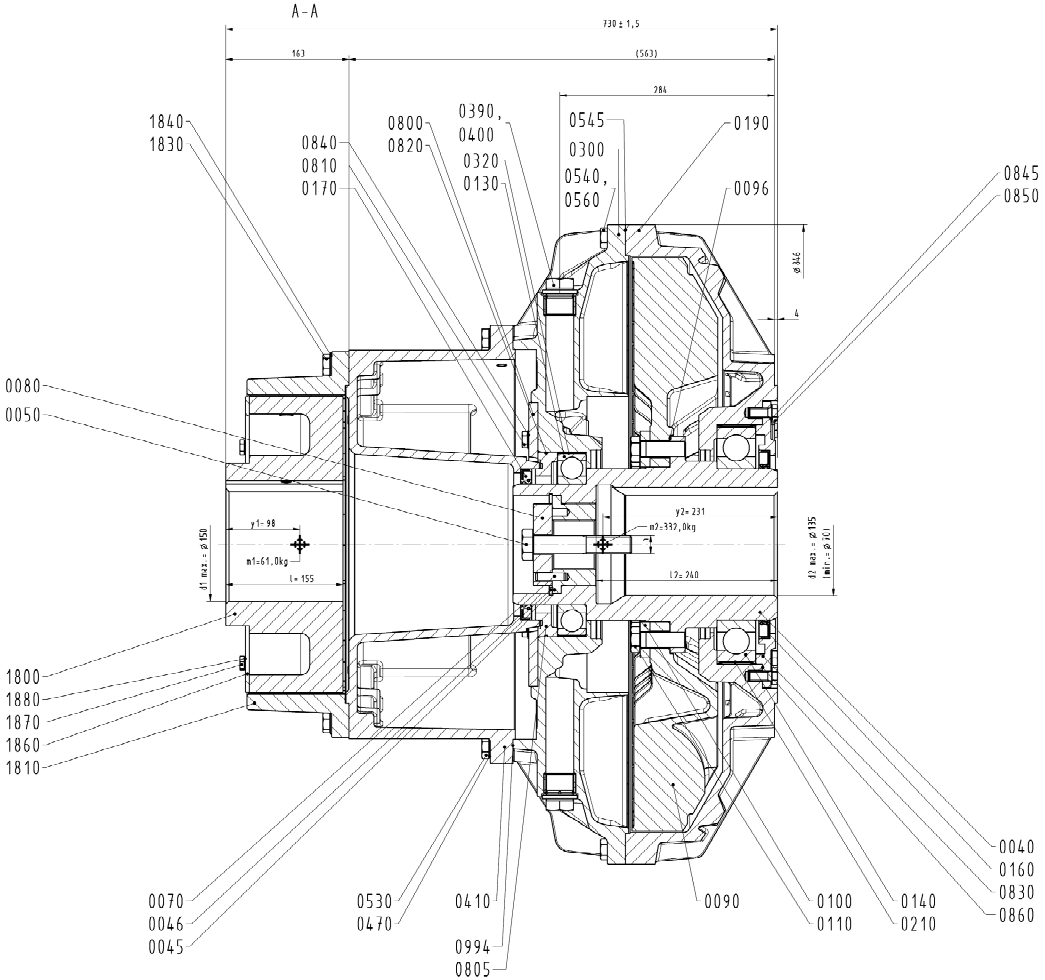

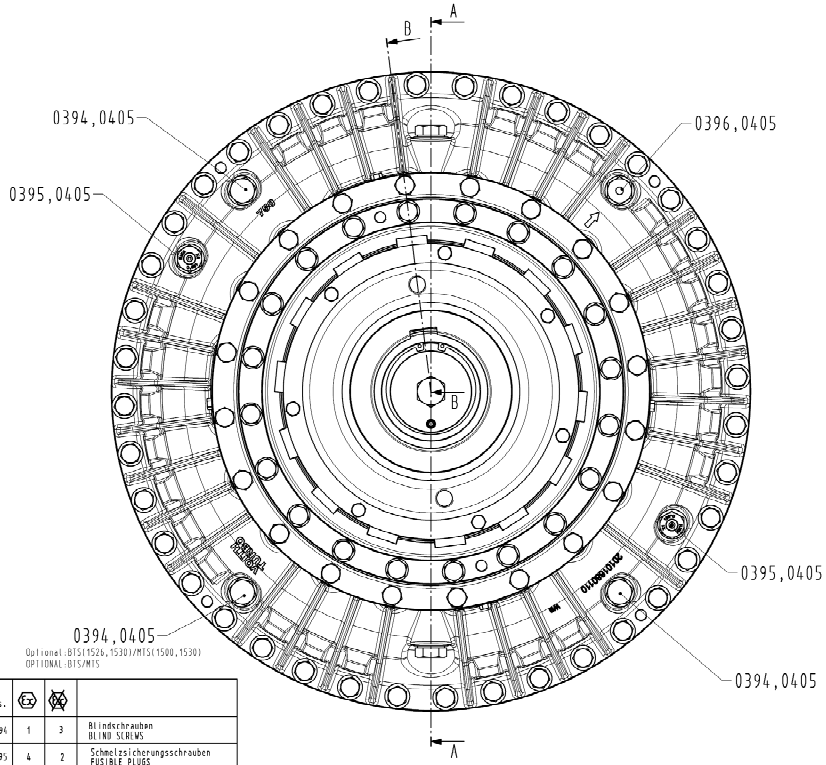

Pos.			
0394	1	3	Blindschrauben BLIND SCREWS
0395	4	2	Schmelzsicherungsschrauben FUSIBLE PLUGS
0396	1	1	Sichtschraube (Pfeilmarkierung) SIGHT GLASS (ARROW MARK)
0405	6	6	Dichtringe SEALING RINGS

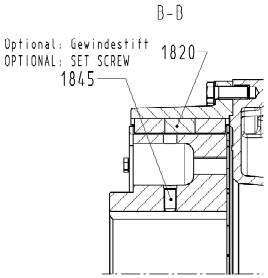

Bei ATEX-Ausführung, die Verbindungs-
kupplung / Primärkupplungsflansch axial
sichern (Stellschraube oder Haltescheibe).
IN CASE OF ATEX-DESIGN, SECURE
CONNECTING COUPLING / PRIMARY
COUPLING FLANGE AXIALLY
(ADJUSTING SCREW OR RETAINER).

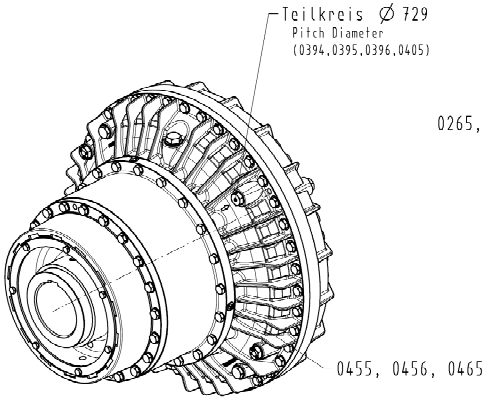

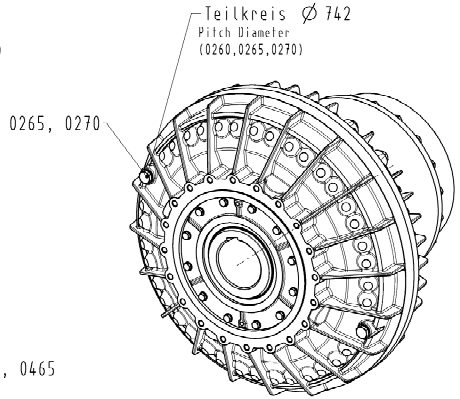

m1- Verbindungskupplungsschwerpunkt
= CENTER OF GRAVITY OF CONNECTING COUPLING

m2- Kupplungsschwerpunkt mit max. Fuellung
= CENTER OF GRAVITY OF COUPLING WITH MAX. FILLING

Revision	Quantity	Revision number	Revision description (shop and eng. info only)
03		399818	In No 34 orst. + abr.

Indexed: 750 TVV04, TVVY04 EPK

Language: DE EN

Scale of original: 1:2,5

Weight: 393 kg

Drawn: 2021-01-12 ehl.
Checked: 2021-01-12 krsg.
Approved: rarm-mi-sn ivet

Dimension in mm ISO 8015
Size: ISO 16016

Release mark: F

VOITH

Original: 91500447170

Title: Einbauplan
ASSEMBLY PLAN

Drawing number: 91500497310

Revision: 03

Sheet: 1 of 1 Sh.

Assembly drawing

Reply for:

Including "Copyright to DIN"
The contents of this document are the property of Voith. It may not be used, reproduced or made available to third parties without express written consent. Violators will be held liable for payment of damages. All rights including those in the event of the grant of a patent or registration of a utility model or design are reserved.
(Applies to Germany only: Section 826 of the German Civil Code, Section 823 Para. 2 of the German Civil Code, Section 4 No. 9 of the Act Against Unfair Competition, Section 142 Para. 2 No. 1 of the Trademark Act, Section 39 Para. 2 of the Patent Act, Section 25 Para. 2 of the Utility Model Act, Section 5 Para. 2 of the Semiconductor Protection Act, Section 2 Para. 2 No. 2 of the Act on the Protection of Designs).