6542305 AIR BLOWER

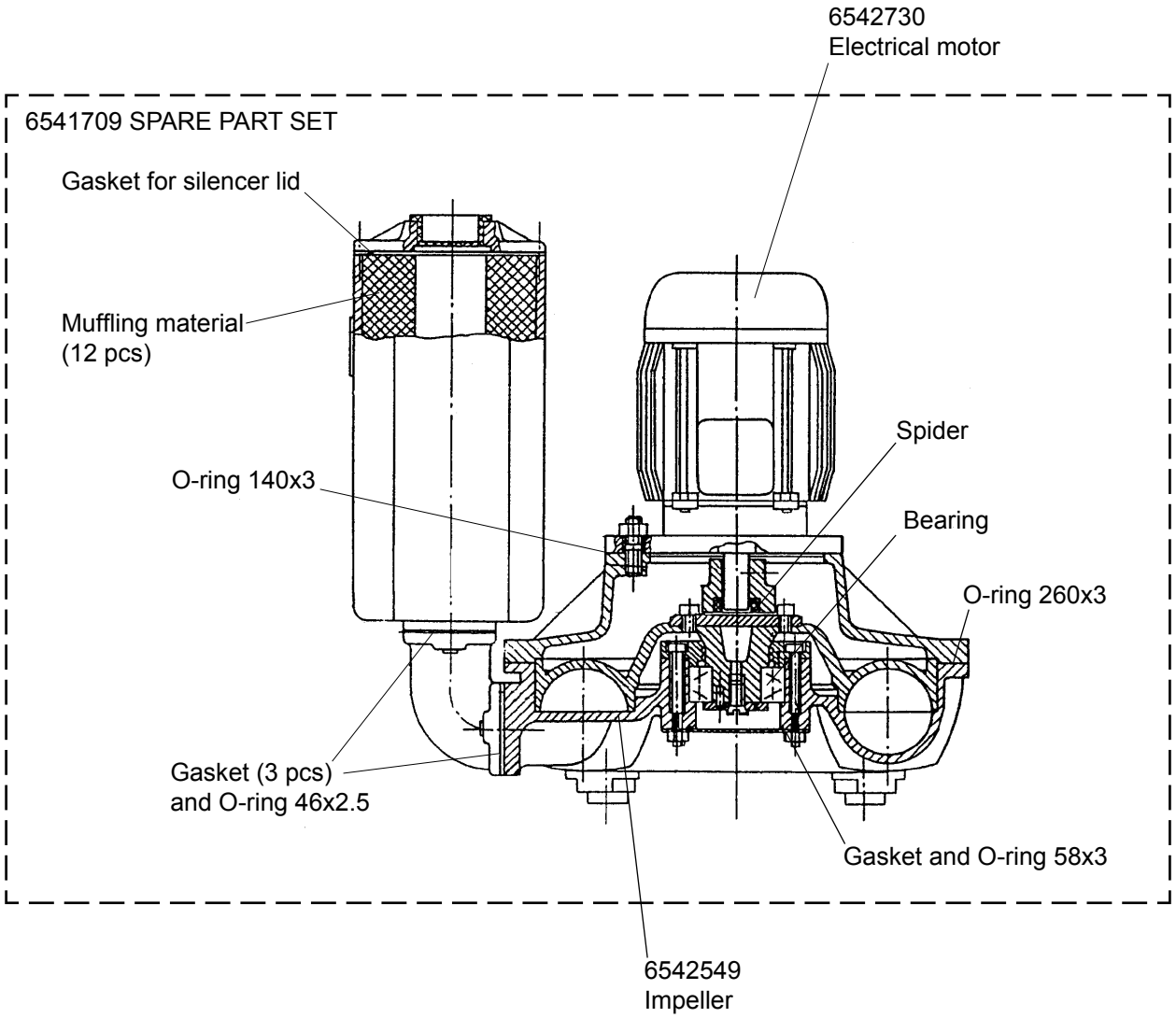

! **NOTE:** Spare parts included in spare part set are not sold separately.

EVAC reserves the right to make alterations to this specification without prior notice.
© Copyright Evac Oy. All rights reserved.