WALRUS PUMP

TPHK Series

Immersible Pump

Better Life
Through Innovation

Content

General Data 03

Performance Range 04

Sectional Drawing 05

Performance Curves/Technical Data

TPHK 2T 06

TPHK 4T 08

TPHK 8T_E - IE3 10

TPHK 12T 12

TPHK Series Immersible Pump

50 Hz

Power: 0.37 - 2.13 kW
Head: Up to 65 M
Flow: Up to 315 L/min
Outlet: 3/4" - 1 1/4"

60 Hz

Power: 0.37 - 2.83 kW
Head: Up to 90 M
Flow: Up to 355 L/min
Outlet: 3/4" - 1 1/4"

Product Features

- Immersible vertical multistage centrifugal pump, self-priming, co-axial pump/motor design, impellers mounted on extended motor shaft. Main working parts made by stainless steel.

Applications

The TPHK Series is vertical multistage centrifugal pump, designed for industrial use, specially for machine tools. It is suitable to carry fluids such as water, coolant, light oil and other clean, non aggressive matters:

- Industrial circulation system
- Washing/cleaning system
- Filtration system

Model Code

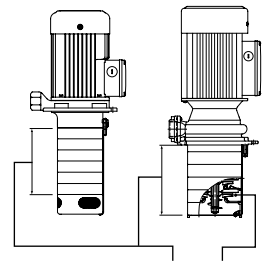

TPHK 2T 6 - 4 S E

- Model type
- Standard capacity m³/h
- Number of Stages
- Number of Impellers
- Stainless steel series
- Drain back tank structure (8T)

Operating Conditions

- Ambient temperature: Max. +40°C
- Liquid temperature range: +0°C ~ +90°C
- Operating pressure: Max. 10 kg/cm²
- Submerged depth: Min. 40 mm

Motor

- Enclosure protection class: IP54
- Insulation class: F.
- Frequency range: 50/60 Hz
- Nominal speed: 2900/3500 rpm
- Voltages code:

Code	PH	50Hz	60Hz
53Q	**3**	200-240/380-440V	-
A3Z*	**3**	200-255/380-440V	200-255/380-480V
A3U*	**3**	200-240/380-415V	200-240/380-440V
A6V*	**3**	200-230/342-415V	220-240/380-480V
A9V*	**3**	200-230/342-380V	220-240/380-440V

* The motor can be used in both 50/60Hz.

Performance Curve, 50Hz

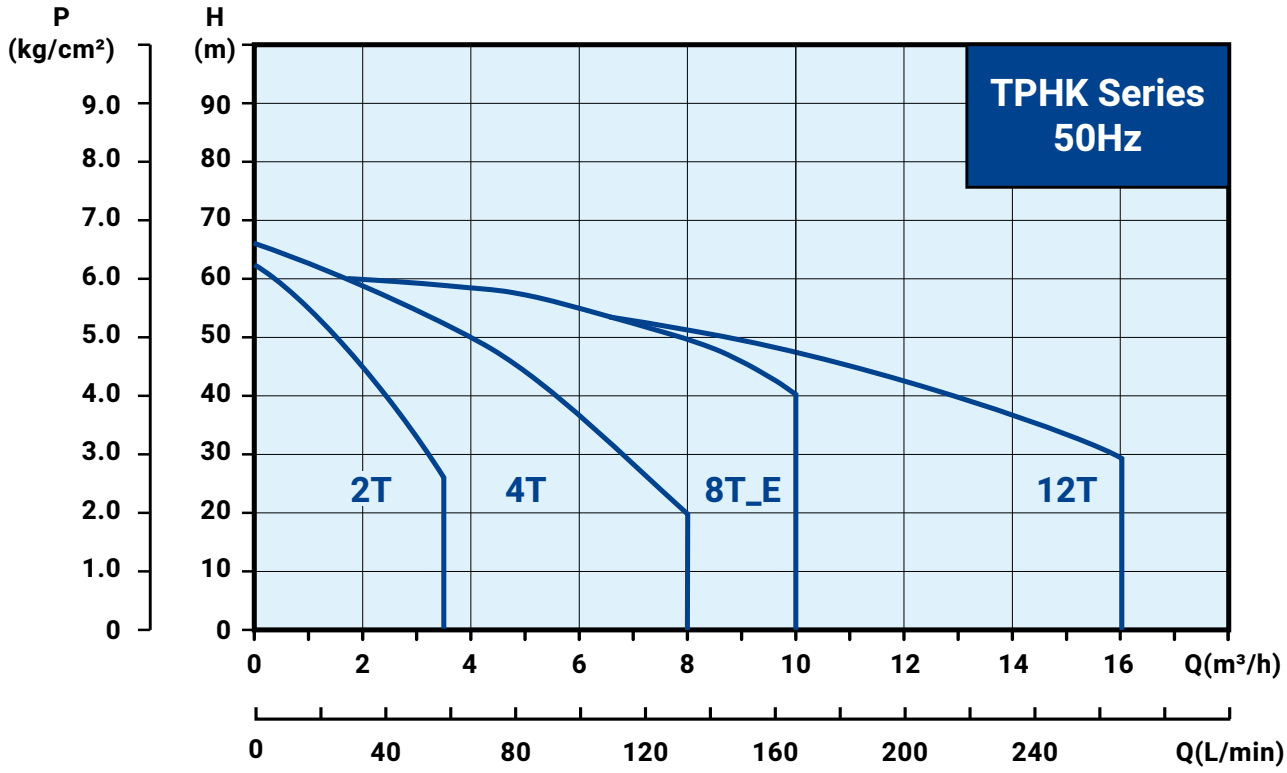

Performance Curve, 60Hz

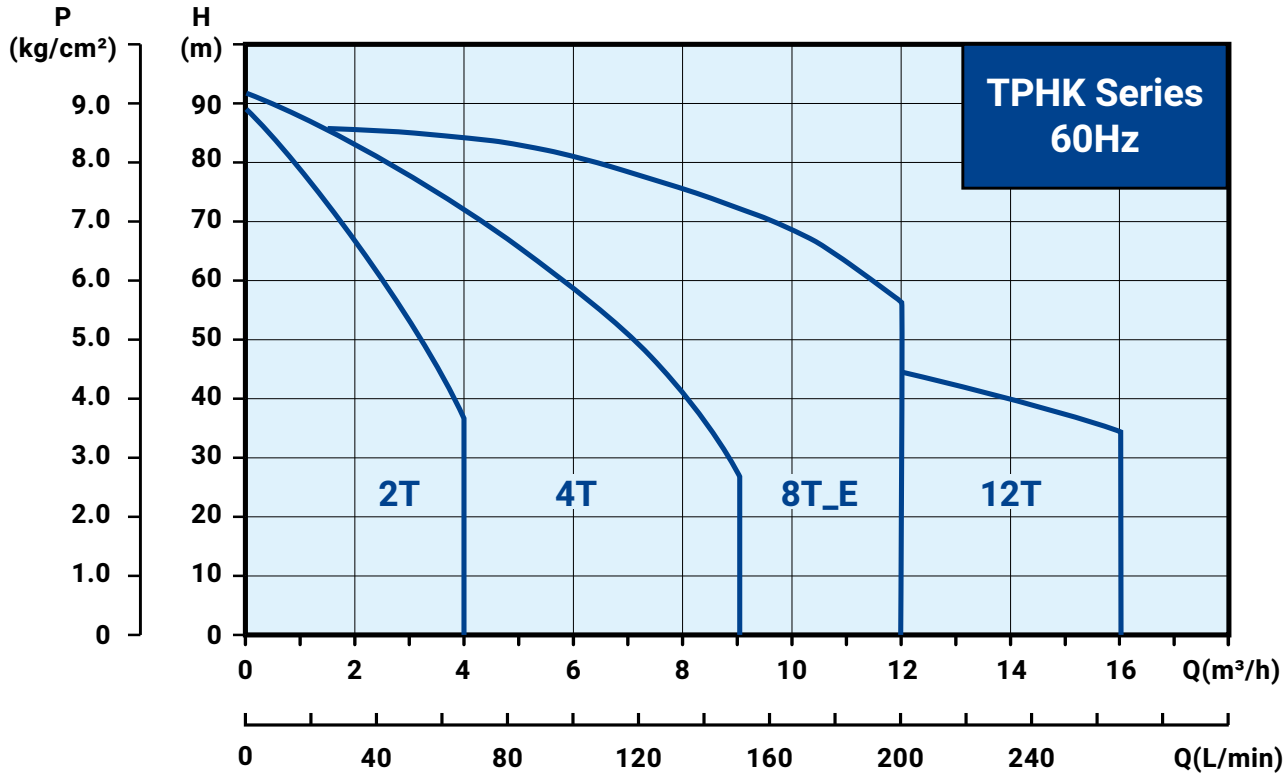

Sectional Drawing

TPHK 2T/4T/8T_E

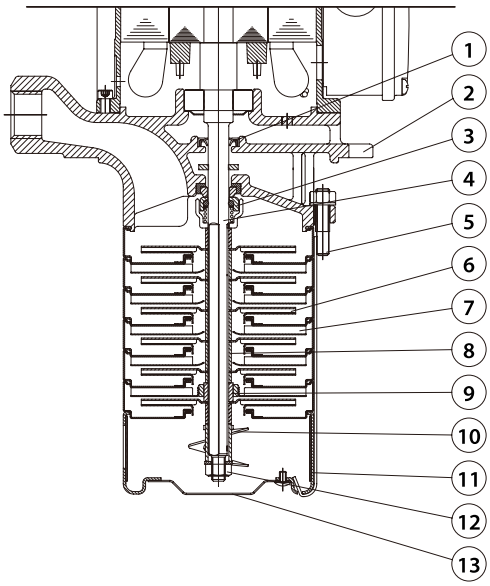

TPHK 12T

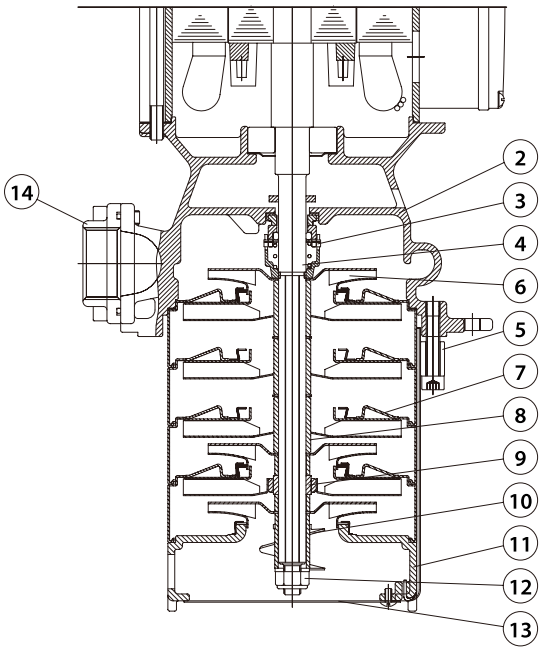

Materials

NO.	Part Name	Material	
		Standard	S series
1	Oil Seal	NBR	
2	Pump Casing	FC 25	SUS 304
3	Mechanical Seal 2T/4T/8T_E	MSSH	MGSH
	Mechanical Seal 12T	HSSH	HGSH
4	Shaft	SUS 304	
5	Strap	SUS 304	
6	Impeller	SUS 304	
7	Intermediate chamber	SUS 304	
8	Sleeve	SUS 304	
9	Bearing	SiC	
10	Priming screw	SUS 304	
11	Suction intercon-nector	SUS 304	
12	Lock Nut	SUS 316	
13	Filter	SUS 304	
14	Flange	SUS 304	

SUS 304 may be replaced by SUS 316, depending on stock availability.

Options on Request

■ Special mechanical seal

(TPHK 2T/4T/8T_E)

Mechanical seal type	Material	
	Stationary Face/ Rotary Face	Cup Gasket & O Ring
MGSH MGSV MGSE	(G)Carbon/ (S)Silicon carbide	(H) HNBR (V) Viton (E) EPDM
MSSH MSSV MSSE	(S)Silicon carbide/ (S)Silicon carbide	

(TPHK 12T)

Mechanical seal type	Material	
	Stationary Face/ Rotary Face	Cup Gasket & O Ring
HGSH HGSV HGSE	(G)Carbon/ (S)Silicon carbide	(H) HNBR (V) Viton (E) EPDM
HSSH HSSV HSSE	(S)Silicon carbide/ (S)Silicon carbide	

Electrical Data

Model	PH ø	Voltage code	Cycle Hz	Volts V	Input kW	Output kW	Ampere A
TPHK2T3-1	3	A3Z	50 60	200-255/380-440 200-255/380-480	0.34 0.37	0.23 0.25	1.6-2.8/1.0-1.5 1.5-1.9/1.0-1.3
TPHK2T3-2	3	A3Z	50 60	200-255/380-440 200-255/380-480	0.45 0.56	0.31 0.38	1.9-2.8/1.2-1.5 2.1-2.2/1.5-1.5
TPHK2T3-3	3	A3Z	50 60	200-255/380-440 200-255/380-480	0.53 0.75	0.36 0.51	2.0-2.8/1.3-1.6 2.6-2.5/1.6-1.6
TPHK2T4-4	3	A3Z	50 60	200-255/380-440 200-255/380-480	0.62 0.91	0.42 0.62	2.2-2.9/1.4-1.7 3.0-2.9/1.7-1.7
TPHK2T5-5	3	A3Z	50 60	200-255/380-440 200-255/380-480	0.70 1.06	0.48 0.72	2.4-3.0/1.4-1.6 3.3-3.0/1.8-1.8
TPHK2T6-6	3	A3Z	50 60	200-255/380-440 200-255/380-480	0.85 1.29	0.58 0.88	3.1-3.6/1.8-2.1 4.0-3.6/2.4-2.4
TPHK2T7-7	3	A3U	50 60	200-240/380-415 200-240/380-440	1.32 1.80	0.90 1.23	4.6-6.7/2.9-3.7 5.6-5.4/3.2-3.2

Dimensions

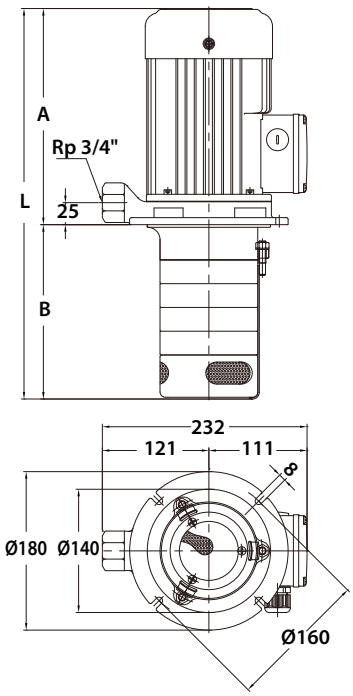

Model	A mm	B mm	L mm	N.W. kg	
TPHK2T3-1	205.5	144	349.5	10.9	30
TPHK2T8-1	205.5	234	439.5	11.9	30
TPHK2T3-2	205.5	144	349.5	11.1	30
TPHK2T5-2	205.5	180	385.5	11.5	30
TPHK2T9-2	205.5	252	457.5	12.3	30
TPHK2T3-3	205.5	144	349.5	11.2	30
TPHK2T4-3	205.5	162	367.5	11.4	30
TPHK2T5-3	205.5	180	385.5	11.6	30
TPHK2T6-3	205.5	198	403.5	11.8	30
TPHK2T8-3	205.5	234	439.5	12.2	30
TPHK2T11-3	205.5	288	493.5	12.6	24
TPHK2T4-4	205.5	162	367.5	11.5	24
TPHK2T6-4	205.5	198	403.5	11.9	30
TPHK2T5-5	253.5	180	433.5	12.7	30
TPHK2T6-5	253.5	198	451.5	13.3	30
TPHK2T6-6	253.5	198	451.5	13.5	24
TPHK2T8-6	253.5	234	487.5	13.9	24
TPHK2T9-6	253.5	252	505.5	14.1	24
TPHK2T10-6	253.5	270	523.5	14.2	24
TPHK2T11-6	253.5	288	541.5	14.4	24
TPHK2T7-7	253.5	216	469.5	13.0	24

Performance Curve, 50Hz

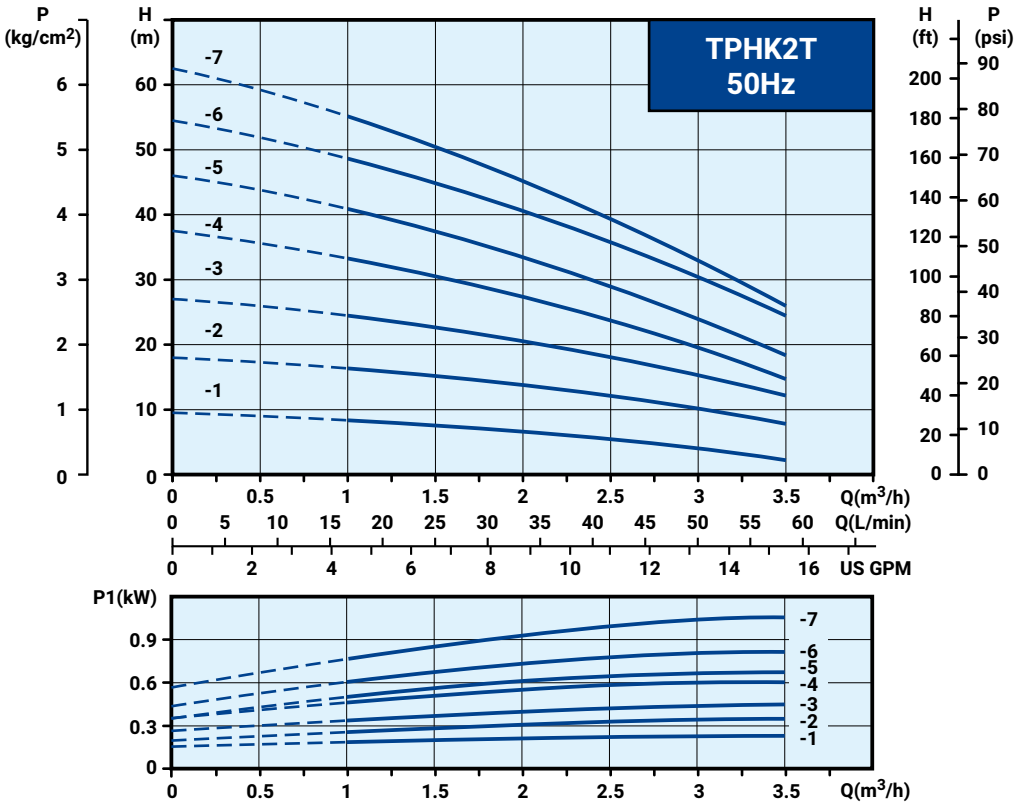

Performance Curve, 60Hz

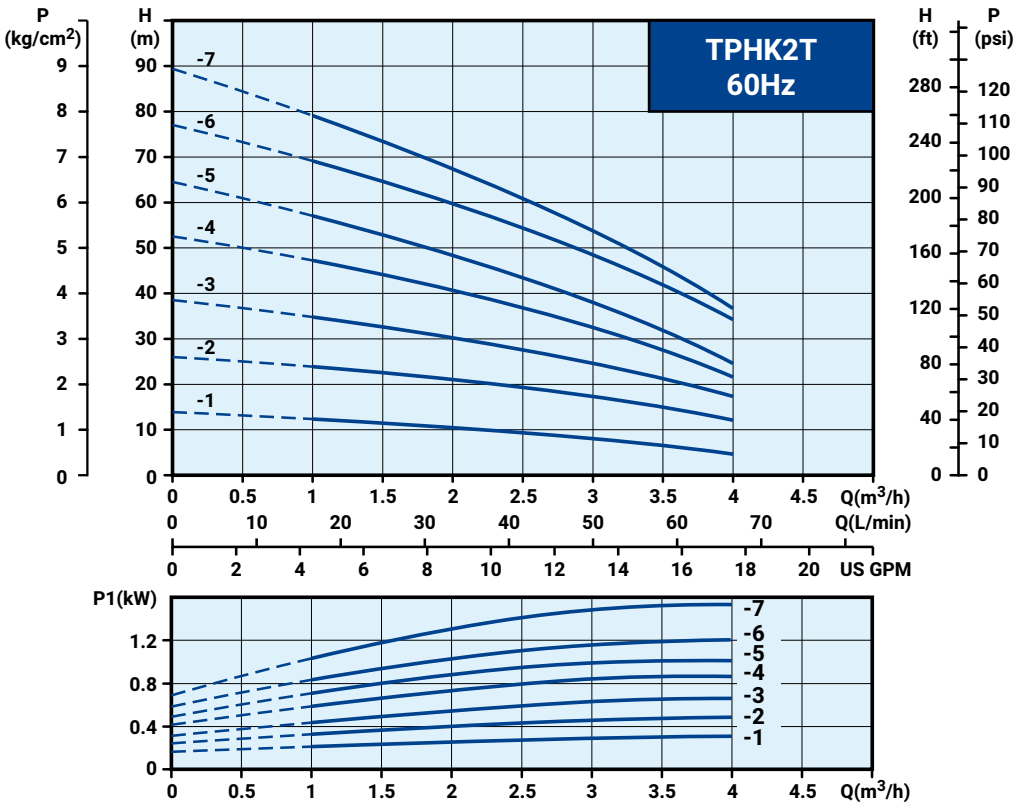

Electrical Data

Model	PH ø	Voltage code	Cycle Hz	Volts V	Input kW	Output kW	Ampere A
TPHK4T2-1	3	A3Z	50 60	200-255/380-440 200-255/380-480	0.57 0.60	0.39 0.41	1.9-2.8/1.2-1.7 2.3-2.3/1.4-1.4
TPHK4T2-2	3	A3Z	50 60	200-255/380-440 200-255/380-480	0.65 0.96	0.44 0.65	2.2-2.9/1.4-1.7 3.0-2.7/1.7-1.7
TPHK4T3-3	3	A3Z	50 60	200-255/380-440 200-255/380-480	0.85 1.29	0.58 0.88	3.1-3.6/1.8-2.1 4.0-3.6/2.4-2.4
TPHK4T4-4	3	A3U	50 60	200-240/380-415 200-240/380-440	1.08 1.62	0.74 1.10	3.4-3.5/2.0-2.0 4.0-5.0/2.9-2.9
TPHK4T5-5	3	A3U	50 60	200-240/380-415 200-240/380-440	1.44 2.10	0.98 1.43	4.9-6.8/3.0-3.8 6.2-6.0/3.5-3.5
TPHK4T6-6	3	A3U	50 60	200-240/380-415 200-240/380-440	1.74 2.40	1.19 1.64	6.3-9.9/4.2-5.5 7.7-7.6/4.5-4.5
TPHK4T7-7	3	A3U	50 60	200-240/380-415 200-240/380-440	2.14 2.80	1.46 1.91	6.9-10.3/4.5-5.8 8.7-8.4/4.9-4.9

Maximum 8 Stages

Dimensions

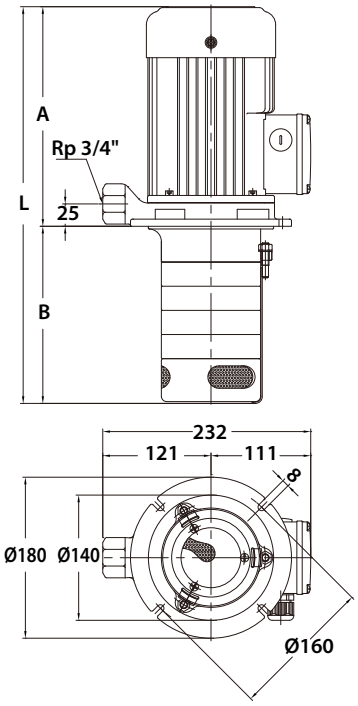

Model	A mm	B mm	L mm	N.W. kg	
TPHK4T2-1	205.5	144	349.5	10.8	30
TPHK4T3-1	205.5	171	376.5	11.0	30
TPHK4T2-2	205.5	144	349.5	11.0	30
TPHK4T3-2	205.5	171	376.5	11.2	30
TPHK4T4-2	205.5	198	403.5	11.4	30
TPHK4T6-2	205.5	252	457.5	11.6	24
TPHK4T3-3	245.5	171	416.5	11.7	30
TPHK4T4-3	245.5	198	443.5	11.9	30
TPHK4T5-3	245.5	225	470.5	12.1	30
TPHK4T6-3	245.5	252	497.5	12.3	24
TPHK4T8-3	245.5	306	551.5	12.7	24
TPHK4T4-4	245.5	198	443.5	13.3	24
TPHK4T5-4	245.5	225	470.5	13.5	24
TPHK4T6-4	245.5	252	497.5	13.7	24
TPHK4T5-5	253.5	225	478.5	13.9	24
TPHK4T8-5	253.5	306	559.5	14.5	24
TPHK4T6-6(50Hz)	253.5	252	505.5	13.1	24
TPHK4T6-6(60Hz)	284	252	536	14.1	24
TPHK4T8-6(50Hz)	253.5	306	559.5	13.6	15
TPHK4T8-6(60Hz)	284	306	590	14.6	15
TPHK4T7-7	284	279	563	14.6	24
TPHK4T8-7	284	306	590	14.8	15

Performance Curve, 50Hz

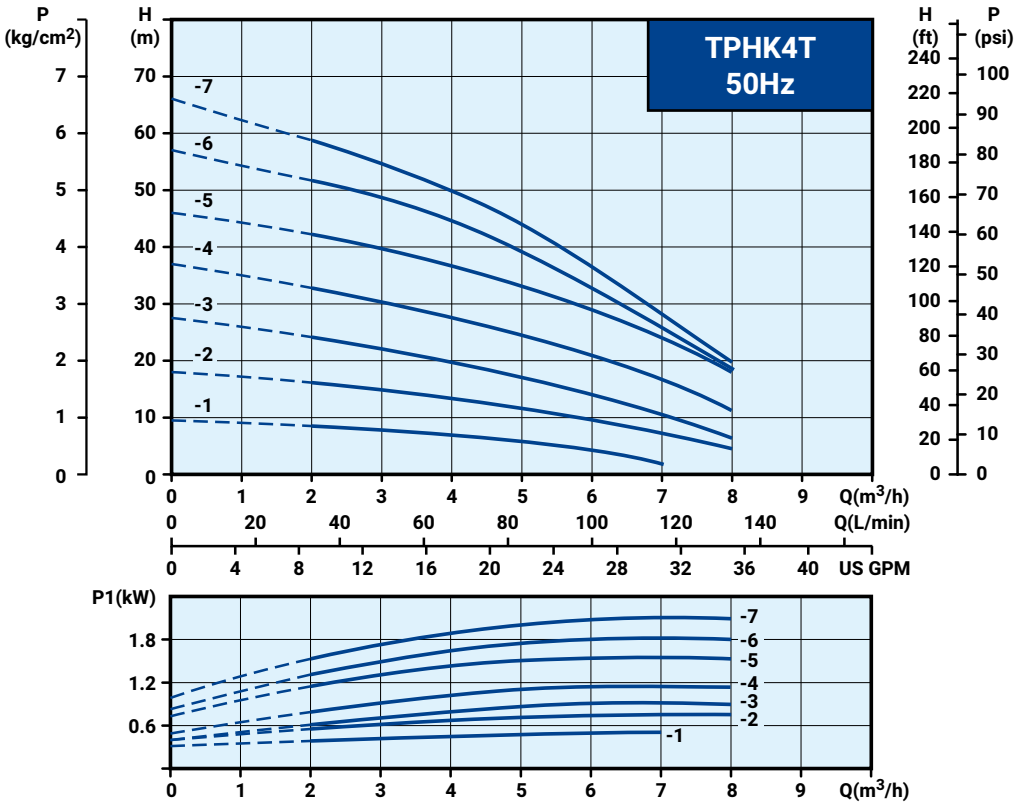

Performance Curve, 60Hz

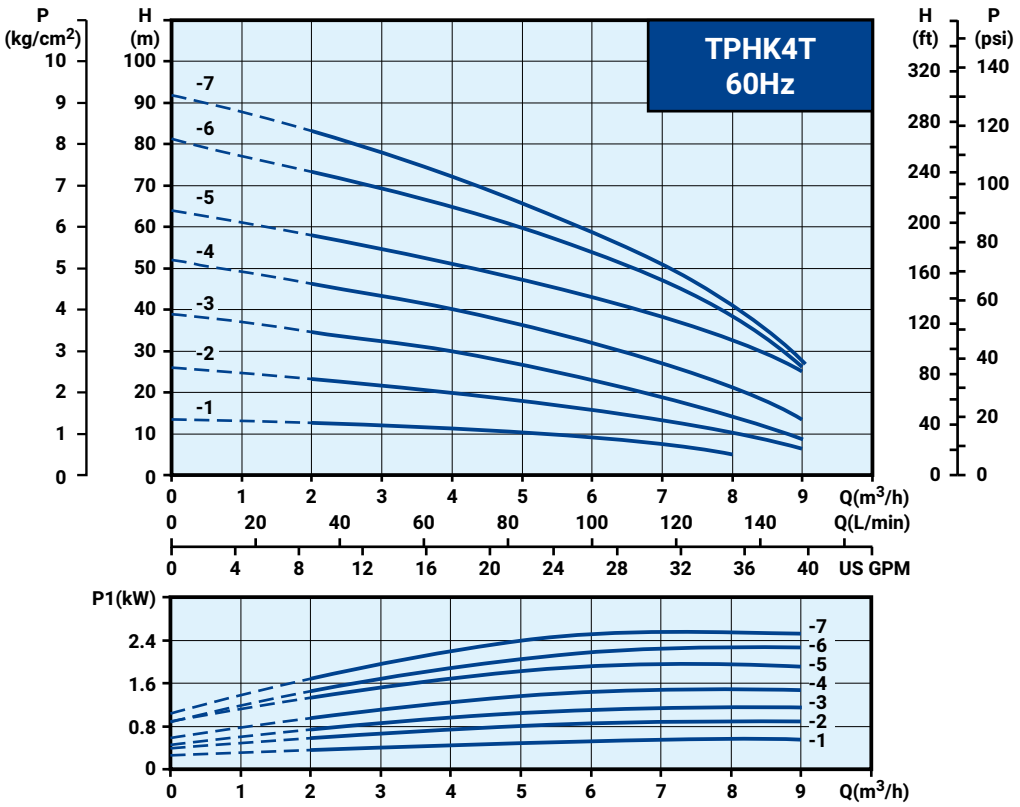

Electrical Data, 50/60Hz

Model	PH Ø	Voltage code	Cycle Hz	Volts V	Output kW	Ampere $I_{1/1}$(A)	Service Factor	Ampere I_{max}(A)
TPHK8T2-2(S)E	3	A6V	50 60	200-230/342-415 220-240/380-480	1.1 1.1	5.2-5.4/3.1-3.4 4.6-4.6/2.8-3.1	1.1 1.4	5.5-5.7/3.3-3.5 6.2-5.7/3.6-3.5
TPHK8T3-3(S)E	3	A9V	50 60	200-230/342-380 220-240/380-440	2.2 2.2	9.5-10.5/5.5-5.6 8.6-8.4/4.9-5.0	1.1 1.5	10.2-10.9/5.9-5.9 12.1-11.2/6.9-6.4
TPHK8T4-4(S)E	3	A9V	50 60	200-230/342-380 220-240/380-440	2.2 2.2	9.5-10.5/5.5-5.6 8.6-8.4/4.9-5.0	1.1 1.5	10.2-10.9/5.9-5.9 12.1-11.2/6.9-6.4
TPHK8T5-5(S)E	3	A9V	50 60	200-230/342-380 220-240/380-440	3.0 3.0	12.2-13.1/7.1-7.1 11.2-10.7/6.4-6.3	1.1 1.3	13.4-14.0/7.9-7.8 14.5-13.3/8.3-7.6
TPHK8T6-6(S)E	3	A9V	50 60	200-230/342-380 220-240/380-440	3.4 3.7	13.4-13.0/7.8-7.4 13.4-12.6/7.7-7.0	1.1 1.3	14.6-13.9/8.5-8.0 16.4-15.1/9.4-8.4

Dimensions

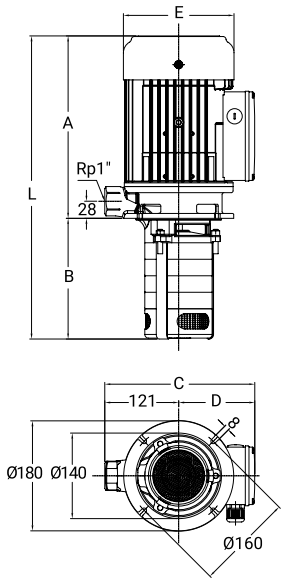

Model	Cycle Hz	L mm	A mm	B mm	C mm	D mm	E mm	N.W. kg	
TPHK8T2-2(S)E	50/60	455	284	171	232	111	145	17	24
TPHK8T3-3(S)E	50/60	519	321	198	244	124	181	24	24
TPHK8T4-4(S)E	50/60	546	321	225	244	124	181	25	24
TPHK8T5-5(S)E	50/60	598	346	252	244	124	181	28	15
TPHK8T6-6(S)E	50/60	645	366	279	244	124	181	31	15

Performance Curve, 50Hz

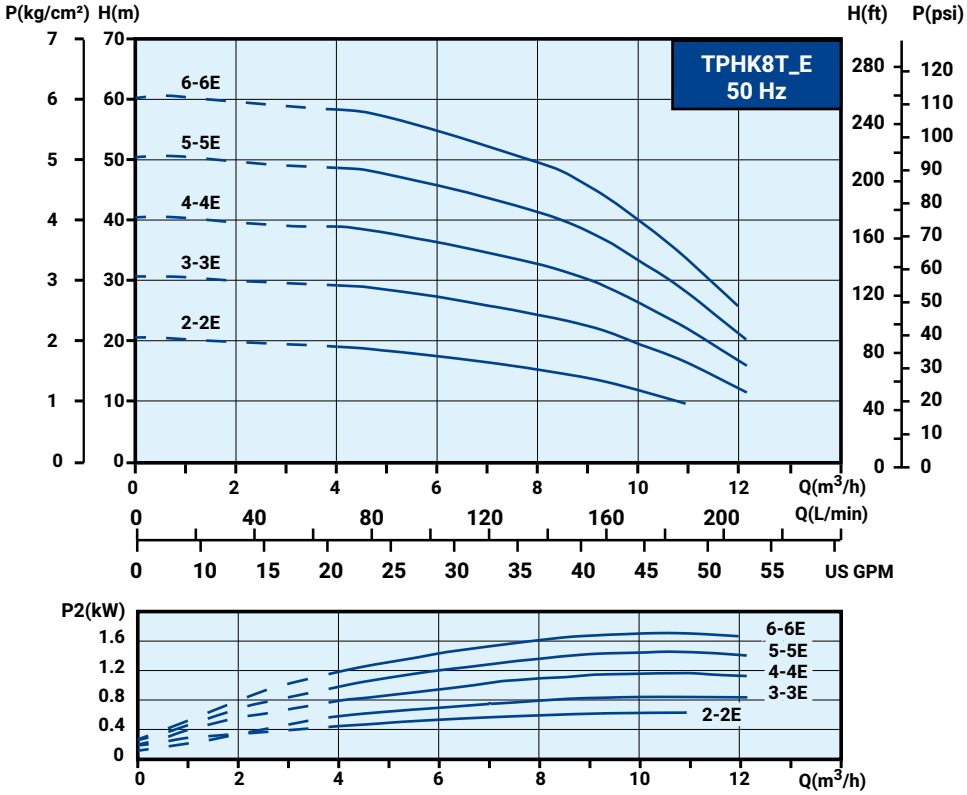

Performance Curve, 60Hz

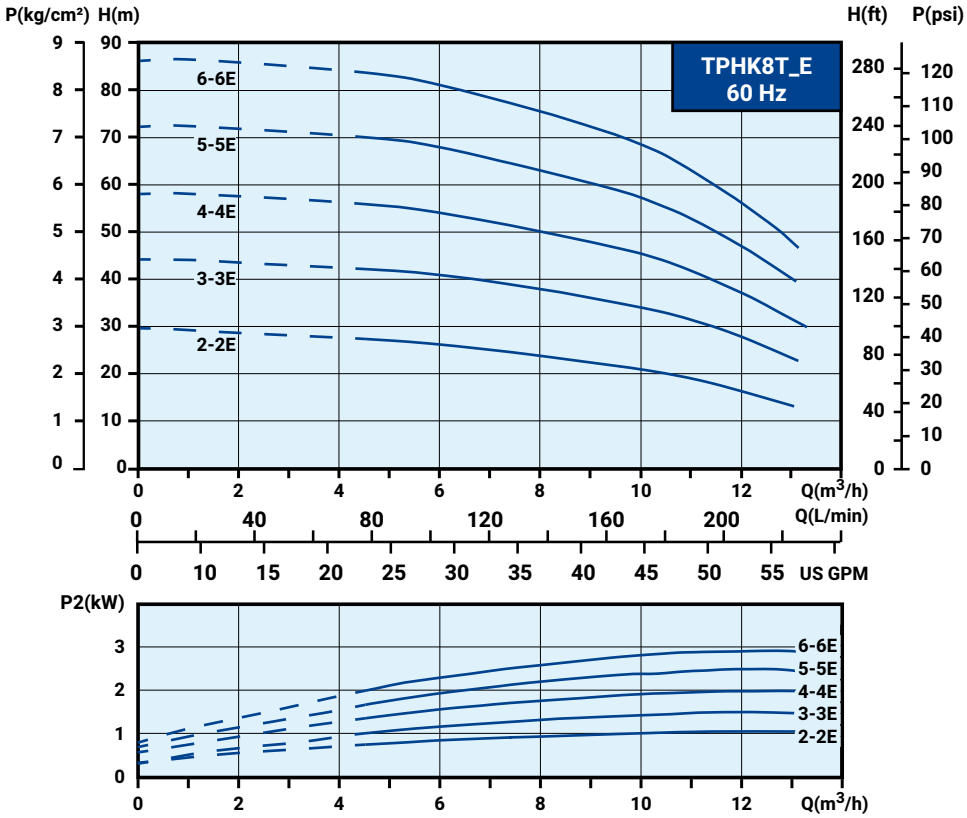

Electrical Data

Model	PH Ø	Voltage code	Cycle Hz	Volts V	Input kW	Output kW	Ampere A
TPHK12T6-1	3	A3Z	50 60	200-255/380-440 200-255/380-480	1.40 2.00	0.95 1.36	4.5-6.3/2.7-3.4 6.6-5.8/3.6-2.9
TPHK12T6-2	3	A3U	50 60	200-240/380-415 200-240/380-440	3.12 4.15	2.13 2.83	9.6-13.9/6.4-8.4 12.8-12.4/7.1-7.4
TPHK12T6-3	3	53Q	50	200-240/380-440	3.83	2.61	11.6-11.5/6.5-7.2

Maximum 9 Stages

Dimensions

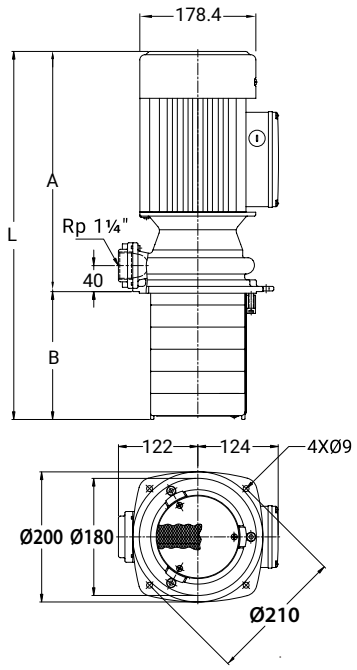

Model	A mm	B mm	L mm	N.W. kg	
TPHK12T6-1	369	196.5	565.5	27.0	15
TPHK12T6-2	369	196.5	565.5	29.0	15
TPHK12T9-2	369	298.5	667.5	30.5	15
TPHK12T6-3	369	196.5	565.5	30.0	15
TPHK12T9-3	369	298.5	667.5	31.5	15

Performance Curve, 50Hz

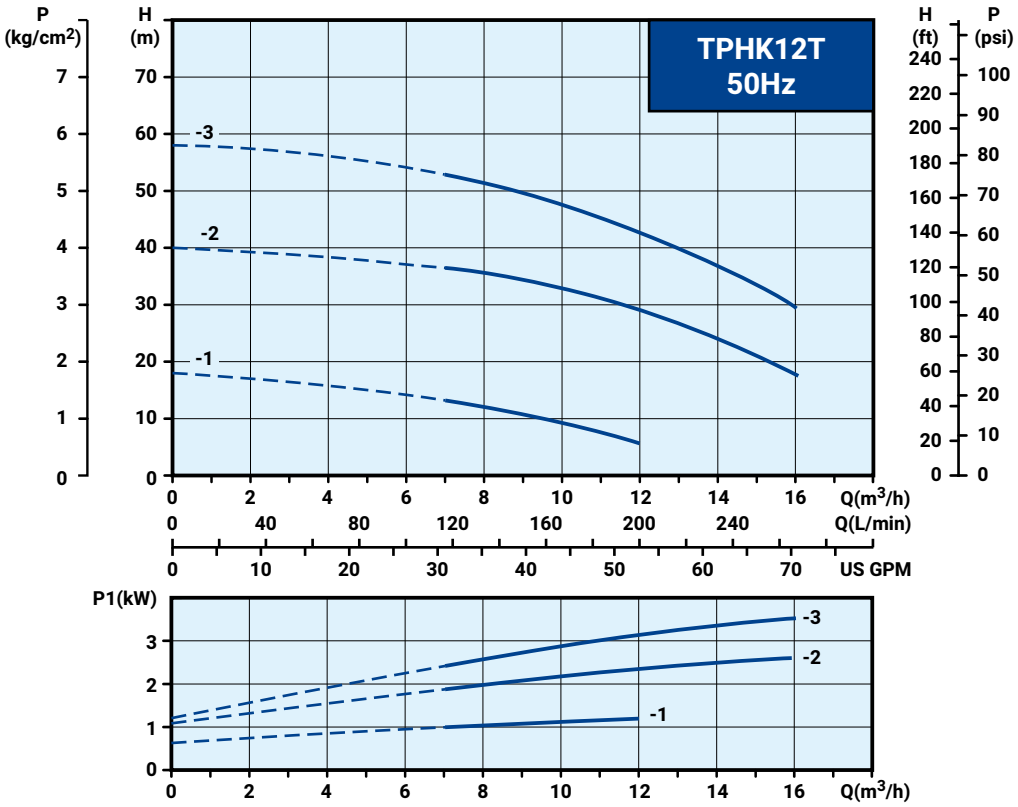

Performance Curve, 60Hz

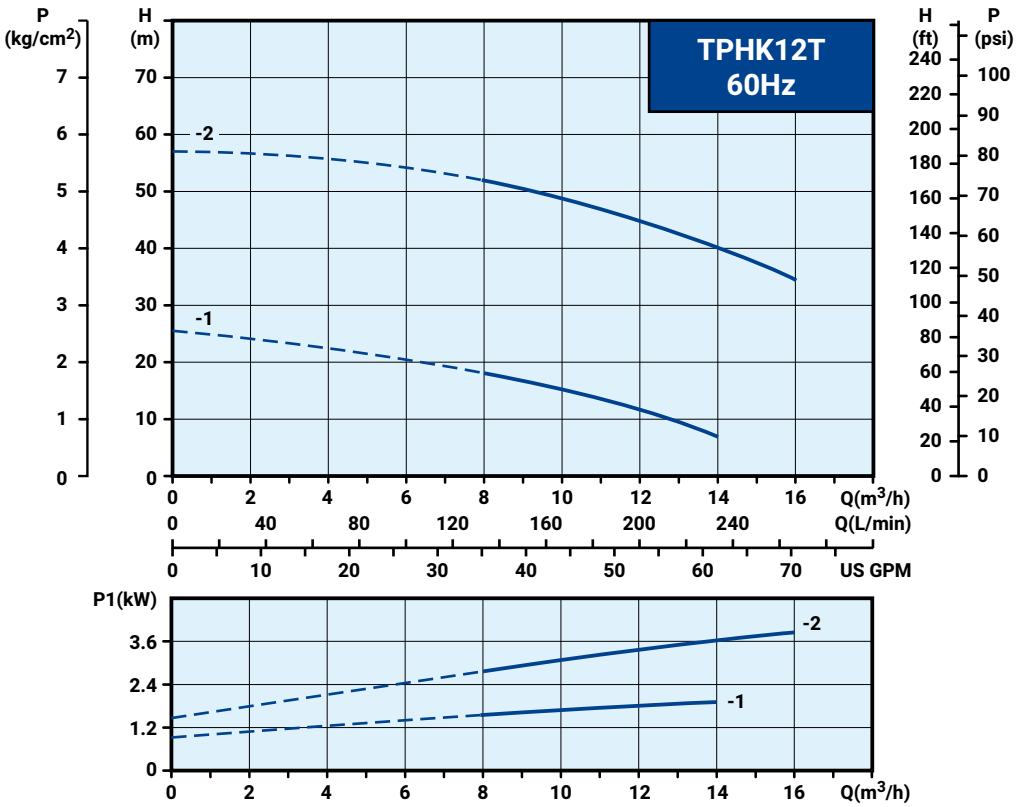

WALRUS PUMP