KEOFITT®
WORLD LEADERS IN STERILE SAMPLING™

KEOFITT® ASEPTIC SAMPLING BAG™ (PAT.PEND.) ITEM NO. 120500TC

GENERAL

The Keofitt Aseptic Sampling Bag is a sterile, pre-irradiated product supplied in a sealed PE-bag. The product is to be removed from its sterile bag only just before use.
The sterile condition and the possibility to steam the flowpath in a closed circuit enable the user to extract a truly representative aseptic sample from a liquid process line sampling point in a convenient way.
The Keofitt Aseptic Sampling Bag is the ultimate sampling bag solution based on Keofitt's renowned high quality and ultra hygienic sampling valve design.
The unique design allows the connection between the sampling valve and the sampling bag to be steam sterilised in place, SIP.

The Aseptic Sampling Bag is intended for collecting and easy storage of samples from true aseptic samples for microbiological and chemical analysis.

The Aseptic Sampling Bag is a single-use product.

The product to be sampled should have a maximum viscosity of 1000 cP and should not contain particles larger than 3 mm in diameter. Products with higher viscosity may be sampled, only will it take longer. Make sure not to exceed 1.5 bar(g) at the valve inlet.

FEATURES

- SIP test report available
- Single-use product
- Supplied sterilized by Gamma-irradiation in sealed outer PE bag
- Mini sanitary clamp connection (Keofitt W9 quick connect also available)
- Pinch clamp to seal sample in bag
- Secondary port with septum for extracting a sample of the sample or for injecting a substance into the sample. Needle max. ø0.8mm and max. 5 penetrations. Secondary port also fitted with luer lock fittings (male and female) for secure and sterile connection to relevant equipment in a Laminar Air Flow (LAF) bench.



TECHNICAL DATA

STEAMING (SIP):

Connect to steam generator supplying saturated stram at max. 1.5 bar(g)/21.5 psi.
Nominal pressure 1.0 bar(g) corresponding to 121°C (Allow SIP for 60 sec. Flow steam to drain, don't use steamtrap.)

SAMPLING/FILLING:

Allow the bag to be filled by slowly opening the sampling valve and leave it open until required sample volume is obtained. Do never exceed the nominal volume of the bag, as it will eventually blast (safety margin = approx. 3 x nominal volume).

STERILITY:

The sampling bag's fluid path has been validated according to the AAMI TIR 33 with a log-6 Sterility Assurance Level (SAL)

SAMPLE TEMPERATURE:

Up to 90°C (194°F) sample temperature provided delicate handling, support in a tray and leave for cooling to below 60°C (140°F) before further handling

STORAGE AND SHELF LIFE:

The sampling bags are individually packed in a sealed PE bag and delivered in a carton box with a PE liner containing 50 pieces. Shelf life is 3 years following product date printed on the carton box.
Store in original packaging at 50 – 94°F (10 – 34°C) and less than 80% humidity

CERTIFICATES:

Each delivery may be accompanied with a Certificate of Conformity (CoC) covering Sterility, Product conformity, Gamma Irradiation, GMP, FDA regulations 21 CFR part 820, ISO 13485:2003 Quality Standards etc.
For the bag film in constant contact with the sample the CoC covers USP 88 Class VI Biocompatibility, USP 87 Cytotoxicity test, Physiochemical test for Plastic USP 661, Endotoxine test (USP 85) and Extractables test.

SIZES:

The sampling bags are available in the following sizes (part number): 50 ml (120050TC), 250 ml (120250TC), 500 ml (120500TC), 1000 ml (121000TC) & 2000 ml (122000TC)

ISO 9001 : 2015 Management System Certification
BUREAU VERITAS Certification Denmark A/S

KEOFITT®
WORLD LEADERS IN STERILE SAMPLING™

Pos.	Part Name	Material
1	3/4” MIni-Clamp	PP
2	Tube	Silicone
3	3-way valve house	PC
4	3-way valve piston	PP / TPE
5	Pinch Clamp	PP
6	Tube	Silicone
7	Luer Cap (septum)	ABS / PC / Polyisoprene (septum). Compliant with ISO-594. Latex free
8	Sampling Bag	178 µm co-extruded laminated LLDPE/EVOH/PA for high barrier properties. See next page for further information.

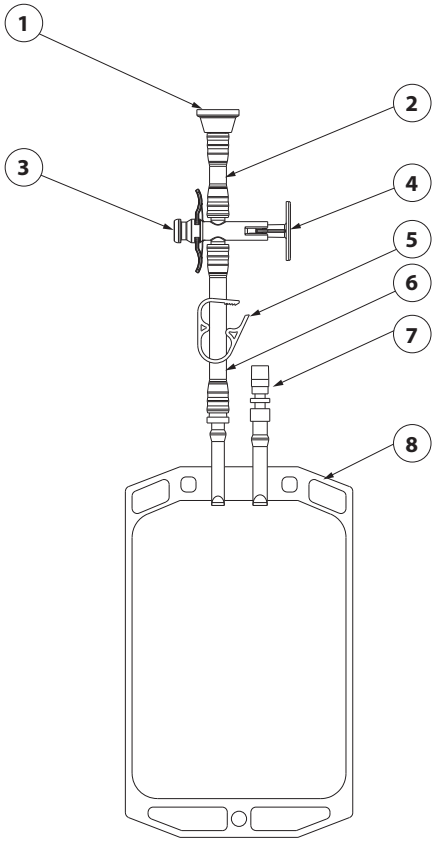

FILM CHARACTERISTICS

POLYETHYLENE SINGLE USE CONTAINER

The bag film is a 5 layer 7 mil/ 178 µm co-extrusion film which provides barrier and durability.





BIOCOMPATIBILITY

USP Acute Systemic Injection Test	Pass	USP <88>
USP Intracutaneous Injection Test	Pass	USP <88>
USP Intramuscular Implantation Test	Pass	USP <88>
USP MEM Elution Method	Non Cytotoxic	USP <87>
Physiochemical Test for Plastics	Pass	USP <661>

PHYSICAL DATA

Water Vapor Transmission Rate	(g/m^2/24hrs)	0.68	ASTM F-1249
	($g/100in^2$/24hrs)	0.044	
Carbon Dioxide Transmission Rate	(cc/m^2/24hrs)	2.25	ASTM F-2476
	($cc/100in^2$/24hrs)	0.145	
Oxygen Transmission Rate	(cc/m^2/24hrs)	4.31	ASTM D-3985
	($cc/100in^2$/24hrs)	0.278	

	Average Force	Average MOE	Average Elongation	
Tensile	13.98 kg 30.79 lbs	3565 bar 51670 psi	611%	ASTM D 882-02
	Min force	Average Force	Max Force	
Tear Resistance	2.21 kg 4.86 lbs	2.36 kg 5.20 lbs	2.47 kg 5.45 lbs	ASTM D1004-07
Puncture Resistance	6.31 kg 13.89 lbs	6.94 kg 15.29 lbs	7.77 kg 17.12 lbs	FTMS 101C

This film is Class VI, non-animal origin, and is supported by a complete testing/documentation package.

The bag is manufactured by Advanced Scientifica Inc., USA