VMR
VMR-OTN
VMR 6 bar

Safety solenoid valves for gas
Fast opening and fast closing type
DN8 … DN150

VMR
VMR-OTN
VMR 6 bar

Safety solenoid valves for gas
Fast opening and fast closing type

Contents

Description ……..	2
Features ……..	2
Functioning and application …….	3
Technical specifications …….	4
Gas flow chart (pressure drop) …….	6
Ordering information …….	8
Special versions and optionals …….	9
Design, installation and servicing	10
Standards and approvals …….	11

Description

The VMR type valve is a fast opening single-stage solenoid valve, normally closed (open when energized). This type of device is suitable for air or gas blocking and releasing controls, required in gas power burners, atmospheric gas boilers, industrial kilns and others gas consuming appliances.

Features

The valves are made of aluminium alloy diecast (or hot-pressed brass for OTN versions), with a wide range for inlet/outlet connections from DN 8 (1/4”) up to DN 150 (6”).

Sealings are made of NBR-based rubber certified for use with gas (EN 549).

Suitable for use with air and non-aggressive gases included in the 1, 2 and 3 families (EN 437). Special versions suitable for aggressive gases, free of non-ferrous metals and with FPM seals.

Pipe connections meet Group 2 and backpressure sealing is compliant with Class A, according to EN161 requirements.

The whole range can be provided in Ex-proof execution, for use in Zones 2 and 22, according to 2014/34/EU Directive (ATEX).

The valve is open only when energized: if, for any reason, power supply goes down, the valve closes immediately (intrinsic safe).

Suitable for heavy-duty cycle operation and qualified for continuous service (100% ED).

Equipped with flow rate adjustment (except brass models and 4”-5”-6”).

An incorporated fine mesh filter protects the valve seat and disc as well as downstream components and prevents dirty contamination (except brass models and 6 bar).

Provided with G1/8 connection to fit a proof of closure switch or a visual indicator.

Provided with 1/4" pressure gauge on two sides in the inlet chamber (except brass models), to connect manometers, pressure switches, leakage detectors or other gas equipment. Models from 2 ½” (DN65) are provided with gauges also in the outlet chamber.

The coils are provided with terminal box or with ISO 4400 plug. Both systems are provided with suitable cable gland to avoid water and dirty contamination.

All components are designed to withstand any mechanical, chemical and thermal condition occurring during typical service. Effective impregnation and surface treatments have been used to improve mechanical sturdiness, sealing and resistance to corrosion of the components.

Valves are 100% tested by computerized testing machineries and are fully warranted.

Functioning and application

The VMR type valve is a safety shutting device using auxiliary power supply.

When it is de-energized, the spring pushes on the seal disc, keeping the gas passage closed. Now, the inlet chamber is under the gas line pressure which forces on the disc, increasing the closing function and improving the seal.

When the coil is powered the valve opens rapidly, against the strength of the spring and gas pressure. The flow may be adjusted using the regulating screw on the top (see the installation and service instructions).

If the power supply is shut off, the valve rapidly closes, interrupting the gas flow.

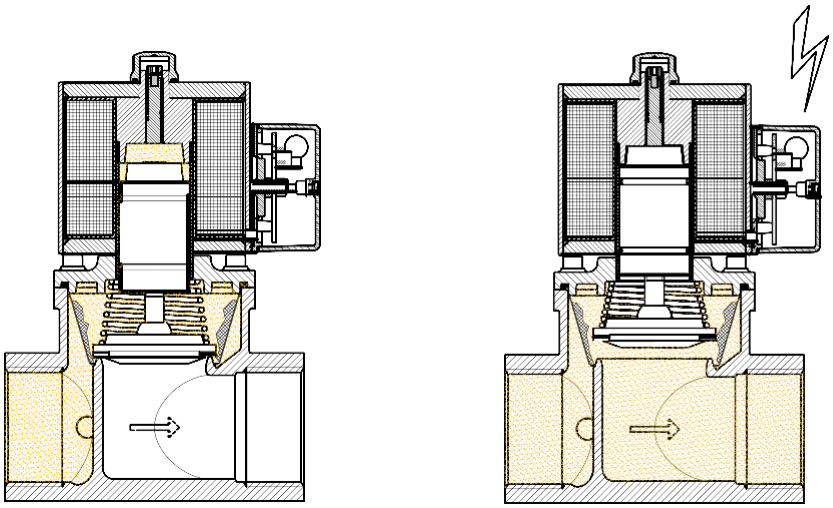

Fig.1

This kind of valve is normally installed as safety and regulating device in gas trains, for industrial applications and gas firing systems.

Figure 2 shows an example of installation.

1 = Ball valve
2 = Filter
3 = Pressure regulator
4 = Tightness control
5 = Minimum gas pressure switch
6 = Valve position visual indicator
7 = Fast opening solenoid valve
8 = Slow opening solenoid valve
9 = Tightness control pressure switch
10 = Closed position indicator switch
11 = Burner pressure gauge
12 = Push button valve

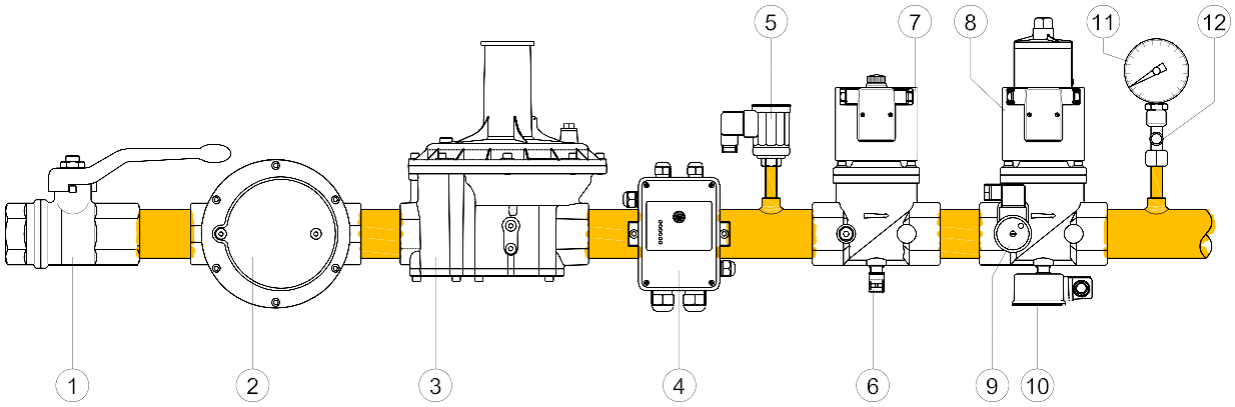

Fig.2

Technical specifications

Tab. 1

Connections	Internal threaded ISO 7-1 from Rp1/4 to Rp2½". or ANSI-ASME B1.20 from 1/4" NPT to 2½" NPT Flanged ISO 7005 PN16 from DN40 to DN150 or ANSI-ASA-ASME B16.5 class 150 from 2" to 6"
Voltage rating	230 VAC 50/60 Hz 120 VAC 50/60 Hz 110 VAC 50/60 Hz 24 VAC/DC 12 VAC/DC
Voltage tolerance	-15% to +10%
Ambient temperature **Media temperature**	-15°C to +60°C (+5°F to +140°F)
Max. operating pressure	200 mbar (3 psig) 360 mbar (5 psig) 500 mbar (7 psig) 6 bar * (90 psig)
Body test pressure	1 bar (15 psig) 9 bar * (130 psig)
Closing time	< 1 second
Opening time	< 1 second
Gas strainer	600 µm (0.02 in) (except brass models and 6 bar)
Enclosure	IP54 (NEMA 3) optional IP65 with cable (NEMA 4)
Cable gland	M20x1,5 for terminal box PG 9 for ISO plug
Wires cross-section	2,5 mm² max. (AWG 12) for terminal board 1,5 mm² max. (AWG 14) for ISO plug
Electrical safety	Class I (EN 60335-1)
Coil winding insulation	Class H (200°C, 392°F)
Coil thermal resistance	Class F (155°C, 311°F)
Materials in contact with gas	Aluminium alloy, brass, stainless steel, plated steel, Anaerobic adhesive, Nitrile rubber (NBR), Fluor elastomer (FPM) Polytetrafluoroethylene (PTFE)

Tab. 2

Power-consumption		**200 mbar (3 psig)**					**360 mbar (5 psig)**					**500 mbar (7 psig)**					**6 bar (90 psig)**				
[W]		230V	120V	110V	24V	12V	230V	120V	110V	24V	12V	230V	120V	110V	24V	12V	230V	120V	110V	24V	12V
1/4" OTN	O	12	15	12	12	12	-	-	-	-	-	-	-	-	-	-	-	-	-	-	-
	H	12	15	12	12	12	-	-	-	-	-	-	-	-	-	-	-	-	-	-	-
3/8"-1/2" OTN	O	16	20	16	16	16	-	-	-	-	-	-	-	-	-	-	-	-	-	-	-
	H	16	20	16	16	16	-	-	-	-	-	-	-	-	-	-	-	-	-	-	-
3/8"-1/2"	O	25	20	25	20	20	-	-	-	-	-	20	20	20	-	-	20	20	20	20	-
	H	25	5	25	20	20	-	-	-	-	-	20	5	20	-	-	20	5	20	20	-
3/4"-1"	O	25	35	30	30	30	-	-	-	-	-	35	45	35	-	-	35	45	35	30	-
	H	25	9	30	30	30	-	-	-	-	-	35	11	35	-	-	35	11	35	30	-
1¼"-1½"-2"	O	120	80	80	65	65	-	-	-	-	-	180	180	180	-	-	180	180	180	65	-
	H	30	20	20	65	65	-	-	-	-	-	45	45	45	-	-	45	45	45	65	-
2½"-3"	O	180	180	180	160	-	240	240	240	-	-	-	-	-	-	-	240	240	240	-	-
	H	45	45	45	15	-	70	70	70	-	-	-	-	-	-	-	70	70	70	-	-
4"	O	280	280	280	210	-	320	320	320	-	-	-	-	-	-	-	320	320	320	-	-
	H	70	70	70	20	-	80	80	80	-	-	-	-	-	-	-	80	80	80	-	-
5"- 6"	O	320	360	320	-	-	360	360	360	-	-	-	-	-	-	-	-	-	-	-	-
	H	80	90	80	-	-	90	90	90	-	-	-	-	-	-	-	-	-	-	-	-

O – opening power consumption H - holding power consumption

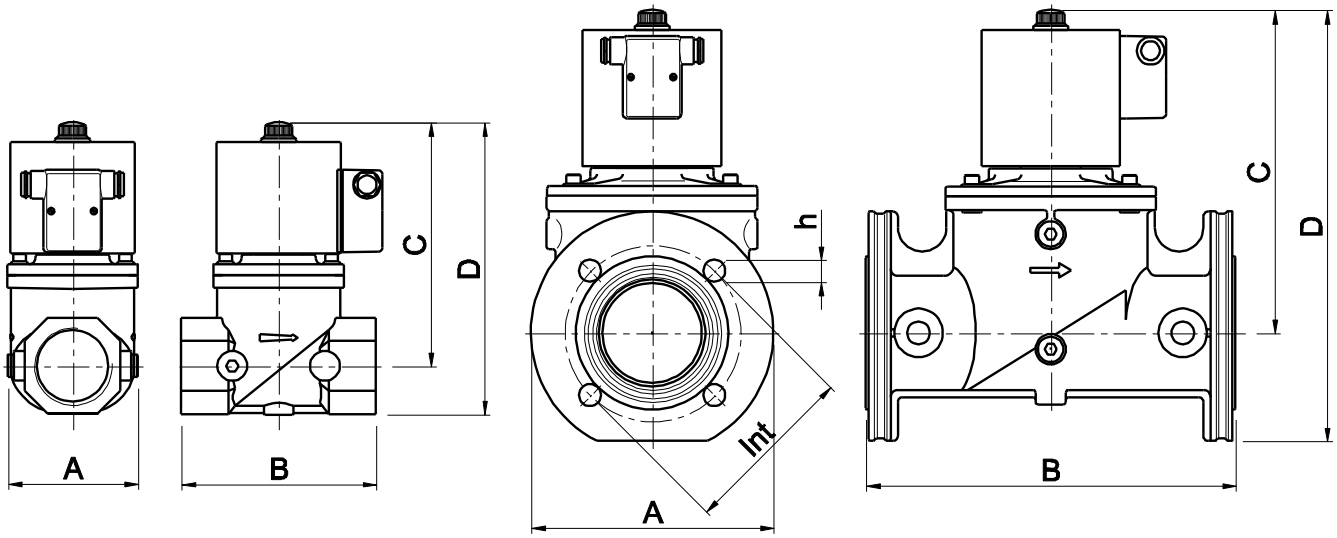

Fig.3

Tab. 3

Material and connections		Overall dimensions [mm] [in]						Gewicht [Kg] [lbs]
CuZn	AlSi	A	B	C	D	int	h	
Rp1/4		**30**	**46**	**66,5**	**75**			**0,27**
1/4" NPT		1,18	1,81	2,62	2,95			0,6
Rp3/8		**30**	**58**	**95**	**110**			**0,4**
3/8" NPT		1,18	2,28	3,74	4,33			0,9
Rp1/2		**30**	**58**	**95**	**110**			**0,4**
1/2" NPT		1,18	2,28	3,74	4,33			0,9
	Rp3/8	**88**	**77**	**126**	**142**			**1,4**
	3/8" NPT	3,46	3,03	4,96	5,59			3,1
	Rp1/2	**88**	**77**	**126**	**142**			**1,4**
	1/2" NPT	3,46	3,03	4,96	5,59			3,1
	Rp3/4	**88**	**96**	**145**	**168**			**2,5**
	3/4" NPT	3,46	3,78	5,71	6,61			5,5
	Rp1	**88**	**96**	**145**	**168**			**2,5**
	1" NPT	3,46	3,78	5,71	6,61			5,5
	Rp1¼	**120**	**153**	**191**	**224**			**5,7**
	1¼" NPT	4,72	6,02	7,52	8,82			12,6
	Rp1½	**120**	**153**	**191**	**224**			**5,7**
	1½" NPT	4,72	6,02	7,52	8,82			12,6
	Rp2	**106**	**156**	**195**	**234**			**6**
	2" NPT	4,17	6,14	7,68	9,21			13,2
	Rp2½	**180**	**218**	**254**	**300**			**11,6**
	2½" NPT	7,09	8,58	10,00	11,81			25,6
	DN40 [1]	**165**	**196**	**195**	**271**	**110**	**4x18**	**7,4**
	DN50 [1]	**165**	**196**	**195**	**271**	**125**	**4x18**	**7,4**
	2" ANSI [1]	6,50	7,72	7,68	10,94	4,75	4x¾	16,3
	DN65	**200**	**305**	**266**	**355**	**145**	**4x18**	**14**
	2½" ANSI	7,87	12,01	10,47	13,98	5,50	4x¾	30,9
	DN80	**200**	**305**	**266**	**355**	**160**	**8x18**	**14**
	3" ANSI	7,87	12,01	10,47	13,98	6,00	4x¾	30,9
	DN100	**250**	**350**	**352**	**452**	**180**	**8x18**	**33**
	4" ANSI	9,84	13,78	13,86	17,80	7,50	8x¾	72,8
	DN125	**310**	**460**	**430**	**600**	**210**	**8x18**	**58**
	5" ANSI	12,20	18,11	16,93	23,62	8,50	8x⅞	127,9
	DN150	**310**	**460**	**430**	**600**	**240**	**8x23**	**60**
	6" ANSI	12,20	18,11	16,93	23,62	9,50	8x⅞	132,3

([1]) Flanged connection as optional kit

Gas flow chart
(Pressure drop)

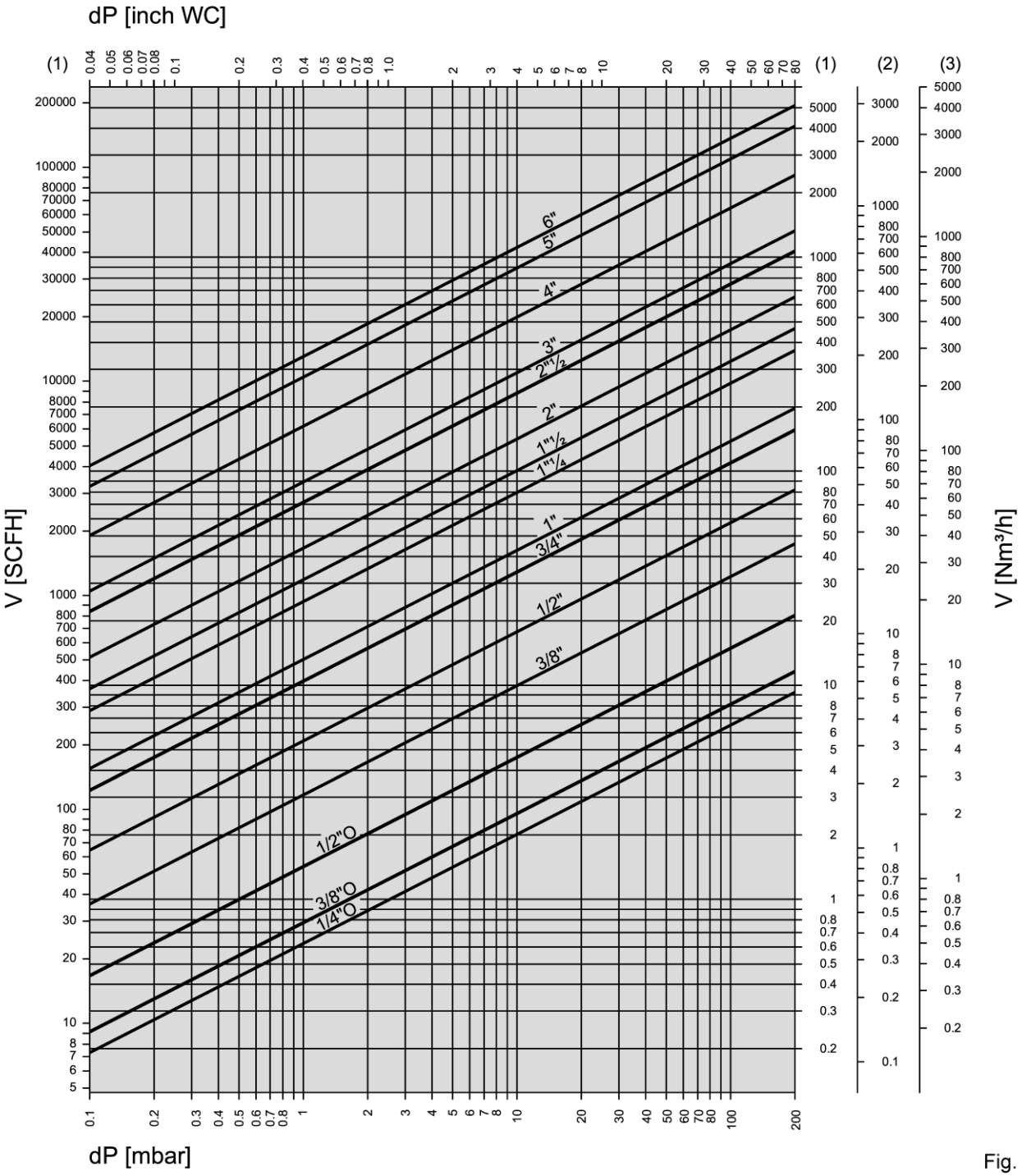

Fig. 4

Formula of conversion from air to other gases

$$V_{GAS} = k \cdot V_{AIR}$$

Tab. 4

Gas type	Specific gravity ρ [Kg/m³]	$k = \sqrt{\frac{125}{\rho_{GAS}}}$
(1) Natural gas	0,80	1,25
(2) LPG	2,08	0,77
(3) Air	1,25	1,00

15°C, 1013 mbar, dry

When the flow read on the diagram is referred to operating pressure instead of standard conditions, the pressure drop Δp read on the diagram must be multiplied for the factor:
(1+ relative pressure in bar)

Example:

In the 2" solenoid valve with an air flow of 80 Nm^3/h there is a pressure drop Δp = 5 mbar.
If we consider that 80 m^3/h is the flow at 200 mbar of inlet pressure, then the pressure drop to be consider is:

Δp = 5x(1+0,2) = 6 mbar

Normally, pressure drop and flow rate for the valves are read from the gas flow diagram.
However, the valves can also be chosen in accordance with the characteristic "Kvs value" which is shown in table 2.
The selection of the valve requires the calculation of the Kv under the operating conditions.

Considering only subcritical pressure drops:

$$\Delta p < \frac{p_1}{2}$$

Kv can be calculated with the formula:

$$Kv = \frac{V}{514}\sqrt{\frac{\rho(t+273)}{\Delta p \cdot p_2}}$$

where

V = flow rate [Nm^3/h]
Kv = flow factor [m^3/h]
ρ = density [Kg/m^3]
p_1 = absolute inlet pressure [bar]
p_2 = absolute outlet pressure [bar]
Δp = differential pressure p_1-p_2 [bar]
t = media temperature [°C]

To the Kv value calculated from operating conditions we add an allowance of 20%, to obtain the minimum Kvs value which the valve should have:

Kvs > 1,2 Kv

Kvs	1/4"O	3/8"O	1/2"O	3/8"	1/2"	3/4"	1"	1¼"	1½"	2"	2½"	DN65	DN80	DN100	DN125	DN150
m^3/h	0,55	0,7	1,3	2,9	4,8	9,5	12	22	29	40	65	65	80	148	250	315

Valve must be selected considering the following:

- Pressure drops Δp ≤ 0,1p_1 are recommended and Δp > p_1/2 are always unadvisable
- Flow velocities w ≤ 15 m/s are recommended and w > 50 m/s are always unadvisable.

Ordering information

Tab.6

VMR	1	-5	N	.B	J

Valve type

Size

01OTN	1/4" brass body
0OTN	3/8" brass body
1OTN	1/2" brass body

0	3/8"	**6**	2"
1	1/2"	**7**	2½"
2	3/4"	**8**	3"
3	1"	**9**	4"
35	1¼"	**93**	5"
4	1½"	**95**	6"

Max. operating pressure

-2	200 mbar (3 psig)
-3	360 mbar (5 psig)
-5	500 mbar (7 psig)
-60	6 bar (90 psig)

Connection

none	Rp internal thread / ISO flange
N	US market version (FM approved - NPT thread / ANSI flange)
T	Threaded (Rp 2½" only)

Supply voltage

none	230V 50/60Hz (120V 50/60Hz with "N" connection)
B	110V 50/60Hz
C	24V AC/DC
D	12V AC/DC

Special versions

L	Low power (when not standard)
P	Proof of closure (POC) for US market only
J	Biogas
K	Coke oven gas (COG)
Y	NPT thread / ANSI flange

Tab. 7

		200 mbar (3 psig)					360 mbar (5 psig)					500 mbar (7 psig)					6 bar (90 psig)				
		230V	120V	110V	24V	12V	230V	120V	110V	24V	12V	230V	120V	110V	24V	12V	230V	120V	110V	24V	12V
Threaded	1/4"O	●[1,2]		●[1,2]	●[1,2]	●[1,2]															
	3/8"O	●[1,2]		●[1,2]	●[1,2]	●[1,2]															
	1/2"O	●[1,2]		●[1,2]	●[1,2]	●[1,2]															
	3/8"	●[1]		●[1]	●	●						●	●	●			●	●	●	●	
	1/2"	●[1]		●[1]	●	●						●	●	●			●	●	●	●	
	3/4"	●	●	●	●	●						●	●	●			●	●	●	●	
	1"	●	●	●	●	●						●	●	●			●	●	●	●	
	1"¼	●	●	●	●	●						●	●	●			●	●	●	●	
	1"½	●	●	●	●	●						●	●	●			●	●	●	●	
	2"	●	●	●	●	●						●	●	●			●	●	●	●	
	2"½	●	●	●	●[2]		●	●	●								●	●	●		
Flanged	DN 40	●[3]	●[3]	●[3]	●[3]	●[3]						●[3]	●[3]	●[3]			●[3]	●[3]	●[3]		
	DN 50	●[3]	●[3]	●[3]	●[3]	●[3]						●[3]	●[3]	●[3]			●[3]	●[3]	●[3]		
	DN 65	●	●	●	●[2]		●	●	●								●	●	●		
	DN 80	●	●	●	●[2]		●	●	●								●	●	●		
	DN 100	●[2]	●[2]	●[2]	●[2,4]		●[2]	●[2]	●[2]								●[2]	●[2]	●[2]		
	DN 125	●[2]	●[2]	●[2]			●[2]	●[2]	●[2]												
	DN 150	●[2]	●[2]	●[2]			●[2]	●[2]	●[2]												

● Available

([1]) Provided with encapsulated coil and ISO 4400 plug
([2]) Without flow adjustment
([3]) Flanged connections with optional kit
([4]) Class B

Special versions

- The models with aluminium body can be supplied in special versions for aggressive gases such as biogas (version J from 3/8" to 6") and COG (version K from 3/8" to 4"), they are free of non-ferrous metals and provided with special seals.
- The valves are available with a proof-of-closure switch (POC), comply with NFPA 86 requirements (version P from 3/4” to 4”). A factory adjusted SPDT switch inside an enclosure mounted on the bottom of the valve, provides an electrical signal indicating the valve position. A two-coloured LED gives also a visual indication of the valve position (Red = valve open, Green = valve closed).
- All the valves with terminal box can be supplied with a special electronic board which provides full power for the opening stage, then it switches to low power consumption for the holding stage (standard from DN32 to DN150).

Optionals

- Additional G1/4 gauges in the outlet chamber: on request for the sizes 1”¼, 1”½ and 2” (standard from DN65 to DN150).
- G1/8 connection on the bottom to fit a closed position indicator switch (PCS) or visual indicator (VI): on request from 3/4" to 2" (standard from DN65 to DN150).
- Enclosure class can be increased up to IP65. The valves will be provided with a sealed terminal box and cable set.
- All the valves can be provided with a special cable gland and Ex-proof marking for use in Zones 2 and 22, according to 2014/34/EU Directive (ATEX):

Category	II 3 G,D
protection mode	Ex nA IIA T4 Gc X Ex tc IIIB T135°C Dc X or Ex tc IIIC T135°C Dc X (IP65)

- All the valves can be provided with transparent cover and LED which lights up when electrical power is supplied.
- All the valves can be provided with electrical connection made by a standard plug ISO 4400 (optional with LED indicator).
- All the valves can be provided with anodizing housing or epoxy coating to withstand the aggressive environments.
- The threaded model 2” NPT can be provided with flanged connections using an optional kit.

Design, installation and servicing

To assure a proper and safe operation, as well as a long service life of the valve, consider the following recommendations during the design of the system where the valve will be installed:

- ✓ Ensure that all the features of your system comply with the specifications of the valve (gas type, operating pressure, flow rate, ambient temperature, electrical voltage, etc.).
- ✓ Valve may be mounted with coil in horizontal or vertical position, not upside down. Coil may be oriented 360 degrees in any direction.
- ✓ In the event of vertical pipe, the flow direction should be from bottom to top.
- ✓ After removing the end caps make sure no foreign body will enter into the valve during handling or installation (e. g. swarf or excessive sealing agent).
- ✓ A gas filter should be always installed upstream the valve.
- ✓ Ensure that installing area is protected from rain and water splashes or drops.
- ✓ Perform leak and functional tests after mounting (max. testing pressure 1,5 Pmax).
- ✓ The continuous service (100% ED) causes inevitable coil heating, depending on working environment. Never install the valve close to walls or other equipment. To improve the coil cooling, install the valve allowing free air circulation.
- ✓ Perform maintenance according to service instructions at least once a year (most often for aggressive gases).
- ✓ Due to seals aging, to ensure safe operation, we recommend the valve replacement after 10 years from the date of manufacture stamped on the product.
- ✓ This control must be installed in compliance with the rules in force.
- ✓ Make sure all works are performed by qualified technicians only and in compliance with local and national codes.
- ✓ To prevent product damage and dangerous situations, read carefully the instructions supplied with the product before use.

Standards and approvals

The product complies with the essential requirements of the following European Directives and their amendments:

2016/426/EU (Gas Appliances Regulation) CE-Reg.-No. **0063AQ1350**
2014/68/EU (Pressure Equipment Directive) CE-Reg.-No. **PED/0497/3136/16**
2014/34/EU (ATEX) when shown upon the product
2014/30/EU (Electromagnetic Compatibility)
2014/35/EU (Low Voltage Directive)
2011/65/EU (RoHS II)

The product complies with the Technical Regulations TP TC 004/2011-016/2011-020/2011-032/2013 of Russia, Belarus and Kazakhstan.

Declaration of Conformity: **№ RU Д-IT.PA01.B.08271/18**

The product is approved for Australia, certificate **GMK 10624** issued by IAPMO R&T Oceana on the basis of standard AS 4629.

The valves meet the requirements of functional safety of electrical systems according to the European standard IEC EN 61508 and are certified for systems up to SIL3.

Certificate No.: **C-IS-722161852**

The product is suitable for applications comply with NFPA 86 (Class 7400).

Factory Mutual Approval Identification: **0003061781**
(*) Notice: special version applies

Quality Management System is certified according to UNI EN ISO 9001.