Change-Over Valves

Seetru Limited

for compressed air or gases | *cryogenic & liquefied gas* | *refrigeration* | *hydrogen*

COV10 / COV13 / COV30

Solutions for plant and process efficiency

Change-over valves (sometimes referred to as selector valves or three-way valves) enables the switching of flow from one safety valve to another. Typically used where plant shutdown is impossible or undesirable for process, engineering or commercial reasons. With change-over valves it is possible to switch over between parallel safety valves without interrupting operation, so that maintenance work can be carried out on each safety valve in turn. Seetru change-over valves in combination with our safety valves provide the best solution for plant safety and efficiency. Seetru products are widely recognised for their exceptional quality and reliability.

Features

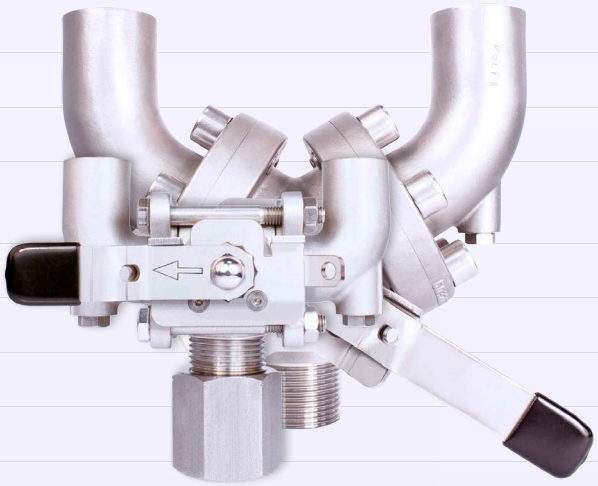

- Patented Design
- Lubricant Free Operation
- Can be fitted with a Bursting Disc
- Lockable handle (optional padlock available)
- Designed for ease of maintenance
- Option to degrease for Oxygen service
- Impossible to isolate both safety valves
- Adjustable Spindle Gland
- Robust Construction
- Compact and easy to use design
- Designed in accordance with BS EN 378
- Pressure drops with 10.0mm for COV10 bore SRV & 18.0mm for COV30 (in accordance with BS EN 13136)
- Ventable outlets for safe removal of Safety Valves
- Seat leakage EV 12266-1 Rate A
- Available with a wide range of fittings and adaptors
- Optimised using Computational Fluid Dynamics (CFD)

Fluid Mahcanics

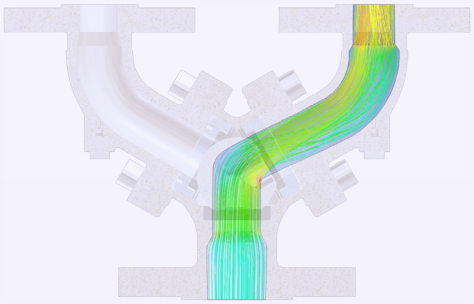

The Seetru Change-Over Valves were designed and developed using Computational Fluid Dynamics (CFD) in order to simulate and optimise the flow of the fluids through the valve.

Specifications: COV10

System Connections	½” to 1” BSP, BSPT & NPT
Valve Connectiond	½” NPT or 3/4” BSP (with or without orientators)
Change-Over Valve Kv	10.0 (Cv= 11.5)
Materials of Construction	Stainless Steel
Seat Materials	25% Carbon filled P.T.F.E.
Temperature Range	-196°C to +200°C
Max Design Pressure	75 bar
Material Certifiation	BS EN ISO10204 3.1 Pressure Retaining Parts (Optional Extra)
Safety Valve Orifice Size	Up to 10mm (Full Lift Type)
Maximum Safety Valve Set Pressure	75 bar

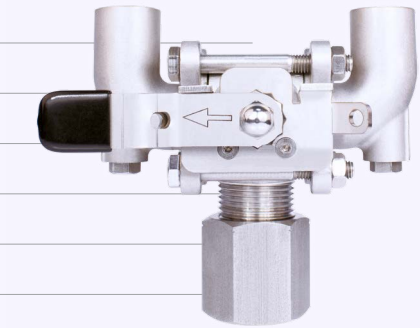

Specifications: COV13

System Connections	Please contact Seetru for information
Valve Connections	Please contact Seetru for information
Materials of Construction	Stainless Steel with Mild Steel or Stainless Steel Internals
Seat Materials	Elastomer P.T.F.E
Maxium Safety valve Set Pressure	65.0 bar
Temperature Range	-30 °C to 200 °C (subject to seal material)

Specifications: COV30

System Connections	1” to 1-1/2” BSP, BSPT, NPT, CL150 to CL600 & PN16 to PN100
Valve Connections	¾” to 1” BSP, BSPT, NPT (with or without orientators), CL150 to CL600 & PN16 to PN100
Change-Over Valve Kv	30
Materials of Construction	CF8M/316/1.4401
Seat Materials	25% Carbon filled P.T.F.E.
Temperature Range	-196°C to +200°C
Max Design Pressure	CL600 or PN100
Material Certifiation	BS EN ISO10204 3.1 Pressure Retaining Parts (Optional Extra)
Safety Valve Orifice Size	Up to 18mm (Full Lift Type)
Maximum Safety Valve Set Pressure	100 bar

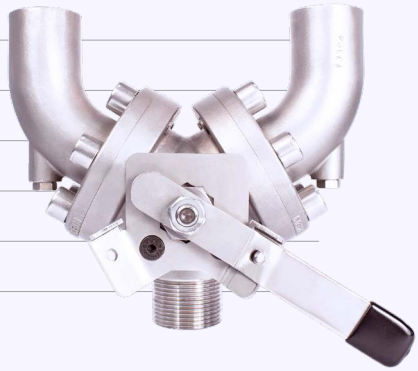

Operation Instructions: COV10 / COV30

1	Unlock handle if locking device fitted (recommended).
2	Starting in a motion away from the duty SRV, rotate handle through 180° (COV10) or 120° (COV10), either clockwise or anticlockwise dependent uponstart starting position.
3	Once fully rotated, lock in position if locking device fitted (recommended).
4	If the now standby SRV is to be remove: with caution, un-tighten vent nut of standby Change-over arm by 1 to 2 revolutions to exhaust trapped fluid from change-over arm.
5	Once trapped fluid has de-pressurised, re-tighten vent plug with a tightening torque of 3.0 Nm.
6	Remove the standby SRV.
7	The user may plug the vacant outlet if desired, however sufficient safety procedures (for example Lock out Tag out) must be in place to prevent inadv inadvertent change over, thus rendering the system un-protected against excessive pressure. If the outlet is plugged, vent arm of pressure, as previously described, prior to removal.

Fittings, Adaptors and Connections

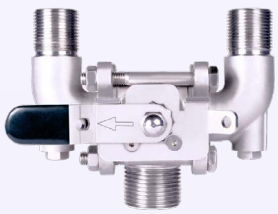

The Seetru COV30 Flanged Change-Over Valve

- The Seetru COV10 and COV30 Change-Over Valves can be supplied with a range of fittings and adaptors to provide compatibility with a large variety of systems.
- The COV30 is also available with flanged connections (A or PN).