BRECON
Cologne
Germany

BRECON
smart vibration technology

BRECON external vibrator - BOSCH series

Type: 18 100 202

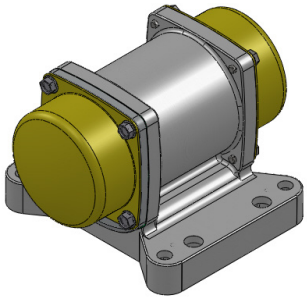

Technical Data

Centrifugal force [kN]	1,2 (adjustable)
Working moment [kgcm]	2,4
Frequency [Hz]	50
Rotational speed [rpm]	3.000
Voltage 3 ~ [V]	220-265/380-440
Power [kW]	0,15
Nominal current [A]	0,47/0,27
Protection	IP 65
Weight [kg]	4,7
Comments	without cable

Dimensions

External dimensions [mm] L x B x H	198 x 165 x 125	
Length of the base g [mm] High of the base h [mm] Width of the base e [mm]	140 25 165	
Mounting pattern [mm] Distance between bolts l Distance between bolts b Diameter of the drills d	 115 135 4x Ø10,5	 65 140 4x Ø13
Heigth of the shaft m [mm]	78	

Schema

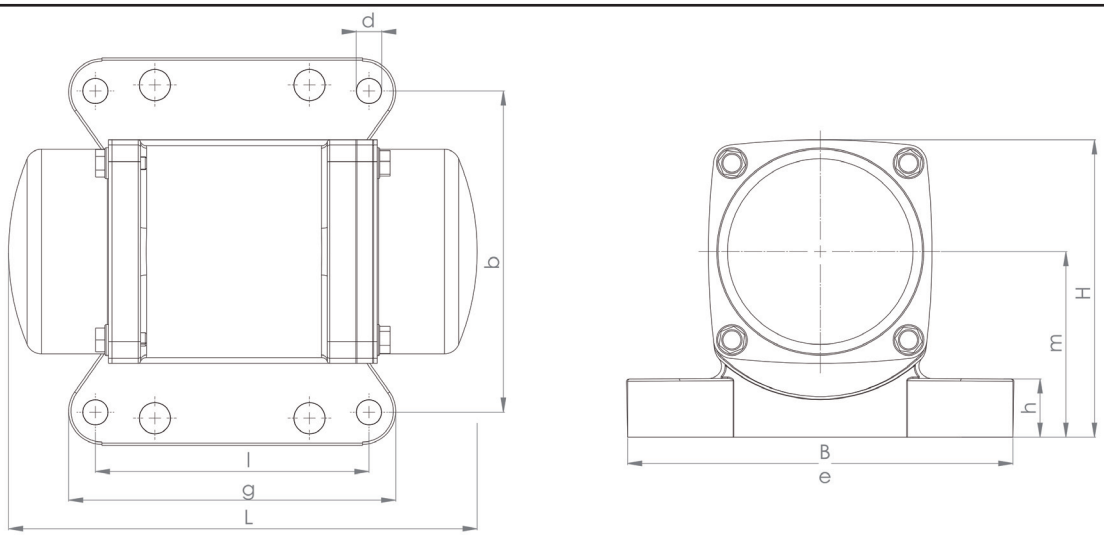

BRECON Vibrationstechnik GmbH - smart vibration technology
Stolberger Straße 393 · 50933 Cologne · Germany
Phone: +49 221 9544270 · Fax: +49 221 9544277
www.brecon.de · info@brecon.de