GERWAH® EKN

Backlash-free Metal Bellows Couplings

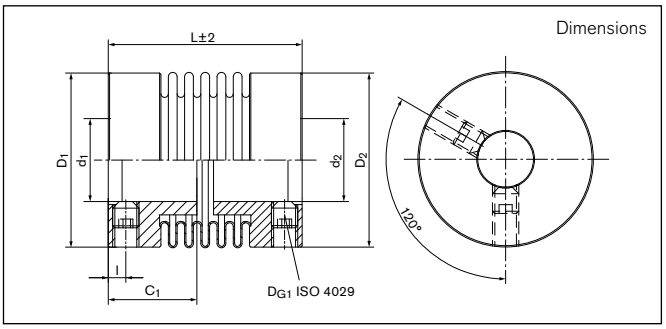

Dimensions

d_1, d_{2min} = Min. bore diameter
d_1, d_{2max} = Max. bore diameter
d_{1k}, d_{2kmin} = Min. bore diameter with keyway acc. to DIN 6885-1
d_{1k}, d_{2kmax} = Max. bore diameter with keyway acc. to DIN 6885-1
C_1 = Guided length in hub boring
D_1, D_2 = Outer diameter hub
l = Distance between center screw hole and hub end
L = Total length

Size	d_1; d_2 min-max Without keyway	d_{1k}; d_{2k} min-max With keyway	C_1	D_1; D_2	l	L
	mm					
4	3 - 9	6 - 8	6	16	2	20/23/26
9	3 - 9	6 - 8	6	16	2	21/25/28
15	3 - 12	6 - 10	10	20	3	25/30
20	3 - 16	6 - 14	11	25	2	26/32/36
45	6 - 22	6 - 16	16	33	4	39/48
100	6 - 28	6 - 25	20	40	4	44/54

Transmission of the couplings transmissible torque T can not longer be guaranteed for certain with borings < d_{min}. Types with borings < d_{min} , however, can be supplied.

Moment of inertia and weight (mass) are calculated with reference to the largest bore size.

To continue see next page

Backlash-free Metal Bellows Couplings

GERWAH® EKN

Technical Data

T = Transmissible torque at given T_A
n_{max} = Max. rotation speed
C_{Tdyn} = Dynamic torsional stiffness
C_r = Radial spring stiffness
C_a = Axial spring stiffness
ΔKa = Max. permissible axial misalignment
ΔKw = Max. permissible angularly misalignment
ΔKr = Max. permissible radial misalignment
J = Total moment of inertia
Gw = Weight
D_{G1} = Thread diameter
T_{A1} = Tightened torque of clamping screw (G1)

Size	T	n_{max}	C_{Tdyn}	C_r	C_a	ΔKa	ΔKw	ΔKr	J	Gw	D_{G1}	T_{A1}
	Nm	1/min	10^3 Nm/rad	N/mm		mm	Degree	mm	10^{-3} Kgm²	kg	mm	Nm
4	0,5	15000	0,25/0,19/0,15	128/54/26	18/13/11	0,2/0,3/0,4	1,2/2/2	0,1/0,15/0,2	0,0002	0,005/0,006/0,007	1 x M3	0,5
9	1,1	15000	0,5/0,38/0,3	187/82/42	36/27/22	0,2/0,3/0,4	1,2/2/2	0,1/0,15/0,2	0,0002/0,00023/0,00026	0,006/0,007/0,008	1 x M3	0,5
15	1,75	15000	0,75/0,7	139/81	23/12	0,25/0,4	1,2/2	0,1/0,15	0,00075/0,0008	0,012/0,014	2 x M4	1,5
20	2,4	15000	1,5/1,3/1,0	147/96/46	18/14/9	0,3/0,4/0,5	1,2/2/2	0,1/0,2/0,25	0,0014/0,0016/0,0017	0,016/0,018/0,020	2 x M3	1,5
45	5,5	15000	6,5/4	444/108	47/29	0,3/0,5	1,2/2	0,1/0,2	0,0068/0,0073	0,048/0,052	2 x M6	3
100	12	15000	8,1/6,7	361/193	46/34	0,4/0,5	1,2/2	0,15/0,25	0,02/0,022	0,048/0,058	2 x M6	3

Transmissible torque T [Nm]

Size	Ø3	Ø4	Ø5	Ø6	Ø7	Ø8	Ø9	Ø10	Ø11	Ø12	Ø13	Ø14	Ø15	Ø16	Ø17	Ø18	Ø20	Ø22	Ø24	Ø26	Ø28
4	0,5	0,5	0,5	0,5	0,5	0,5	0,5	---	---	---	---	---	---	---	---	---	---	---	---	---	---
9	0,9	0,7	1,1	1,1	1,1	1,1	1,1	---	---	---	---	---	---	---	---	---	---	---	---	---	---
15	1,75	1,75	1,75	1,75	1,75	1,75	1,75	1,75	1,75	1,75	---	---	---	---	---	---	---	---	---	---	---
20	2,4	2,4	2,4	2,4	2,4	2,4	2,4	2,4	2,4	2,4	2,4	2,4	2,4	2,4	---	---	---	---	---	---	---
45	---	---	---	5,5	5,5	5,5	5,5	5,5	5,5	5,5	5,5	5,5	5,5	5,5	5,5	5,5	5,5	5,5	---	---	---
100	---	---	---	7,3	8,5	9,7	11	12	12	12	12	12	12	12	12	12	12	12	12	12	12

Ordering example: EKN

Series/Size	Length	Bore diameter d_1	Bore diameter d_2	Further details
EKN 20	**26**	**6**	**10**	*****

* Keyway

Subject to technical changes.