Elenco componenti di prodotto

MRP-ECP-0

Brake Series "B" dimension 120 supply 400 volt 50Hz with 1 brake disk with spline shaft Ø28 Z6

- WITHOUT HAND RELEASE -

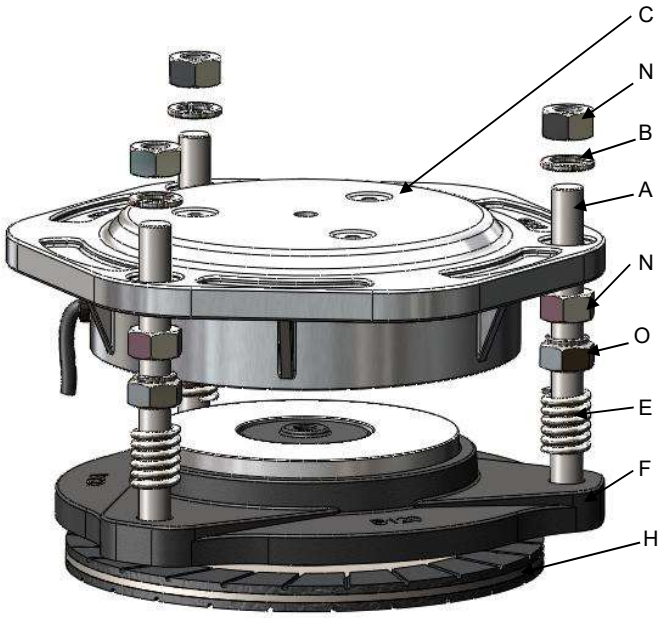

CODICE FRENO	ID. PARTE	CODICE PARTE	DESCRIZIONE	QTY	
GF-B120S1-405MC	A	TIR-B-M12H120	GUIDE BOLT-B- M12 HIGH 120mm	3	
	B	MAR-M12-SZ	ZINC PLATED SPRING WASHER M12	3	
	C	ELM-B120-405-MA	COIL B120 V.405 50Hz (Wire-white //black) 12MA DRILLED	1	
	D		NOT FITTED		
	E	MOL-B-E00	SPRINGS 19 X 30 BRAKE B120 3 PIECES	3	
	F	ANM-B120-S	MOBILE PALATE B120	1	
	G				
	H	DSC-B120-SZ06	DISK BRAKE DIM 120 IRON TYPE SZ6	1	
	I		NOT FITTED		
	L		NOT FITTED		
	N	MAD-M12-SZ	ZINCED STANDARD NUTS M12	6	
	O	MAD-M12-AZ	SELF LOCKING NUTS M12	3	

0