NOAH
Actuation

Electric Actuator
"NA" Series



NOAH ACTUATION CO., LTD
Unit 47, 425 Gilju-ro(70-1, Chunui-dong), Bucheon-si, Gyeonggi-do, Korea
TEL +82-2-806-4263 / FAX +82-2-806-4266
Domestic Sales: actuator@emico.co.kr

Distributed by



TABLE OF CONTENTS

04 Configuration
05 Features
06 Performance
06 Standard Specification
06 Optional Specification
07 Dimension
08 Optional
09 NA Integral Standard Specification
10 NA On, Off Type + Butterfly Valve
11 NA On, Off Type + Ball Valve

NOAH ACTUATION, founded on 1986, is the leading manufacturer of electric actuators in Korea and provides the best quality products with high technology and satisfactory services.

NOAH ACTUATION supplies electric actuators especially to buildings, plant, steelworks, power plants over 30 countries as well as domestic sales.
NOAH ACTUATION has launched spring return actuator for the first time in Korea and accelerated to expand market and to satisfy customers' need by specialized products.
We have made concerted efforts with expertise in electric actuators and continuous investment in R&D to be the world best in the market.
We promise we do everything we can to supply the reliable products and competent services.





Australia Finland Greece Korea Peru Singapore Turkey
Belgium France Israel Malaysia Russia Spain United Kingdom
China Germany Italy New Zealand Republic Of South Africa Sweden U.S.A

Configuration

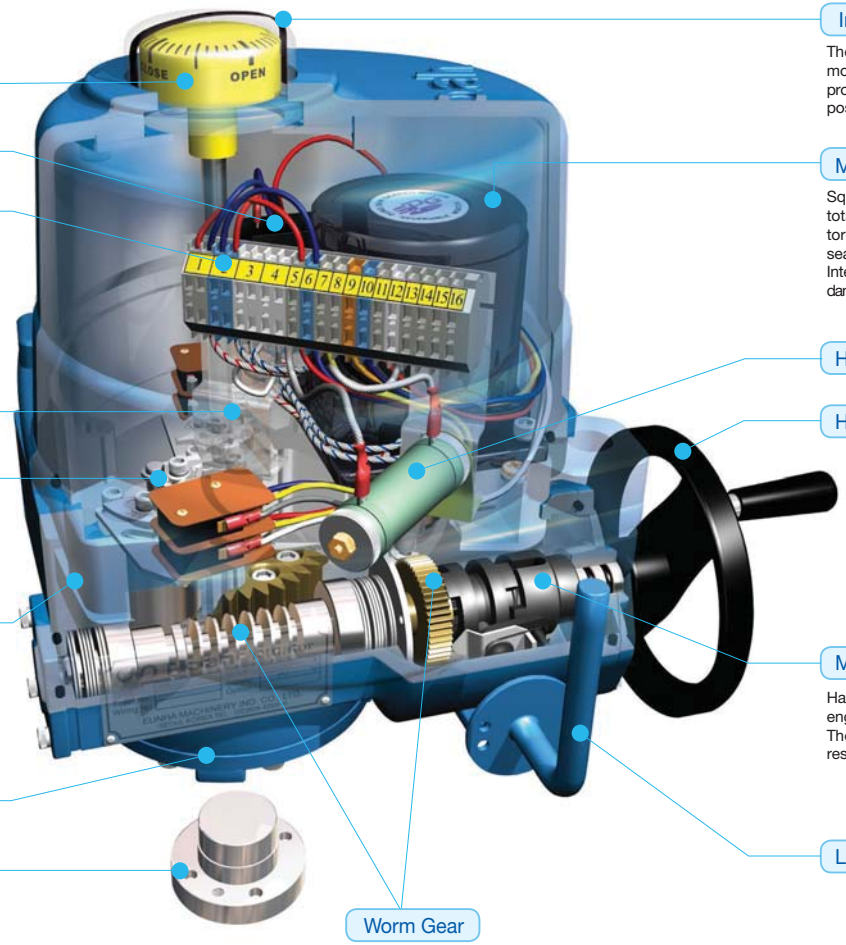

Quality terminal block containing segregated power and control terminal are designed for use in high vibration environments.

The dome type indicator is directly mounted on the center column to provided visual indication of the valve position, even over long distances.

Squirrel caged induction motor is a totally enclosed type with high stall torque and low inertia force to suit seating / unseating of valves.
Integral thermal protection to prevent damage to the single / three phase motor.

Hand / auto declutching lever for engagement of handwheel.
The power drive is automatically resorted by the motor starting.

The precision worm and worm wheel mechanism transfers high torque with high efficiency and low sound level (Max 50db), even though small in size. Additional benefits include low backlash and longer life. Various output torques (60N.m~3,000N.m) cater for valves from 2" to 24"



FEATURES

- SEALING

Standard enclosure with o-ring sealing is watertight to IEC IP67, NEMA 4 and 6. The actuator is available with optional explosion proof enclosure.

- WIRING

Electric wiring of control circuit is standardized for single and three phase power supply in a single module. Multiple terminal contacts sufficiently cover additional requirements such as auxiliary contacts for interlocking and other options.

- COMPONENT ARRANGEMENT

Mechanical and electrical module can be separated easily to improve assembling, maintenance and alteration of electrical requirements. Actuator has enough internal space for optional accessories.

- HAND WHEEL

Size of hand wheel is designed for safe and efficient emergency manual operation.

- MANUAL OVERRIDE

Hand / auto declutching lever for hand wheel engagement.
The power drive is automatically restored by motor start.

- ADAPTION

Base mounting is standard to ISO5211.
Drive bushing is removable for maching to valve stem requirement.
The actuator position on the valve can be selected for 4 positions by means of 4 bolt holes in the drive bushing.

- HEATER

A space heater inside the actuator prevents condensation due to temperature and weather changes. Standard 20W heater keeps all electrical components in the actuator clean and dry.

- LIMIT SWITCHES

The limit switch is activated by means of a simple and yet reliable cam mechanism mounted and driven by the center column. The valve position can be accurately and easily set with the simple adjustable switch mechanism. The set position is permanent and is not affected by over-travel resulting form manual operation.

- TORQUE SWITCHES

Cam activated torque switches are easily adjustable to provide over-load protection.

- SELF LOCKING

Rolled steel wormgear on aluminium bronze wormwheel self-locks to prevent valve back drive on control signal or power failure.

Performance

Type	Max Output Torque			Operating Time (90/sec)		Rated Current (A)							Motor		Duty Cycle (CSA)	Max Stem Dia	Handle Turns	Weight	
	Kg.m	N.m	in-lb	50Hz	60Hz	DC 24V	AC 110V	AC 220V	AC 230V	AC 240V	AC 380V	AC 440V	W	Class	S4 (%)	mm		kg	lb
NA006	6	60	531	17	14	2.5	0.7	0.38	0.38	0.38	0.15	0.15	15	F	50	22	8.5	9	19.9
NA009	9	90	782	17	14	3.5	1.1	0.51	0.56	0.48	0.18	0.18	25	F	50	22	8.5	9	19.9
NA015	15	150	1302	20	17	4.5	1.6	0.75	0.75	0.75	0.3	0.3	40	F	50	22	10	11.5	25.4
NA019	19	190	1650	20	17	4.5	1.6	0.75	0.75	0.78	0.3	0.3	40	F	50	22	10	11.5	25.4
NA028	28	280	2431	24	20	6.5	1.6	0.75	0.75	0.8	0.32	0.32	40	F	50	32	12.5	14	30.9
NA038	38	380	3299	24	20	–	2.3	1.1	1.06	0.9	0.34	0.34	60	F	30	32	12.5	14	30.9
NA050	50	500	4340	24	20	–	3.5	1.2	1.2	1.1	0.47	0.47	90	F	25	32	12.5	14	30.9
NA060	60	600	5208	29	24	–	3.5	1.2	1.2	1.1	0.47	0.47	90	F	25	42	14.5	24	53
NA080	80	800	6944	29	24	–	3.8	1.8	1.8	1.8	0.75	0.75	180	F	25	42	14.5	24	53
NA100	100	1000	8680	29	24	–	4.0	2.0	2.0	2.0	0.85	0.85	180	F	25	42	14.5	24	53
NA150	150	1500	13020	87	72	–	3.5	1.2	1.2	1.1	0.47	0.47	90	F	25	75	43.5	60	132.3
NA200	200	2000	17360	87	72	–	3.8	1.8	1.8	1.8	0.75	0.75	180	F	25	75	43.5	60	132.3
NA250	250	2500	21700	87	72	–	4.0	2.0	2.0	2.0	0.85	0.85	180	F	25	75	43.5	60	132.3
NA300	300	3000	26039	116	96	–	4.0	2.0	2.0	–	0.85	0.85	180	F	25	75	43.5	60	132.3

Standard Specification

Enclosure	Watertight Ingress Protection 67 Nema 4 and 6
Ambient Temperation	-20℃ to +70℃ , 150℃ / 1hr (Option: -60℃, 400℃ / 1hr)
Power Supply	110 / 220 VAC 50/60Hz , 380 / 440 VAC 50/60Hz Option : AC 24V , DC 24V
Torque Switches	2 Open / Close (Except NA006, NA009)
Limit Switches	2 Open / Close, 250VAC 15A Rating
Stall Protection	Built - in Thermal Protection (Open 150℃ ± 5℃ / Close 97℃ ± 15℃)
Travel Angle	90±5℃
Indicator	Continuous Position Indicator
Manual Override	Hand / Auto Declutching Mechanism
Self Locking	Provided by means of Worm Gearing
Mechanical Stops	External Adjustable Screws
Space Heater	20W
Conduit Entries	2-PF 3/4" , 2-NPT 3/4" , 2-M20 x 1.5 (Pitch)
Lubrication	Shell Gadus S2 V220 2
Material	Aluminium
Surface Treatment	Anodizing
External Coating	Polyester(TGIC-Free)

Optional Specification

EXP	Explosion Proof / Ex d IIB T4
IP68	Watertight Enclosure IP68 / 1bar 72h (KTL)
ALS	Auxiliary Open, Close Limit Switches
ATS	Auxiliary Open, Close Torque Switches
PIU	Potentiometer 1K Ohm
PCU	Proportional Control Unit / Input : DC 4-20mA, DC 1~5V, DC 2~10V / Output: DC 4-20mA
CPT	Current Position Transmitter
LCU	Local Control Unit
IMS	Integral Motor Starter (On-Off Action)
EXT	Travel Angle (120 ° , 135 ° , 180 ° , 270 ° , 300 °)
DCM	Power Supply DC 24V (NA006~NA028)
Field-Bus	Profi-Bus, Mod-Bus, Can-Bus

Dimension

MODEL : NA006~NA100

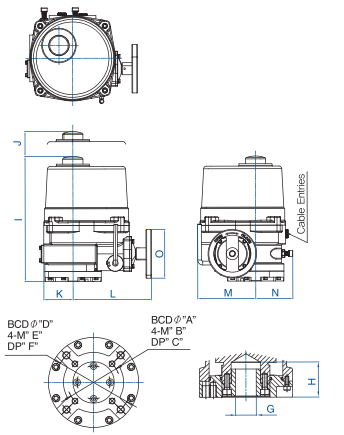

MODEL : NA150~NA300

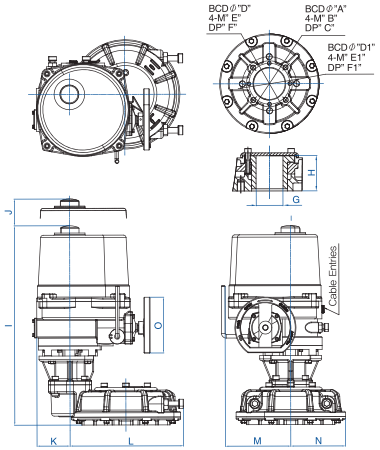

Type		NA006 NA009	NA015 NA019	NA028 NA038 NA050	NA060 NA080 NA100	NA150, NA200, NA250, NA300	
A		BCD70	BCD70	BCD102	BCD125	BCD125	
B		4-M8	4-M8	4-M10	4-M12	4-M12	
C		12	12	18	22	22	
Flange ISO5211		F07	F07	F10	F12	F12	
D	D1	–	BCD102	BCD125	BCD140	BCD140	BCD165
E	E1	–	4-M10	4-M12	4-M16	4-M16	4-M20
F	F1	–	15	18	22	22	25
Flange ISO5211		–	F10	F12	F14	F14	F16
Option		BCD82	BCD82	–	BCD102(F10)	–	
G(MAX)	Key	22	22	32	42	75	
	Square	20	20	26	34	65	
H		46	46	55	62	100	
I		270	274	321	362	554	
J		108	108	130	178	178	
K		55	70	75	92	92	
L		174	184	202	223	315	
M		120	139	149	192	192	
N		68	85	95	105	152	
O		102	102	125	155	170	
Cable Entries		2-PF3/4"	2-PF3/4"	2-PF3/4"	2-PF3/4"	2-PF3/4"	
		2-M20x1.5	2-M20x1.5	2-M20x1.5	2-M20x1.5	2-M20x1.5	
		2-NPT3/4"	2-NPT3/4"	2-NPT3/4"	2-NPT3/4"	2-NPT3/4"	

Optional

ALS (Auxiliary Limit Switches)

Provide dry contact signal to check valve's positions (cam switches structure).

ATS (Auxiliary Torque Switches)

Provide dry contact signal send to customer's panel as fault signal (cam switches structure).

CPT (Current Position Transmitter)

Combined with P.I.U and transfer output signal (DC 4-20mA) from P.I.U's value of resistance.

- Output Signal : DC 4-20mA



PCU (Proportional Control Unit)

Combined with P.I.U and control the valve's position proportionally by input signal and provide valve's position as their output signal.

- Input signal : DC 4-20mA / DC 1-5V / DC 2-10V
- Output signal : DC 4-20mA



PIU (Position Indication Unit)

Provide resistance value (0~1KΩ) according to valve's position.



LCU (Local Control Unit)

LCU can be installed either on the actuator or distantly by cable. It can be controlled conveniently as it consists of Local / Remote Switch, Open / Stop / Close Switch and LED Lamp



Field-Bus

Field-Bus can control 126pcs of electric actuators at the same time using communication hardware system based on PC.

(Profi-Bus, Mod-Bus, Can-Bus) For more information please contact EMICO.





NA Integral Standard Specification

Main Power	110/220 VAC 50/60Hz , 380/440 VAC 50/60Hz	
Internal Control Power	24 VDC	
External Control Power	110 VAC, 24 VDC	
Torque Switches	2 Open / Close (Except NA006, NA009)	
Limit Switches	2 Open / Close, 250VAC 15A Rating	
Control Unit	1. Non Instrusive Push Butttons [Open/ Stop/ Close] 2. Non Instrusive Selector Switch [Remote / Off / Local] 3. Reversing Contactor 4. Phase Discriminator	
Position Indicator	Digital Display (0~100%)	
Remote Dry Contact (Max 250VAC 5A)	1. Full Open / Close 2. Opening / Closing 3. Open / Close Over Torque 4. Monitor (Remote / Local)	
Conduit Entries	Standard	1-PF 1" , 2-PF 3/4"
	Option	1-NPT 1" , 2-NPT 3/4" 1-M25 Pitch 1.5 , 2-M20 Pitch 1.5
Potentiometer	0 ~ 1 KΩ	
Lubrication	Shell Gadus S2 V220 2	
Consist of Materials	Aluminium	
Surface Treatment	Anodizing	
External Coating	Polyester(TGIC-Free)	

NA Integral Optional Specification

PCU	PCU enables the actuator to be controlled form a distance. Input: DC 4–20mA, DC 1~5V, DC 2~10V / Output: DC 4–20mA
CPT	CPT outputs signal by converting the actuator's place value to ampere. Output Signal: DC 4–20mA
FDB	FDB is used when controlling actuators using communication hardware system based on PC. (Profi–Bus, Mod–Bus, Can–Bus) For more information please contact EMICO.



NA On, Off Type + Butterfly Valve

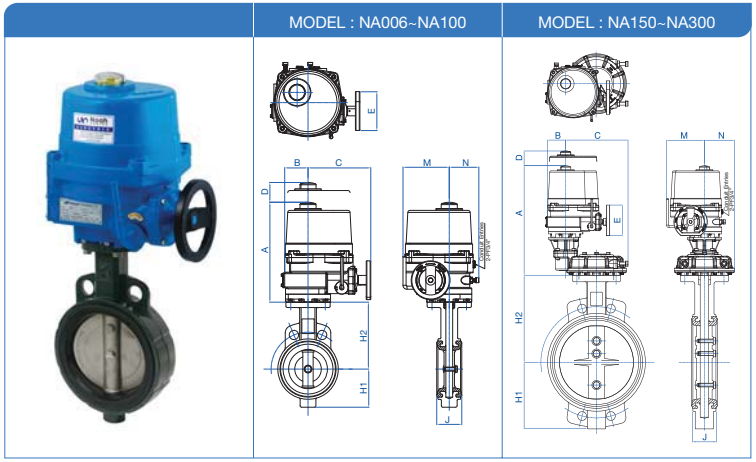

Dimension(mm)											
Size	Model	A	B	C	D	E	M	N	H1	H2	J
80A	NA006	270	55	174	108	102	120	68	78	136	46
100A	NA009	270	55	174	108	102	120	68	89	157	46
125A	NA015	274	70	184	108	102	139	85	109	175	52
150A	NA019	274	70	184	108	102	139	85	124	195	56
200A	NA028	321	75	202	130	125	149	95	174	226	60
250A	NA038	321	75	202	130	125	149	95	205	268	68
300A	NA060	362	92	223	178	155	192	105	228	301	78
350A	NA080	362	92	223	178	155	192	105	254	327	78

Gear Box Type											
400/450A	NA150	554	92	315	178	170	192	152	290/318	348/400	102/108
500A	NA200	554	92	315	178	170	192	152	348	435	125
600A	NA250	554	92	315	178	170	192	152	461	508	150
600/650A	NA300	554	92	315	178	170	192	152	461/487	508/542	150/160

※ Note : Maker's standard 220V.
For AC 110V, 380V, 440V, OPTION DC 24V contact with the manufacturer.

※ Rating : JIS 10K Wafer Type

NA On, Off Type + Ball Valve

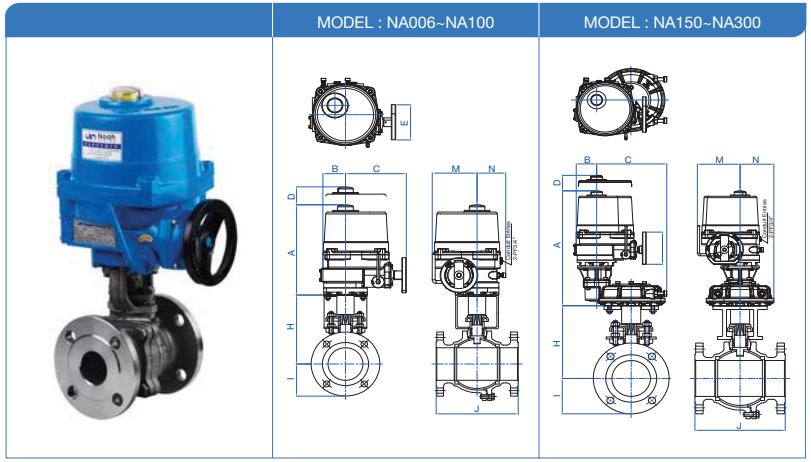

Dimension(mm)											
Size	Model	A	B	C	D	E	M	N	H	I	J
40A	NA006	270	55	174	108	102	120	68	196	70	165
50A	NA009	270	55	174	108	102	120	68	204	72.5	178
65A	NA015	274	70	184	108	102	139	85	216	87.5	190
80A	NA019	274	70	184	108	102	139	85	236	92.5	203
100A	NA028	321	75	202	130	125	149	95	254	105	229
125A	NA050	321	75	202	130	125	149	95	310	125	356
150A	NA060	362	92	223	178	155	192	105	335	140	394
200A	NA100	362	92	223	178	155	192	105	406	165	457

Gear Box Type											
250A	NA200	554	92	315	178	170	192	152	442	200	533
300A	NA250	554	92	315	178	170	192	152	506	222.5	610
300A(350A)	NA300	554	92	315	178	170	192	152	506	222.5	610

※ Note : Maker's standard 220V. For AC 110V, 380V, 440V, OPTION DC 24V contact with the manufacturer.

※ Rating : JIS 10K RF