Insert Deal srl

COMPRESSED AIR AND TECHNICAL GAS EQUIPMENT



Filter
Regulator
Filter Regulator
Lubricator
in AISI 316 material

Available with PED certificates and ATEX certificate

Håland Instrumentering AS
Tangen 12, Dusavik, N-4070 RANDABERG
Telefon: 517 19 700, Telefax: 517 19 701
Email : post@hi-as.no, Web: www.hi-as.no

Håland Instrumentering AS

AISI 316L COMPRESSED AIR UNITS
FILTER - REGULATOR - LUBRIGATOR

Stainless steel filter/regulator intended for use in potentially explosive atmospheres caused by gases, vapours, mists and/ or dust according to ATEX directive 98/9/EC

Diaphragm medium pressure air handling units, including filter, regulator and lubrigators.

The range cover 1/8” to 2” coverering a flow range of air from 15 to 6000 Nm3/hr to suit the requirement for the applications.

Maximum inlet pressure 30 bar, with an adjustable outlet pressures from 0,2 to 15 bar.

External and internal parts in stainless steel AISI316L.

The bowl on the filter and filter regulators are supplied with manual drain as standard for draining the condensation. Auto-drain can be supplied as an option.

The filters cartridge is 50 micron as standard with an optioal 5 micron available. The drain for the over pressure is inclused (relieving). Gauge ports is available as standard on both side of the units.

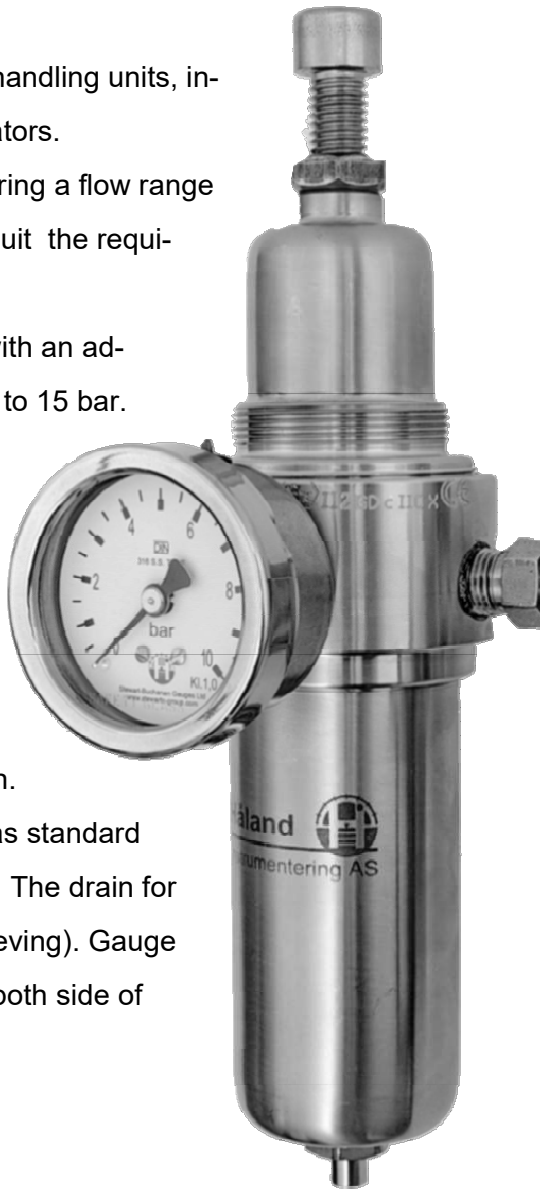

FEATURES AND STANDARDS

Safety code: II 2G/D c IIC X T85°C (T6) (ZONE 1-21)

Explosion group IIC

Compliance with essential health and safety requirements has been assured with European Standards

EN 13463-1 and **EN-13463-5**



Filter/Regulator with reinforced diaphragm with PTFE lining and all metal parts in 316L stainless steel for standard inlet pressure of max 30 bar

Built-in overpressure relieving function, optional non-relieving

Filtering effect by centrifugation of the air and a standard 50 microns filtertering element.
5 microns element available as option.

Large operating temperature, most of the units can be delivered from -40°C to +100°C

Body, bonnet and internal parts in 316L stainless steel according to ASTM A 182/NACE MR 01.75

Insert Deal srl has been producing air and gas handling units for more than 30 years. It's installed in chemical, petro-chemical, fire extinguishing, industrial application all over the world.

In addition to the stainless steel product shown in this leaflet Insert Deal srl have a complete range of regulators for use in air and gas application in aluminum, brass, bronze, monel and other materials. Please contact Håland Instrumentering AS for additional literature.

Håland Instrumentering AS

PRESSURE FILTER REGULATOR TYPE FR318MC - FR314MC

Diaphragm medium pressure filter regulator.

Flow from 15 to 32 Nm^3/hr to suit the small flow applications.

Inlet pressure up to 30 bar, with an adjustable outlet pressures from 0,2 to 15 bar depending of the range spring.

External and internal parts in stainless steel AISI316L.

The 30cc bowl are supplied with a manual drain device as standard for draining the condensation.

Built-in overpressure relieving function, optional non-relieving.

1/8" BSP gauge ports is available as standard on both side of the units.

Filtering effect by centrifugation of the air and a standard 50 microns filtertering element. 5 microns element available as option.

Large temperature range, -40°C to +60°C with an option for extended temperature range of –20°C to +100°C



MATERIAL OF CONSTRUCTION

Body:	Stainless Steel AISI316L
Bonnet:	Stainless Steel AISI316L
Bowl:	Stainless Steel AISI316L
Inner parts:	Stainless Steel AISI316L
Diaphragm:	NBR enforced with cotton fiber + PTFE

ACCESSORIES

Ring –nut order number: P35021030304
Kit bracket and ring-nut: M14301

MODEL CODING AND TECHNICAL INFORMATION

BASIC MODEL NUMBER (BLUE BACKGROUND IS STANDARD)

443#	Serie FR318 / FR314 filter regulator in AISI 316L for air and gasses

CONNECTION SIZE & TYPE

M0	1/8" BSP
N0	1/4" BSP
V0	1/4" NPT

DRAIN

-	SAI - Automatic drain (max 16 bar)
14	SM - Manual drain
21	Cap

PRESSURE RANGE

A0	0,2 - 2,0 Bar	[Max flow 15 Nm^3/h]
B0	0,3 - 3,0 Bar	[Max flow 18 Nm^3/h]
D0	0,8 - 8,0 Bar	[Max flow 21 Nm^3/h]
E0	1,5 - 15 Bar	[Max flow 28 Nm^3/h]
F0	3,0 - 30 Bar	[Max flow 32 Nm^3/h]

FILTER CARTRIDGE

C	5 micron
H	50 micron

BRANDING

I	ID
Z	ATEX

OPTIONS

000	None
G	PR. GAUGE
B	SS BRACKET
V	VENT BREADER

443# V0 14 E0 H I 0 0 0

DIMENSIONS

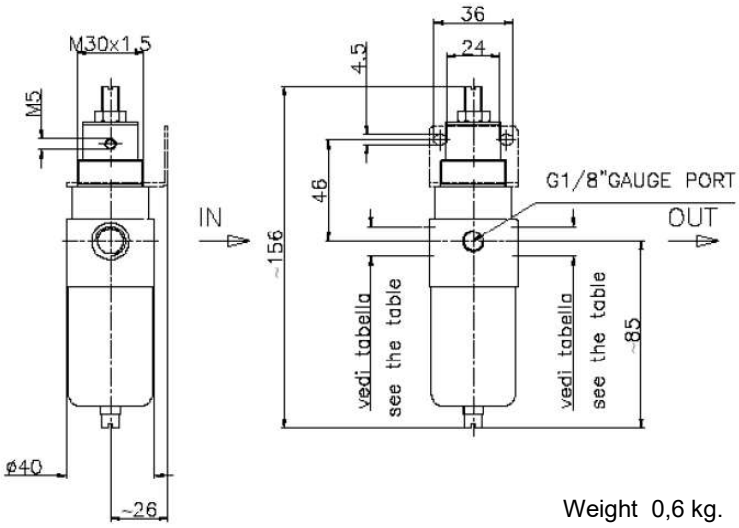

Weight 0,6 kg.

Flow curves based on 10 bars air inlet pressure with 50µ filter

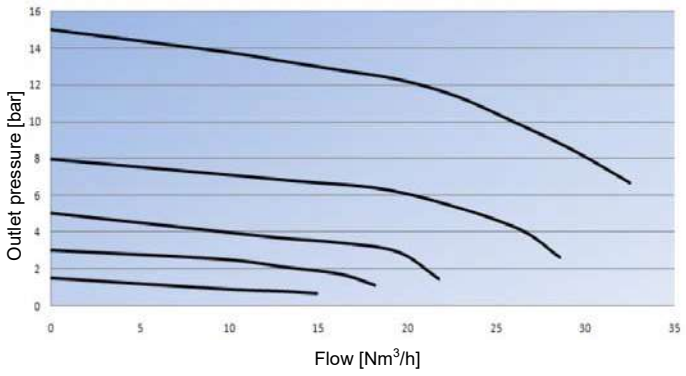

PRESSURE FILTER REGULATOR FR314ST / FR338ST

Diaphragm medium pressure filter regulator.

Flow from 75 to 200 Nm^3/hr.

Maximum inlet pressure 30 bar, with an adjustable outlet pressures from 0,2 to 15 bar depending of the range spring.

External and internal parts in stainless steel AISI316L.

The 0,14 liter bowl are supplied with a manual drain device as standard for draining the condensation. Autodrain can be supplied as an option.

Built-in overpressure relieving function, optional non-relieving.

1/4" BSP/NPT gauge ports is available as standard on both side of the units.

Filtering effect by centrifugation of the air and a standard 50 microns filtertering element. 5 microns element available as option.

Large temperature range, -40°C to +80°C with an option for extended temperature range of –20°C to +100°C



MATERIAL OF CONSTRUCTION

Body:	Stainless Steel AISI316L
Bonnet:	Stainless Steel AISI316L
Bowl:	Stainless Steel AISI316L
Inner parts:	Stainless Steel AISI316L
Diaphragm:	NBR enforced with cotton fiber + PTFE

ACCESSORIES

Ring –nut order number: P35017030304
Kit bracket and ring-nut: M14302

MODEL CODING AND TECHNICAL INFORMATION

BASIC MODEL NUMBER (BLUE BACKGROUND IS STANDARD)

4S3#	Serie FR314 / FR338 filter regulator in AISI 316L for air and gasses

CONNECTION SIZE & TYPE

N0	1/4" BSP
V0	1/4" NPT
L0	3/8" BSP
W	3/8" NPT

DRAIN

31	Automatic drain (max 16 bar)
32	Manual Drain (max 30 bar)
	Cap

PRESSURE RANGE

A0	0,2 - 2,0 Bar	[Max flow 75 Nm^3/h]
B0	0,3 - 3,0 Bar	[Max flow 110 Nm^3/h]
D0	0,8 - 8,0 Bar	[Max flow 140 Nm^3/h]
E0	1,5 - 15 Bar	[Max flow 200Nm^3/h]

FILTER CARTRIDGE

C	5 micron	[Cv=056 Nm^3/h]
H	50 micron	[Cv=067 Nm^3/h]

BRANDING

I	ID
Z	ATEX

OPTIONS

000	None
G	PR. GAUGE
B	SS BRACKET
V	VENT BREADER

4S3# V0 32 E0 H I 0 0 0

DIMENSIONS

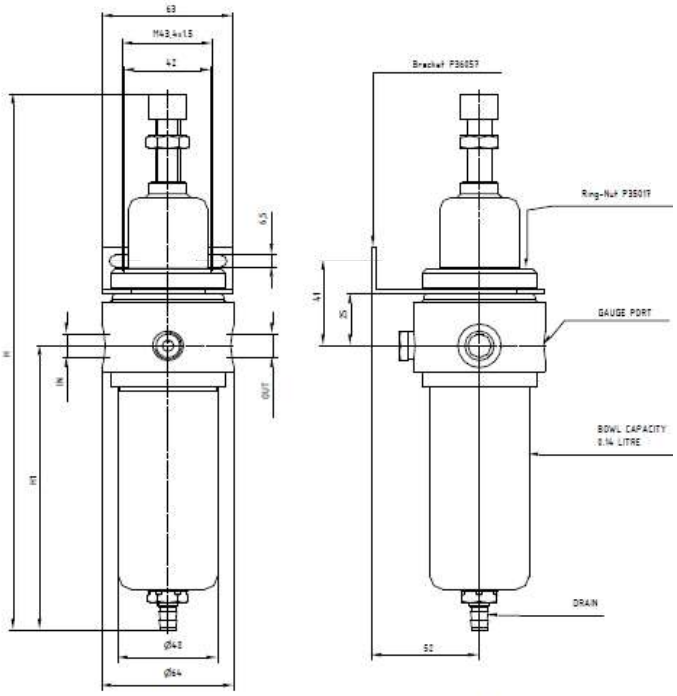

PS (bar)	DRAIN	H	H1
	16 AUTOMATIC	159	137
	30 MANUAL	254	182
	50 CAP	246	124

GAS FILTRATION	
CARTRIDGE	MATERIAL
5 µm	AISI 316L
50 µm	AISI 316L

Weight 1,5 kg.

Flow curves based on 10 bars air inlet pressure with 50µ filter

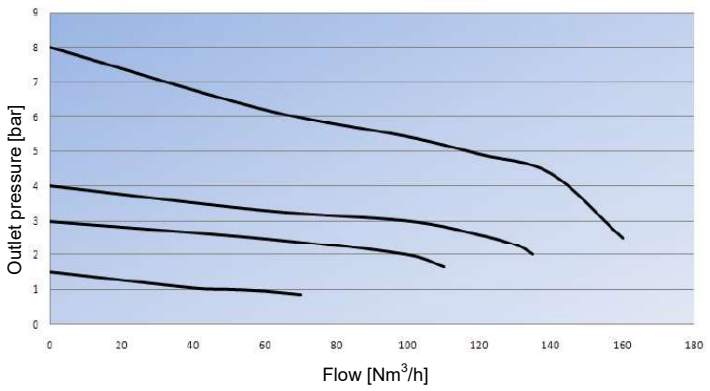

PRESSURE FILTER REGULATOR TYPE FR312ST / FR334ST

Diaphragm medium pressure filter regulator.

Flow from 100 to 250 Nm^3/hr.

Maximum inlet pressure 30 bar, with an adjustable outlet pressures from 0,2 to 15 bar depending of the range spring.

External and internal parts in stainless steel AISI316L.

The 0,18 liter bowl are supplied with a manual drain device as standard for draining the condensation. Autodrain can be supplied as an option.

Built-in overpressure relieving function, optional non-relieving.

1/4" BSP/NPT gauge ports is available as standard on both side of the units.

Filtering effect by centrifugation of the air and a standard 50 microns filtertering element. 5 microns element available as option.

Large temperature range, -40°C to +80°C with an option for extended temperature range of –20°C to +100°C



MATERIAL OF CONSTRUCTION

Body:	Stainless Steel AISI316L
Bonnet:	Stainless Steel AISI316L
Bowl:	Stainless Steel AISI316L
Inner parts:	Stainless Steel AISI316L
Diaphragm:	NBR enforced with cotton fiber + PTFE

ACCESSORIES

Ring –nut order number: P35018030304
Kit bracket and ring-nut: M14304

MODEL CODING AND TECHNICAL INFORMATION

BASIC MODEL NUMBER (BLUE BACKGROUND IS STANDARD)

4S3#	Serie FR312 / FR334 filter regulator in AISI 316L for air and gasses

CONNECTION SIZE & TYPE

P0	1/2" BSP
H0	1/2" NPT
Q0	3/4" BSP
X0	3/4" NPT

DRAIN

31	Automatic drain (max 16 bar)
32	Manual drain (max 30 bar)
33	Cap

PRESSURE RANGE

A0	0,2 - 2,0 Bar	[Max flow 100 Nm^3/h]
B0	0,3 - 3,0 Bar	[Max flow 150 Nm^3/h]
D0	0,8 - 8,0 Bar	[Max flow 200 Nm^3/h]
E0	1,5 - 15 Bar	[Max flow 250 Nm^3/h]

FILTER CARTRIDGE

C	5 micron	[Cv=1,06 Nm^3/h]
H	50 micron	[Cv=1,25 Nm^3/h]

BRANDING

I	ID
Z	ATEX

OPTIONS

000	None
G	PR. GAUGE
B	SS BRACKET
V	VENT BREADER

4S3# H0 E0 H 14 I 0 0 0

DIMENSIONS

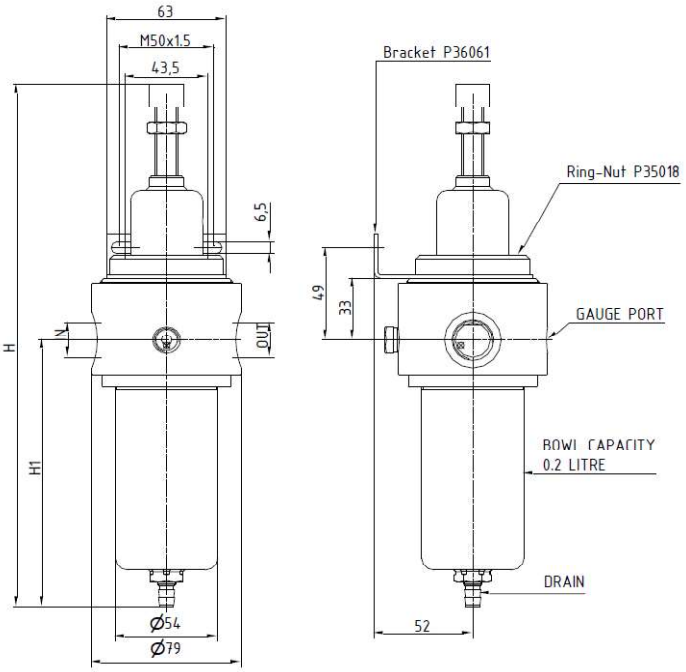

PS [bar]	DRAIN	H	H1
16	AUTOMATIC	~268	141
30	MANUAL	~263	136
50	CAP	~255	128

GAS FILTRATION	
CARTRIDGE	MATERIAL
5 µm	AISI 316L
50 µm	AISI 316L

Weight 2,1 kg.

Flow curves based on 10 bars air inlet pressure with 50µ filter

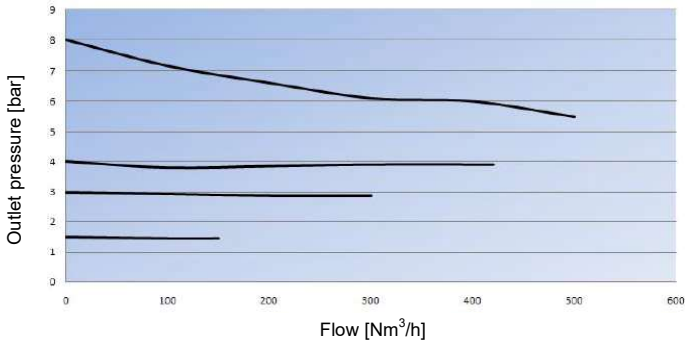

PRESSURE FILTER REGULATOR TYPE 310FR

Diaphragm medium pressure filter regulator.

Flow from 200 to 600 Nm^3/hr.

Maximum inlet pressure 30 bar, with an adjustable outlet pressures from 0,2 to 15 bar depending of the range spring.

External and internal parts in stainless steel AISI316L.

The 0,5 liter bowl are supplied with a manual drain device as standard for draining the condensation. Autodrain can be supplied as an option.

Built-in overpressure relieving function, optional non-relieving.

1/4" BSP/NPT gauge ports is available as standard on both side of the units.

Filtering effect by centrifugation of the air and a standard 50 microns filtertering element. 5 microns element available as option.

Large temperature range, -40°C to +80°C with an option for extended temperature range of –20°C to +100°C



MATERIAL OF CONSTRUCTION

Body:	Stainless Steel AISI316L
Bonnet:	Stainless Steel AISI316L
Bowl:	Stainless Steel AISI316L
Inner parts:	Stainless Steel AISI316L
Diaphragm:	NBR enforced with cotton fiber + PTFE

ACCESSORIES

Ring –nut order number: P35017030304
Kit bracket and ring-nut: M1H301

MODEL CODING AND TECHNICAL INFORMATION

BASIC MODEL NUMBER (BLUE BACKGROUND IS STANDARD)

310FR#	Serie 10 filter regulator made of Stainless Steel AISI 316L for air and gases

CONNECTION SIZE & TYPE

Q0	3/4" BSP
R0	1" BSP
X0	3/4" NPT
Y0	1" NPT

PRESSURE RANGE

A0	0,2 - 2,0 Bar	[Max flow 200 Nm^3/h]
B0	0,3 - 3,0 Bar	[Max flow 230 Nm^3/h]
D0	0,8 - 8,0 Bar	[Max flow 270 Nm^3/h]
E0	1,5 - 15 Bar	[Max flow 350 Nm^3/h]
F0	3,0 - 30 Bar	[Max flow 500 Nm^3/h]
G0	5,0 - 50 Bar	[Max flow 700 Nm^3/h]

FILTER CARTRIDGE

C	5 micron	
H	50 micron	[Cv=3,0 Nm^3/h]

DRAIN

18	Automatic drain
20	Manual drain
21	Cap

BRANDING

I	ID
AT	ATEX

OPTIONS

000	None
G	PR. GAUGE
B	SS BRACKET
V	VENT BREADER

310FR# Q0 E0 H 20 I 0 0 0

DIMENSIONS

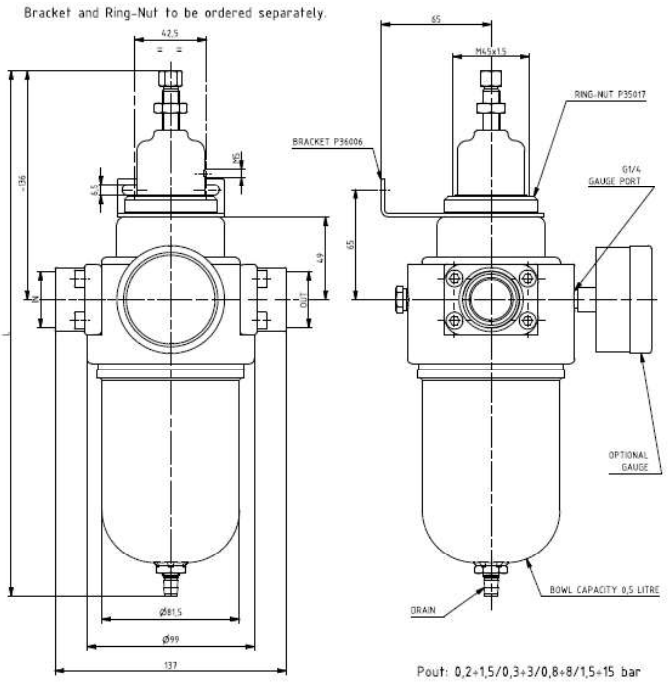

Weight 5,0 kg

Flow curves based on 10 bars air inlet pressure with 50µ filter

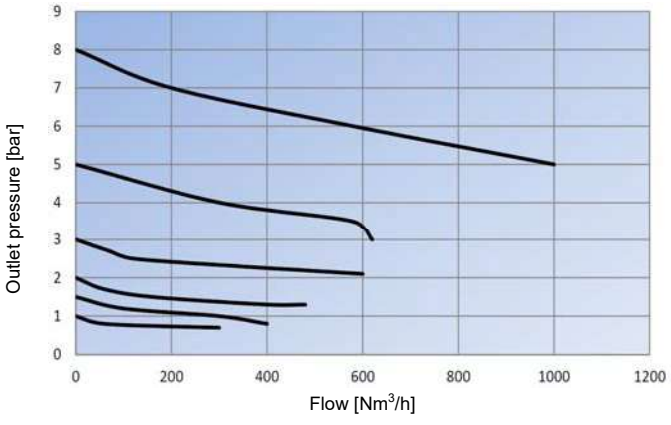

PRESSURE FILTER REGULATOR TYPE FR312ST & FR334ST

Diaphragm medium pressure filter regulator.

Flow from 2500 to 4500 Nm^3/hr.

Maximum inlet pressure 30 bar, with an adjustable outlet pressures from 0,1 to 15 bar depending of the range spring.

External and internal parts in stainless steel AISI316L.

The 0,8 liter bowl are supplied with a manual drain device as standard for draining the condensation. Autodrain can be supplied as an option.

Built-in overpressure relieving function, optional non-relieving.

1/4" BSP/NPT gauge ports is available as standard on both side of the units.

Filtering effect by centrifugation of the air and a standard 50 microns filtertering element. 5 microns element available as option.

Large temperature range, -40°C to +80°C with an option for extended temperature range of –20°C to +100°C

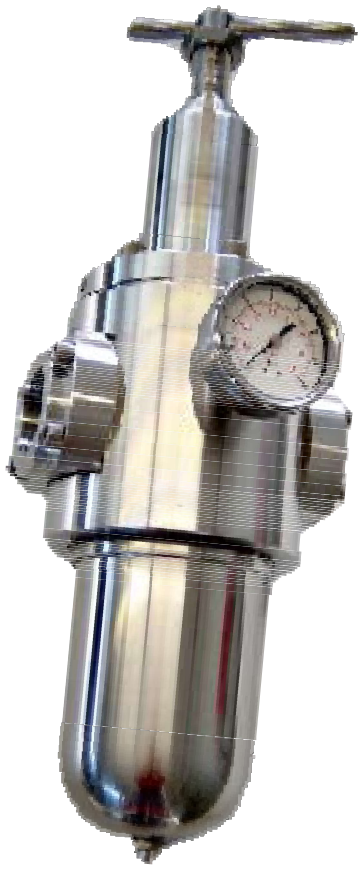

MATERIAL OF CONSTRUCTION

Body:	Stainless Steel AISI316L
Bonnet:	Stainless Steel AISI316L
Bowl:	Stainless Steel AISI316L
Inner parts:	Stainless Steel AISI316L
Diaphragm:	NBR enforced with cotton fiber + PTFE

MODEL CODING AND TECHNICAL INFORMATION

FR315 & FR320 BASIC MODEL NUMBER

473#	Serie FR315/FR320 filter regulator in AISI 316L for air and gases

CONNECTION SIZE & TYPE

S0	1 1/2" BSP
Z0	1 1/2" NPT
T0	2" BSP
G0	2" NPT

PRESSURE RANGE

A0	0,2 - 2,0 Bar	[Max flow 2000 Nm^3/h]
B0	0,3 - 3,0 Bar	[Max flow 2500 Nm^3/h]
D0	0,8 - 8,0 Bar	[Max flow 3700 Nm^3/h]
E0	1,5 - 15 Bar	[Max flow 4500 Nm^3/h]
F0	3,0 - 30 Bar (Regulator)	
G0	5,0 - 50 Bar (Regulator)	

FILTER CARTRIDGE

C	5 micron
H	50 micron

DRAIN

18	Automatic drain
20	Manual drain
21	Cap

BRANDING

I	ID
AT	ATEX

OPTIONS

000	None
G	PR. GAUGE
B	SS BRACKET
V	VENT BREADER

473# T0 E0 H 20 I 0 0 0

DIMENSIONS

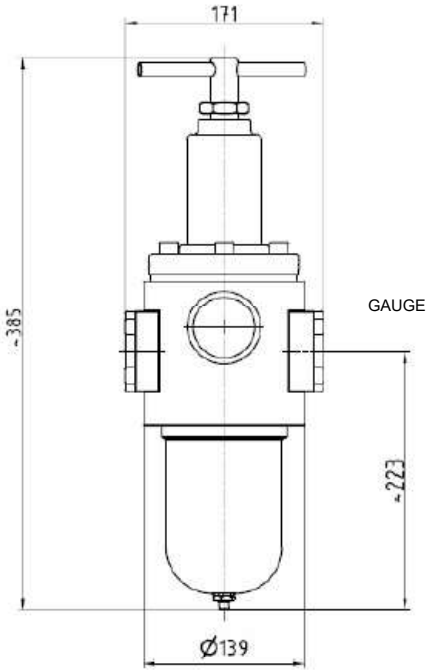

GAUGE PORT: 1/4" NPT/BSP

Weight 8,0 kg

Flow curves based on 10 bars air inlet pressure with 50µ filter

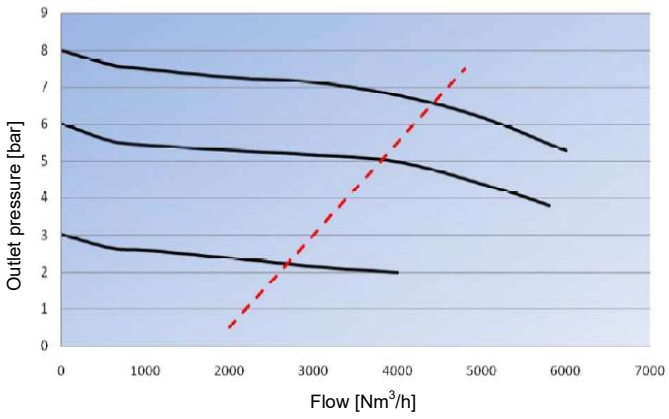

LUBRICATORS TYPE L3XXST & L3XXM

For lubrication of air distribution Insert Deal have a range of lubricators to cover the flow lines from 1/4” to 1” threads. The threads can be in either NPT or BSP to suit the requirement.

Maximum inlet pressure 30 bar.

External and internal parts in stainless steel AISI316L.

The oilresorvoir/bowl are supplied as 0,15 liter for the small body (1/4” and 3/8”), 0,18 liter for the medium body (1/2” and 3/4”) and 0,6 liter for the large body (3/4” and 1”)

The lubricators have a fine adjustment for adjusting the right flow of oil for the given application.

Large temperature range, -40°C to +80°C with an option for extended temperature range of –20°C to +100°C



MATERIAL OF CONSTRUCTION

Body:	Stainless Steel AISI316L
Bonnet:	Stainless Steel AISI316L
Bowl:	Stainless Steel AISI316L
Inner parts:	Stainless Steel AISI316L

MODEL CODING AND TECHNICAL INFORMATION

BASIC MODEL NUMBER

L3	Lubricator in AISI 316L for air and gases

BODY / CONNECTION SIZE

14	1/4”
38	3/8”
12	1/2”
34	3/4”
10	1”

STYLE

ST	Small and Medium body
M	Large body

CONNECTION TYPE

N	1/4” BSP
V	1/4” NPT
L	3/8” BSP
W	3/8” NPT
P	1/2” BSP
H	1/2” NPT
Q	3/4” BSP
X	3/4” NPT
R	1” BSP
Y	1” NPT

BRANDING

I	ID
AT	ATEX

OPTIONS

000	None

L3 14 ST / V I 0 0 0

DIMENSIONS

SMALL BODY

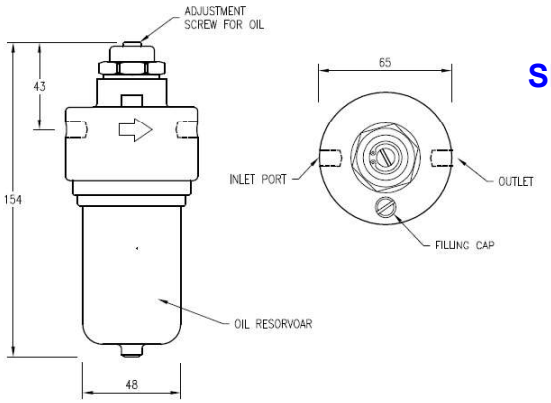

MEDIUM BODY

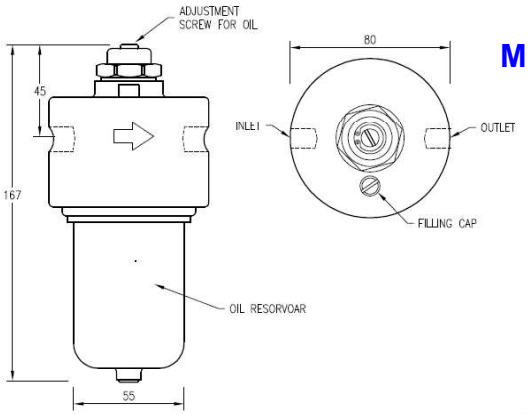

LARGE BODY

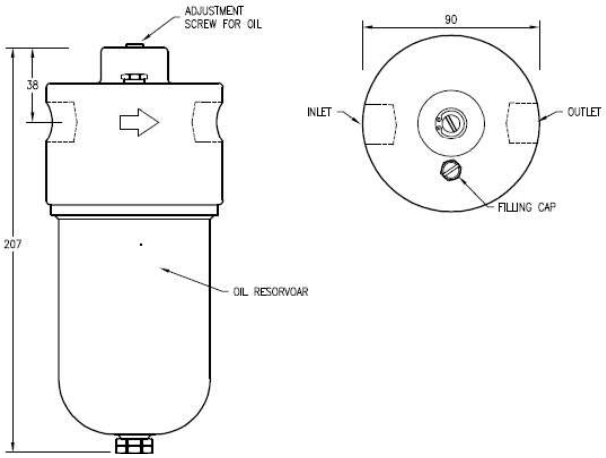



Håland
Instrumentering AS

Tangen 12, Dusavik, 4070 Randaberg - Norway
Phone: +47 51 71 97 00, Telefax: +47 51 71 97 01
E-post: post@hi-as.no , web: www.hi-as.no