Electric strike 14.400- - - - - - E31



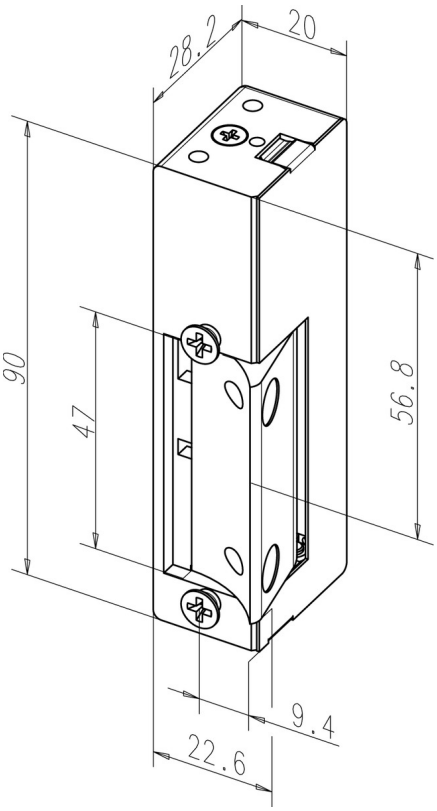

Product description

Electric strike for horizontal panic door locks. Suitable for the surface-mounted casing ATP-------20105-01

Overview of Advantages

- Vertical and horizontal mounting possible
- Due to 180° fitting, can be used DIN right and left

Scope of delivery

- 1 piece electric strike

Technical data

Handing	Universal
potential	12 V DC eE
Fail-locked	Yes
ATP	Yes
Rated operating voltage tolerance range	± 1 V
Rated resistance	60 Ohm
current consumption	125 mA
Current consumption DC (50% Residual ripple)	190 mA
Current consumption DC (stabilised)	200 mA
Height	90 mm
Depth	28 mm
Material housing	Zinc die-cast
Width	22,6 mm
Break-in resistance	3000 N
Operating temperature range	-15 °C to +40 °C
Installation position	Vertical and horizontal
Latch material	Coated brass
DIN-direction	universal

Article number	14.400------E31

ASSA ABLOY Sicherheitstechnik GmbH
Bildstockstraße 20 72458 Albstadt albstadt@assaabloy.com
Tel. + 497431 123-0 Fax + 497431 123-240 www.assaabloyopeningsolutions.de