

IP68

HIGH PERFORMANCE

Outdoor Waterproof Box
for 5G Technology!

WG series
WGPC series

IP68 High performance at 24-hours/1m-depth immersion



*Do not use underwater/underground.



With a silicone waterproof gasket, and supported by multiple enclosing screws from the rear side, it allows the enclosure to maintain a stable high waterproofing capability.

Weather-resistant ASA • PC/ASA material



ASA material is resistant to deterioration and discoloration due to ultraviolet rays. Perfect for outdoor communication or network devices. The WGPC series, made with PC/ASA resin provides superior heat resistance and flame retardancy.

Captive screws for easy maintenance

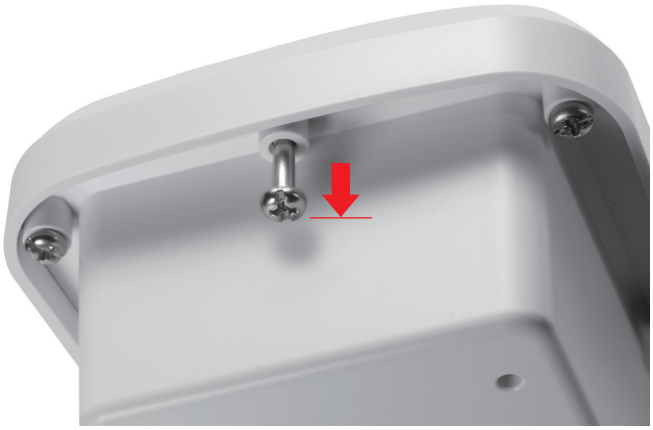

There is no risk of screws dropping out and lost during maintenance. Captive screw is able to lock into a pre-drilled hole to provide a secure hold.

Optional terminal blocks compatible

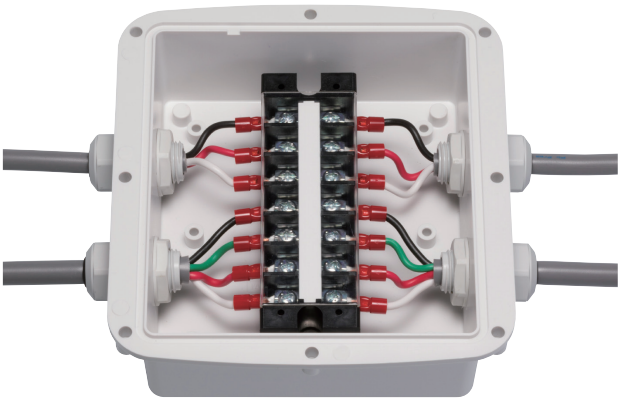

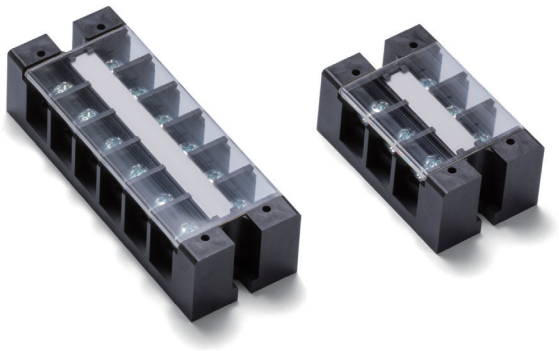

Optional terminal blocks, WTB series can be installed onto the existing bosses inside the WG • WGPC and WGV series box without additional processing or customization, hence can also function as a terminal junction box. (See page 115~116 for WTB terminal blocks.)

Easy installation on walls & poles

WALL MOUNTING BRACKET





POLE MOUNTING BRACKET









POLE MOUNTING STRAP







WG series IP68 WATERPROOF ASA BOX

NEW SIZE

WGPC series IP68 WATERPROOF PC+ASA BOX

NEW





- IP68 high performance plastic box protected from immersion as long as 24 hours at 1m depth.
- ASA material is resistant to deterioration and discoloration from ultraviolet rays.
  PC/ASA material provides superior heat resistance and flame retardancy.
  Perfect for use as outdoor communication or network devices.
- Self-tapping captive screws which are able to lock into a pre-drilled hole and provide a secure hold for fastening the cover. Please drive the self-tapping captive screws for cutting a thread into the holes at first so that the cover and body can be secured together properly.

IP68

Technical Data

Protection class :
IP68 (24-hours/1m-depth)
Operating temperature :
WG : -30°C ~ +60°C
WGPC : -30°C ~ +75°C
Recommended torque :
0.5 ~ 0.7N • m

*May become brittle and break under impact when temperature is lowered close to -30°C.

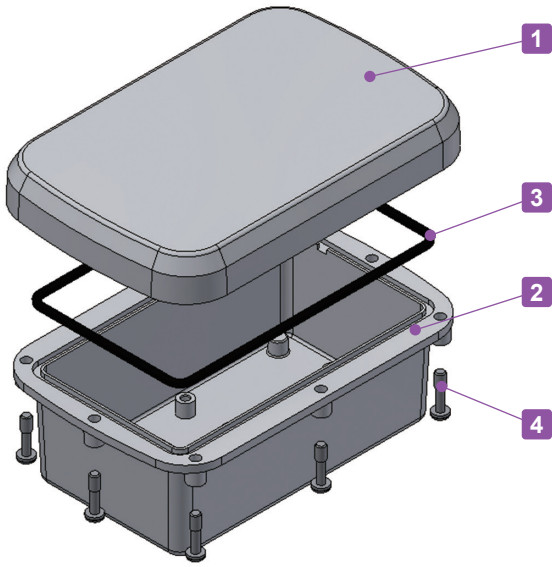

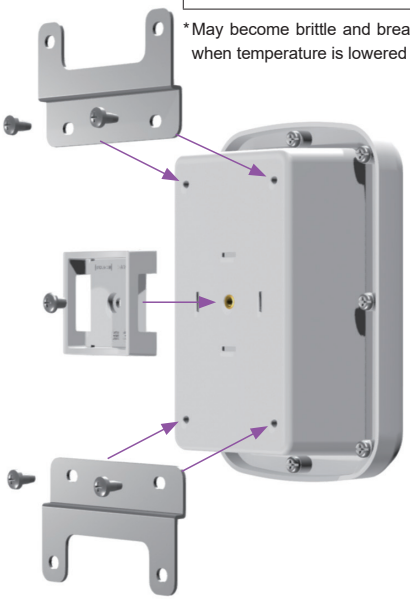

There are 5 holes on the backside of the body (4 at each corner, 1 in center). 4 corner holes are for wall mounting bracket, and 1 center hole is for pole mounting bracket.

WG Components

No.	Part name	Pcs	Material / Color
1	Cover	1	ASA UL94HB / Off-white
2	Body	1	ASA UL94HB / Off-white
3	Gasket	1	Silicone / Black
4	Self-tapping captive screw	8 ~ 10	Stainless steel / Unfinished

WGPC Components

No.	Part name	Pcs	Material / Color
1	Cover	1	PC/ASA UL94V-0 / Light gray
2	Body	1	PC/ASA UL94V-0 / Light gray
3	Gasket	1	Silicone / Black
4	Self-tapping captive screw	8 ~ 10	Stainless steel / Unfinished

Color

Series	Code	Color	Material
WG	W	Off-White	ASA UL94HB
WGPC	G	Light gray	PC/ASA UL94V-0

■ DXF/DWG/PDF/STP drawings available on our website.

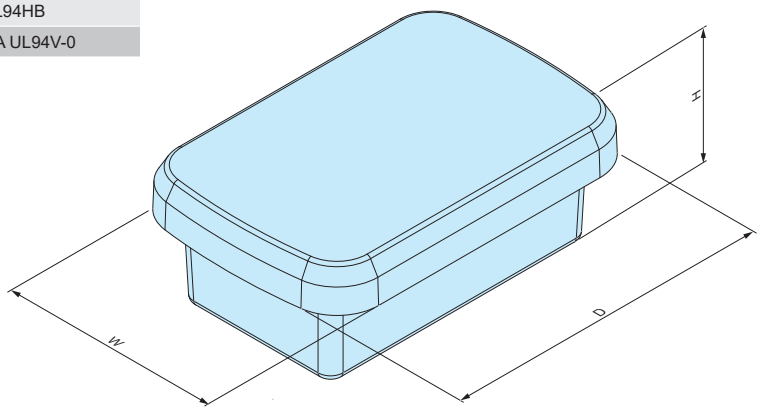

Product no. / Details

Product no.	External dimensions			Weight (g)
	W	D	H	
WG10-15- 6W	100	150	55	169.5
WG10-15- 8W	100	150	75	192
WG15-16- 6W	145	155	55	232
WG15-16- 8W	145	155	80	266.5
WG15-21- 6W	145	210	60	314
WG15-21- 9W	145	210	90	367
WG17-25- 8W	170	250	80	470
WG17-25-11W	170	250	110	534
WG23-25- 8W	225	245	80	570
WG23-25-11W	225	245	110	645
NEW WG25-33- 9W	245	325	90	965
NEW WG25-33-12W	245	325	120	1,073
NEW WG30-33- 9W	300	325	90	1,151
NEW WG30-33-13W	300	325	130	1,285.5
NEW WG28-40-10W	280	400	100	1,332.5
NEW WG28-40-15W	280	400	150	1,529.5

Product no. / Details

Product no.	External dimensions			Weight (g)
	W	D	H	
NEW WGPC10-15- 6G	100	150	55	188.5
NEW WGPC10-15- 8G	100	150	75	213.5
NEW WGPC15-16- 6G	145	155	55	258
NEW WGPC15-16- 8G	145	155	80	296.5
NEW WGPC15-21- 6G	145	210	60	349.5
NEW WGPC15-21- 9G	145	210	90	408.5
NEW WGPC17-25- 8G	170	250	80	523
NEW WGPC17-25-11G	170	250	110	594
NEW WGPC23-25- 8G	225	245	80	634
NEW WGPC23-25-11G	225	245	110	717.5
NEW WGPC25-33- 9G	245	325	90	1,073.5
NEW WGPC25-33-12G	245	325	120	1,193.5
NEW WGPC30-33- 9G	300	325	90	1,280
NEW WGPC30-33-13G	300	325	130	1,430
NEW WGPC28-40-10G	280	400	100	1,482
NEW WGPC28-40-15G	280	400	150	1,701

Accessories (Optional parts)



Wall mounting bracket WGF series
See page 112

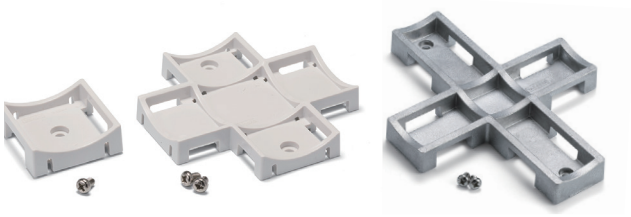

Pole mounting bracket WGMB • WPMB • SSK series
See page 113 ~ 114 and 205 ~ 206



Pole mounting strap • belt SNB • PKB series
See page 207 ~ 208

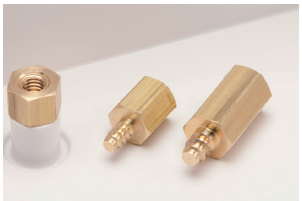

Tapping Standoff TPS series
See page 397

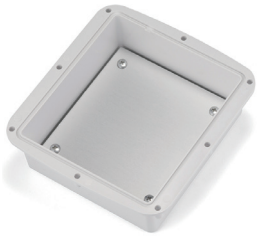

Mounting plate WGP series
See page 111



PCB mounting screw MT4-8T
See page 112



Terminal block WTB series
See page 115



DIN Rail FDR series
See page 97



Protective vent PMF series
See page 197 ~ 198



Cable gland
See page 181 ~ 193

WGV series IP68 PLASTIC ENCLOSURE with VENTILATION PLUG

NEW SIZE



- IP68 high performance plastic box protected from immersion as long as 24 hours at 1m depth where external (surroundings) and internal (inside box) pressure are different.
- ASA material is resistant to deterioration and discoloration from ultraviolet rays. Perfect for use as outdoor communication or network devices.
- Self-tapping captive screws which are able to lock into a pre-drilled hole and provide a secure hold for fastening the cover. Please drive the self-tapping captive screws for cutting a thread into the holes at first so that the cover and body can be secured together properly.

IP68

Technical Data

Protection class :
IP68 (24-hours/1m-depth)
Operating temperature :
-30°C ~ +60°C
Recommended torque :
0.5 ~ 0.7N • m
Ventilation plug recommended torque :
0.6 ~ 0.8N • m

*May become brittle and break under impact when temperature is lowered close to -30°C.

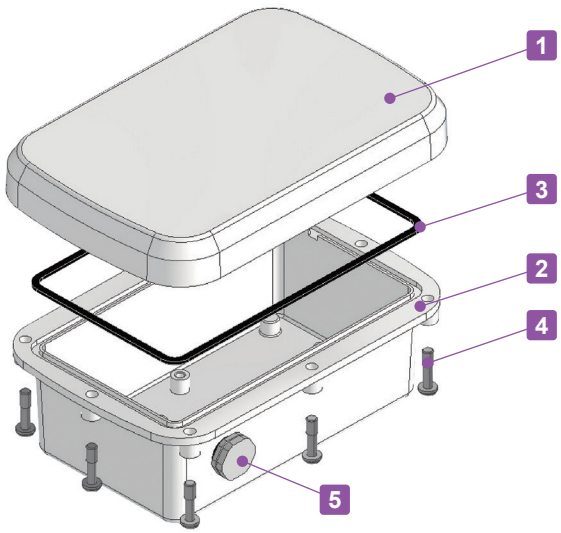

Ventilation plug protects the enclosure from deformation by equalizing pressure in environments where there are differences between strong daytime and low nighttime temperatures, as well as venting the gas generated within.



Components

No.	Part name	Pcs	Material / Color
1	Cover	1	ASA UL94HB / Off-white
2	Body	1	ASA UL94HB / Off-white
3	Gasket	1	Silicone / Black
4	Self-tapping captive screw	8 ~ 10	Stainless steel / Unfinished
5	Ventilation plug	1	PA66 + PA6 • PTFE / Light gray

WGV dimensions

■ DXF/DWG/PDF/STP drawings available on our website.

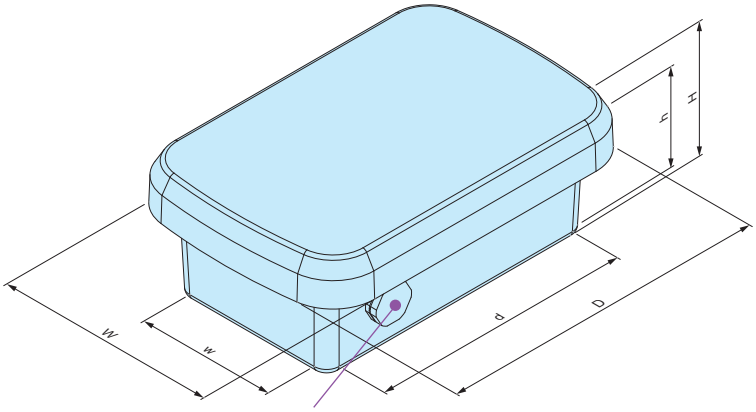

The location of the ventilation plug is pre-fixed.
*Customization for location change possible.

Product no. / Details

Product no.	External dimensions			Internal dimensions			Screw	Weight (g)
	W	D	H	w	d	h		
WGV10-15- 6W	100	150	55	58	115	43	M4× 8pcs	171
WGV10-15- 8W	100	150	75	57	114	63	M4× 8pcs	193.5
WGV15-16- 6W	145	155	55	102	120	43	M4× 8pcs	233.5
WGV15-16- 8W	145	155	80	100	118	68	M4× 8pcs	268
WGV15-21- 6W	145	210	60	102	174	48	M4×10pcs	315.5
WGV15-21- 9W	145	210	90	100	172	78	M4×10pcs	368.5
WGV17-25- 8W	170	250	80	125	209	67.5	M4×10pcs	471.5
WGV17-25-11W	170	250	110	122	206	97.5	M4×10pcs	535.5
WGV23-25- 8W	225	245	80	180	194	67.5	M4×10pcs	571.5
WGV23-25-11W	225	245	110	177	191	97.5	M4×10pcs	646.5
NEW WGV25-33- 9W	245	325	90	189	268	74	M4×10pcs	966.5
NEW WGV25-33-12W	245	325	120	186	265	104	M4×10pcs	1,075.5
NEW WGV30-33- 9W	300	325	90	244	268	74	M4×10pcs	1,152.5
NEW WGV30-33-13W	300	325	130	240	264	114	M4×10pcs	1,288
NEW WGV28-40-10W	280	400	100	223	338	84	M4×10pcs	1,335
NEW WGV28-40-15W	280	400	150	218	333	134	M4×10pcs	1,532

Accessories (Optional parts)



Wall mounting bracket WGF series
See page 112

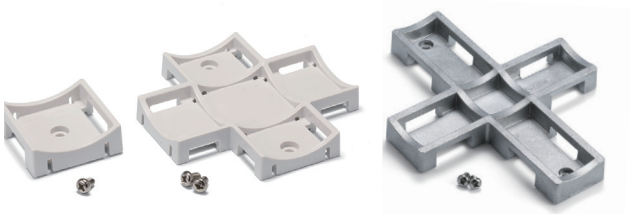

Pole mounting bracket WGMB • WPMB • SSK series
See page 113 ~ 114 and 205 ~ 206



Pole mounting strap • belt SNB • PKB series
See page 207 ~ 208

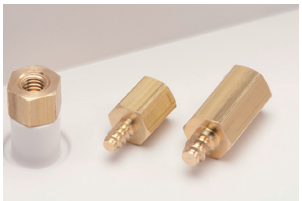

Tapping Standoff TPS series
See page 397

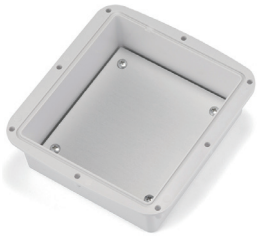

Mounting plate WGP series
See page 111



PCB mounting screw MT4-8T
See page 112



Terminal block WTB series
See page 115



DIN rail FDR series
See page 97



Protective vent PMF series
See page 197 ~ 198



Cable gland
See page 181 ~ 193

TAKACHI

WEATHERBILITY / DURABILITY TEST DATA for IP rated boxes

Weather resistance is the ability of a material to prevent corrosion, loss of material or any sort of deterioration due to prolonged exposure to harsh environmental and weather conditions.
The test data for our weather resistance waterproof/dustproof cases are as detailed below.

TEST DETAILS • TEST INSTRUMENT

Tester :	Super Xenon Weather Meter SX75 - Suga Test Instruments Co., Ltd.
	(Testing under conditions closest to the spectral distribution of sunlight by utilizing a xenon lamp and filter system.)
Irradiation Condition :	180 W/㎡ at 300 ～ 400nm
Black panel humidity :	63±3 °C
Relative Humidity :	50±10 %
Cycle conditions :	120 minutes (18 min. irradiation + water spay and 102 min. irradiation)
Test Time :	500 hours (continuous test)
Radiation Exposure :	324 MJ/㎡
Measurements :	Color measurements performed based upon JIS Z 8722 standard, with the results based upon JIS Z8781-4 standard.
	*Lesser color difference infers better weather resistance.

TEST DATA

*Test data results are reference data only; does not reflect actual usage conditions.

Before testing (plastic material color)



① ② ③ ④ ⑤ ⑥

After 500 hours testing (plastic material color)



No.	Target box / Material	Test time	Color difference △Eab
①	WP series - G color type ASA material	100 hrs. 500 hrs.	0.9 3.3
②	SPCP・SPCM series (Body) Glassfiber-filled Polycarbonate material	100 hrs. 500 hrs.	2.9 7.8
③	BCPC・BCPK series (Top cover) Polycarbonate material	100 hrs. 500 hrs.	3.8 7.9
④	BCPC・BCPK series (Base) Glassfiber-filled Polycarbonate material	100 hrs. 500 hrs.	4.7 8.6
⑤	SPCP・SPCM series (Cover) Polycarbonate material	100 hrs. 500 hrs.	3.7 10.6
⑥	BCAP series ABS material	100 hrs. 500 hrs.	3.6 10.8

Better weather reistance



WGP series MOUNTING PLATE for WG • WGPC • WGV





WGP dimensions

■ DXF/DWG/PDF/STP drawings available on our website.

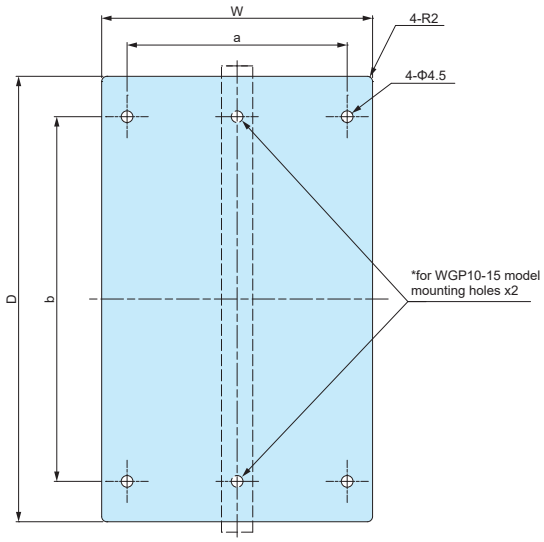

■ Material / Finish : A1100P (t=1.5mm) / Silver anodized

■ Hole milling, clinching spacer customizations are available.
See page Custom-6 and our website for more details.

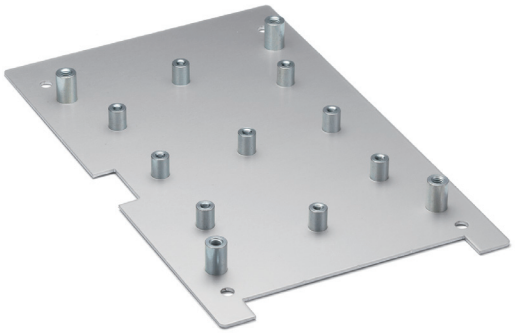

Product no. / Details

■ Mounting screws included.

Product no.	W	D	a	b	Suitable models	Weight (g)
WGP10-15	60	112	–	97	WG • WGPC • WGV10-15-□	30
WGP15-16	105	117	84.5	90	WG • WGPC • WGV15-16-□	54
WGP15-21	104	171	84.5	140	WG • WGPC • WGV15-21-□	76
WGP17-25	120	200	100	176	WG • WGPC • WGV17-25-□	100
WGP23-25	175	185	152	168	WG • WGPC • WGV23-25-□	133
NEW WGP25-33	178	254	154	230	WG • WGPC • WGV25-33-□	190
NEW WGP30-33	232	254	208	230	WG • WGPC • WGV30-33-□	247.5
NEW WGP28-40	210	322	184	298	WG • WGPC • WGV28-40-□	283

MT4-8T PCB MOUNTING SCREW



■ Self-tapping screws for board mounting on bosses inside WG, WGPC and WGV series enclosures.

Product no. / Details

Product no.	Material	Finish	Pack of
MT4-8T (Bind tapping M4-8)	Steel	Trivalent chromate	20

WGF series WALL MOUNTING BRACKET for WG • WGPC • WGV



WGF dimensions

■ DXF/DWG/PDF/STP drawings available on our website.

WGF-10 ~ WGF-25

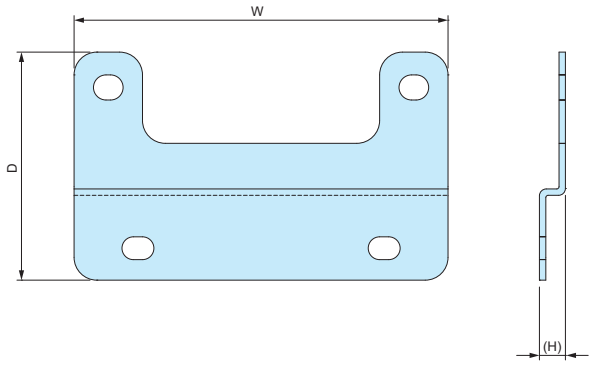

WGF-L

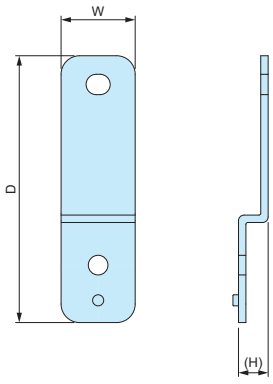

Product no. / Details

■ Stainless steel mounting screws included.

Product no.	W	D	(H)	Suitable models	Material / Finish	Pack of
WGF-10	82	50	(5.8)	WG • WGPC • WGV10-15-□ (W direction)	Stainless steel t=1.5mm / Barrel finish	2
WGF-15	132	50	(5.8)	WG • WGPC • WGV10-15-□ (D direction) WG • WGPC • WGV15-16-□ (W • D direction) WG • WGPC • WGV15-21-□ (W direction) WG • WGPC • WGV17-25-□ (W direction)		2
WGF-23	184	55	(8.0)	WG • WGPC • WGV15-21-□ (D direction) WG • WGPC • WGV23-25-□ (W direction)		2
WGF-25	210	55	(8.0)	WG • WGPC • WGV17-25-□ (D direction) WG • WGPC • WGV23-25-□ (D direction)		2
NEW WGF-L	20	72	(8.0)	WG • WGPC • WGV25-33-□ (W • D direction) WG • WGPC • WGV30-33-□ (W • D direction) WG • WGPC • WGV28-40-□ (W • D direction)	Stainless steel t=2.0mm / Barrel finish	4

WGMB-1W POLE MOUNTING BRACKET for WG • WGPC • WGV



■ DXF/DWG/PDF/STP drawings available on our website.

WGMB dimensions

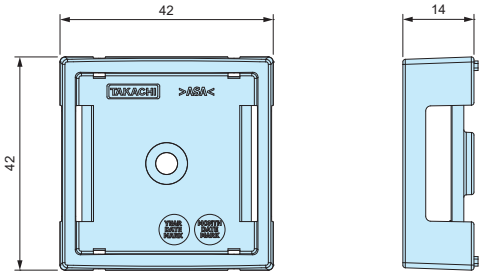

- Pole mount bracket made from weather resistant ASA material.
- Hole milling is not required when installing the mount bracket, thus allowing the enclosure to maintain its IP rating.
- WG • WGPC • WGV10-15-☐ and 15-16-☐ can be installed in both the W or D direction.
- Pole mount is possible with the use of SNB or PKB series mounting belt. (See website)

* Operating temperature : -30°C ~ +60°C

Product no. / Details

■ Mounting stainless steel screw included.

Product no.	Suitable models	Material / Color	Weight (g)	Pack of
WGMB-1W	WG • WGPC • WGV10-15-☐ / 1 pc required WG • WGPC • WGV15-16-☐ / 1 pc required WG • WGPC • WGV15-21-☐ / 2 pcs required	ASA UL94HB / Off-white	9	1

Installation example

Installation (1 pc)



Installation (2 pcs)



WPMB-M4-2G POLE MOUNTING BRACKET



■ DXF/DWG/PDF/STP drawings available on our website.

WPMB-M4-2 dimensions

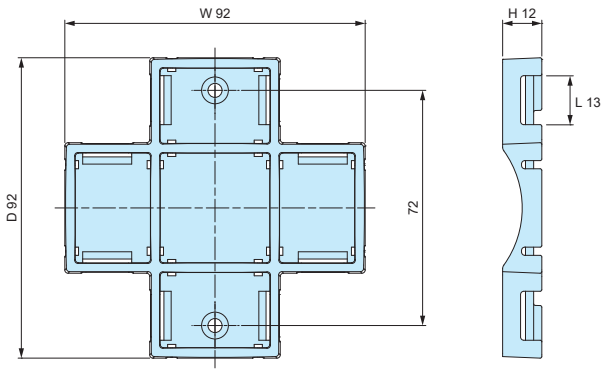

- Pole mount bracket made from weather resistant ASA material.
- Pole mounting belt can be installed in either W or D direction.
- Pole mount is possible with the use of PKB series mounting belt. (See page 208)
- Hole milling is not required when installing the mount bracket, thus allowing the enclosure to maintain its protection class.

*Stainless steel screw belt SNB series is not usable on WPMB-M4-2 series.

* Operating temperature : -30°C ~ +60°C

Color
White gray

Product no. / Details

■ Mounting stainless steel screw included.

Product no.	Suitable models	Recommended torque (N • m)	Weight (g)	Pack of
WPMB-M4-2G	WG • WGPC • WGV15-21-☐	0.45 ~ 0.5	24	1

■ Recommended torque listed is for reference only; actual may differ. Assemble after testing torque.

WGMB-2N DIECAST ALUMINIUM POLE MOUNTING BRACKET for WG • WGPC • WGV

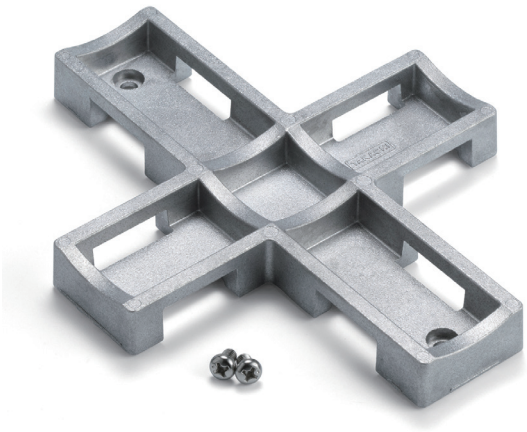

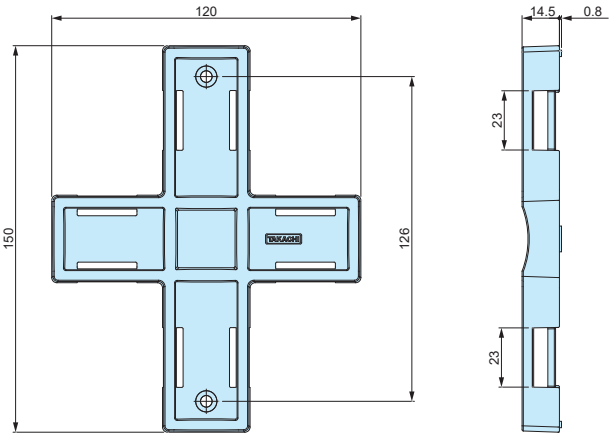

■ DXF/DWG/PDF/STP drawings available on our website.

- Pole mount bracket made from robust diecast aluminium.
- Hole milling is not required when installing the mount bracket, thus allowing the enclosure to maintain its protection class.
- Can be used for WG • WGPC • WGV17-25-□ and 23-25-□ models.
- Pole mounting belt can be installed in either W or D direction.
- Pole mount is possible with the use of SNB or PKB series mounting belt. (See page 207 ~ 208)

Product no. / Details

■ Stainless steel mounting screws included.

Product no.	Suitable models	Material / Finish	Weight (g)	Pack of
WGMB-2N	WG • WGPC • WGV17-25-□ WG • WGPC • WGV23-25-□	Diecast aluminium ADC12 / Shot blast	126	1

Installation example

WGMB-2N



Vertical mounting



Horizontal mounting



SSK series (Pole mounting bracket for WG • WGPC • WGV25-33-9 ~ 28-40-15)

SSK series



Vertical mounting

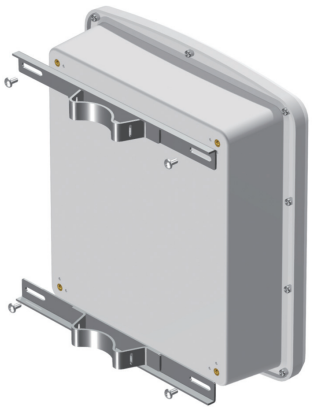

Suitable model

Product no.		Pole mounting bracket product no.		Screw type
		For vertical	For horizontal	
WG WGPC WGV	25-33- 9 25-33-12	SSK-250	SSK-300	Use included screw
	30-33- 9 30-33-13	SSK-300	SSK-300	
	28-40-10 28-40-15	SSK-280	SSK-400	

*See page 205 for details.

WTB series TERMINAL BLOCK for WG • WGPC • WGV

(FW2)

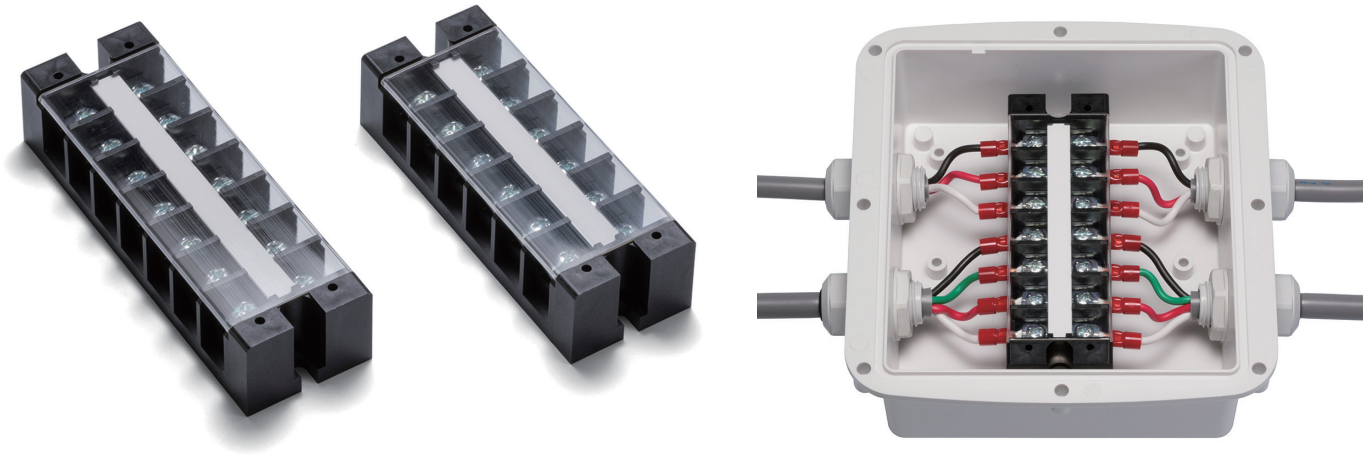

- Compatible terminal blocks for WG • WGPC • WGV series.
- Not suitable for WG • WGPC • WGV25-33-□ ~ 28-40-□.

Components

No.	Part name	Pcs	Material	Color or Finish
1	Base	1	PBT UL94V-0	Black
2	Conductive plate	1	Brass	Nickel plated
3	Terminal screw (M4-10)	2 x P	Steel	Trivalent chromate
4	Symbol board	1	PET	White
5	Cover	1	Polycarbonate UL94V-0	Transparent
—	Screw (Bind tapping M4-10)	2	Steel	Trivalent chromate

Specification

1. Electrical Rating 600V • 35A
2. Insulation Resistance DC500V 1000MΩ ~
3. Withstand Voltage AC2500V (Tested for 1 min.)
4. Rising Temp. 30°C or less
5. Operating Temp. Range -40°C ~ +90°C
6. Storage Temp. Range -40°C ~ +90°C

WTB dimensions

- DXF/DWG/PDF drawings available on our website.

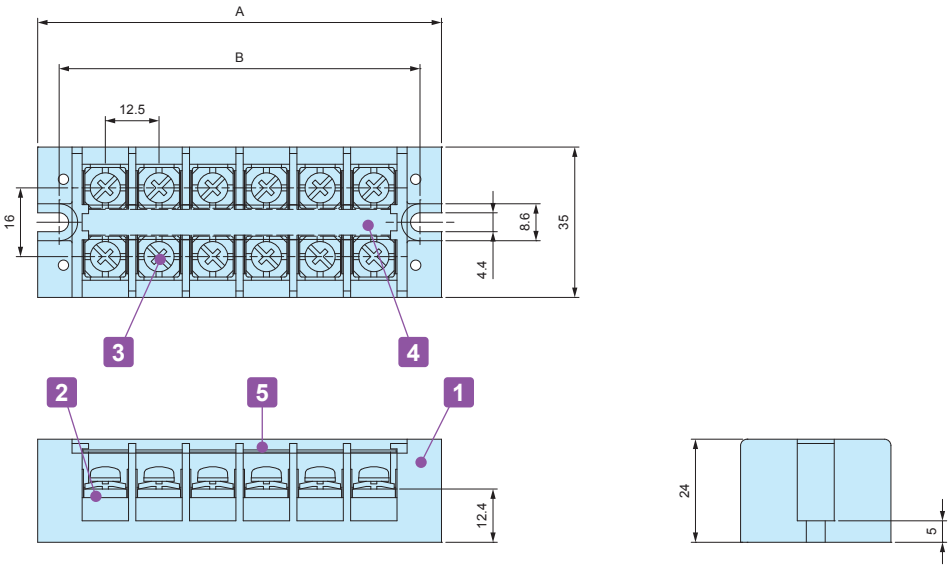

Product no. / Details

Product no.	P (Number of poles)	A	B	Suitable models
WTB-240- 3P-FB	3	56.5	46.5	WG • WGPC • WGV10-15-□ (W direction)
WTB-240- 6P-FB	6	94.0	84.0	WG • WGPC • WGV15-16-□, WG • WGPC • WGV15-21-□ (W direction)
WTB-240- 7P-FB	7	106.5	96.5	WG • WGPC • WGV10-15-□, WG • WGPC • WGV15-16-□ (D direction) WG • WGPC • WGV17-25-□ (W direction)
WTB-240-10P-FB	10	144.0	134.0	WG • WGPC • WGV15-21-□ (D direction) WG • WGPC • WGV23-25-□ (W direction)
WTB-240-12P-FB	12	169.0	159.0	WG • WGPC • WGV17-25-□, WG • WGPC • WGV23-25-□ (D direction)

WTB mounting layout

WG • WGPC • WGV10-15-□

WTB-240-3P

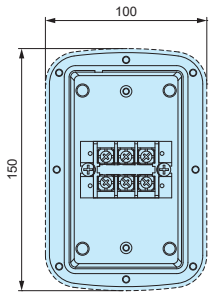

WTB-240-7P

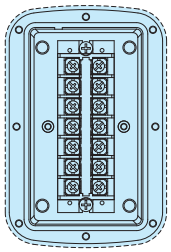

WG • WGPC • WGV15-16-□

WTB-240-6P

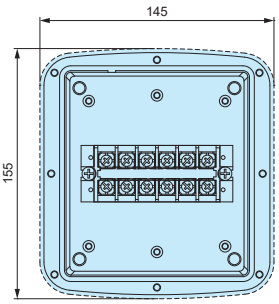

WTB-240-7P

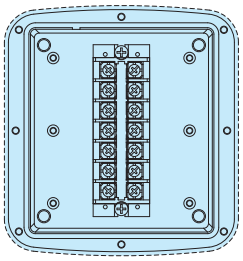

WG • WGPC • WGV15-21-□

WTB-240-6P

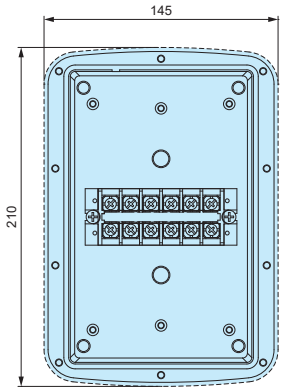

WTB-240-10P

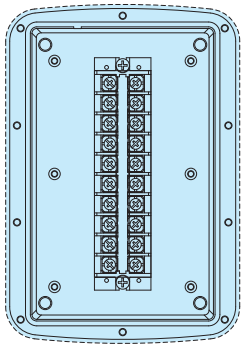

WG • WGPC • WGV17-25-□

WTB-240-7P

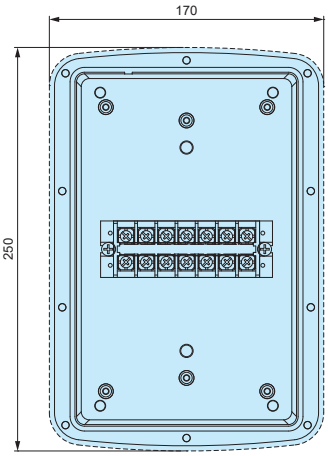

WTB-240-12P

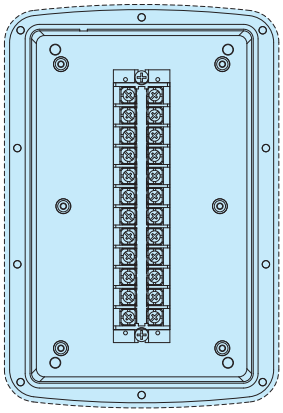

WG • WGPC • WGV23-25-□

WTB-240-10P

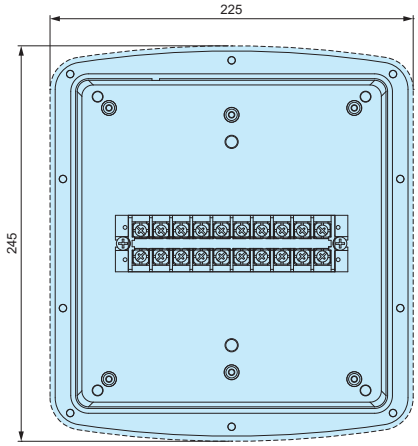

WTB-240-12P

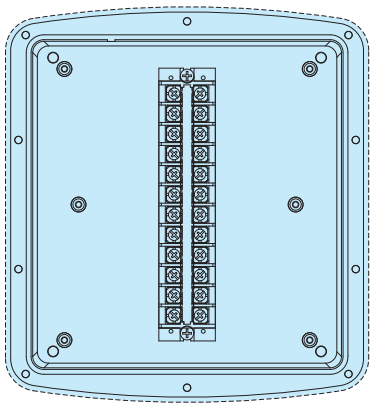

SCT series STAINLESS STEEL TIES for POLE MOUNTING

NEW





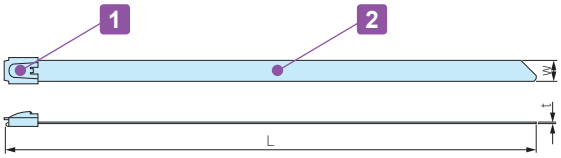

- Corrosion resistant stainless steel (SUS304) cable tie.
- Can be used to bundle cables or mounting enclosures to poles.
- Self-locking bracket allows easy mounting / cable bundling.
- Designed for one time use only (not reusable).

- Suitable for easy mounting.
- Wear gloves or other protections while installation.

Components

No.	Part name	Pcs	Material	Finish
1	Bracket	1	Stainless steel SUS304	Polished
2	Strap	1	Stainless steel SUS304	Polished

Product no. / Details

Product no.	W	L	t	Pack of
SCT 4.6- 100	4.6	100	0.25	10
SCT 4.6- 150	4.6	150	0.25	10
SCT 4.6- 200	4.6	200	0.25	10
SCT 4.6- 300	4.6	300	0.25	10
SCT 4.6- 500	4.6	500	0.25	2
SCT 4.6-1000	4.6	1,000	0.25	2
SCT 4.6-1500	4.6	1,500	0.25	2
SCT 7.9- 100	7.9	100	0.25	10
SCT 7.9- 150	7.9	150	0.25	10
SCT 7.9- 200	7.9	200	0.25	10
SCT 7.9- 300	7.9	300	0.25	10
SCT 7.9- 500	7.9	500	0.25	2
SCT 7.9-1000	7.9	1,000	0.25	2
SCT 7.9-1500	7.9	1,500	0.25	2

G3388 TIGHTEN GUN for SCT

NEW



Note: Tighten gun is not subject to RoHS regulations.

- Tool for cutting and tightening stainless steel strap.
  *Be careful of the sharp cut-edge of strap.

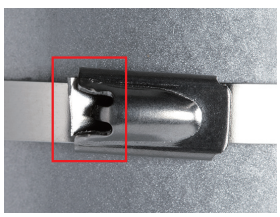

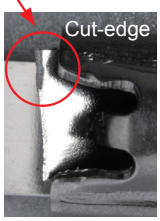

Product no.
G3388

SNB series STAINLESS STEEL POLE MOUNTING STRAP







SNB dimensions

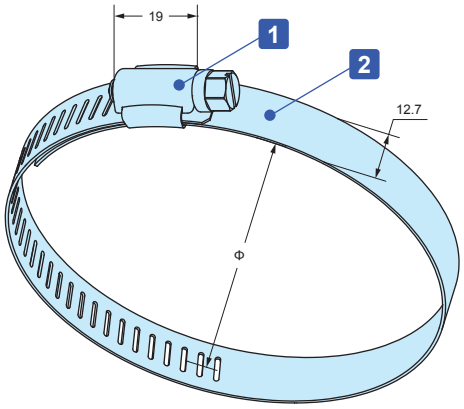

- Corrosion resistant stainless steel (SUS304) belt clamp.
- It can be installed securely by tightening the screw.
- 8 mm nut driver (box driver) is recommended for tightening. Flat-bladed screwdrivers can also be used.

Components

No.	Part name	Pcs	Material	Finish
1	Bracket	1	Stainless steel SUS304	Polished
2	Strap	1	Stainless steel SUS304	Polished

Product no. / Details

Product no.	Applicable diameter (Φ)	Strap width	Strap thickness	Recommended torque N • m	Weight (g)	Pack of
SNB 52- 76	52 ~ 76	12.7	0.6	0.7 ~ 1.0	27.5	1
SNB 72- 95	72 ~ 95	12.7	0.6	0.7 ~ 1.0	30	1
SNB 91-114	91 ~ 114	12.7	0.6	0.7 ~ 1.0	34.5	1
SNB105-127	105 ~ 127	12.7	0.6	0.7 ~ 1.0	37.5	1
SNB117-140	117 ~ 140	12.7	0.6	0.7 ~ 1.0	39.5	1
SNB130-153	130 ~ 153	12.7	0.6	0.7 ~ 1.0	41.5	1
SNB142-165	142 ~ 165	12.7	0.6	0.7 ~ 1.0	43.5	1
SNB155-178	155 ~ 178	12.7	0.6	0.7 ~ 1.0	46.5	1
SNB168-191	168 ~ 191	12.7	0.6	0.7 ~ 1.0	49	1
SNB181-204	181 ~ 204	12.7	0.6	0.7 ~ 1.0	51	1
SNB194-217	194 ~ 217	12.7	0.6	0.7 ~ 1.0	52.5	1
SNB207-230	207 ~ 230	12.7	0.6	0.7 ~ 1.0	57	1
SNB220-243	220 ~ 243	12.7	0.6	0.7 ~ 1.0	59.5	1
SNB233-256	233 ~ 256	12.7	0.6	0.7 ~ 1.0	62.5	1
SNB246-269	246 ~ 269	12.7	0.6	0.7 ~ 1.0	64	1
SNB259-282	259 ~ 282	12.7	0.6	0.7 ~ 1.0	67.5	1
SNB272-295	272 ~ 295	12.7	0.6	0.7 ~ 1.0	70	1
SNB285-308	285 ~ 308	12.7	0.6	0.7 ~ 1.0	71	1

- Recommended torque listed is for reference only; actual may differ. Assemble after testing torque.

SNB Strap required

Suitable series	Suitable models						Required
SSK series	SSK-S1	SSK-160	SSK-170	SSK-200	SSK-210	SSK-250	2
	SSK-280	SSK-300	SSK-350	SSK-400	SSK-530		
WGMB series	WGMB-1W						1

PKB series POLE MOUNTING BELT



PKB−10PM, 10P



PKB−10S, 20S

- Pole mounting belt for attachment of enclosures with suitable pole mount brackets or construction onto poles.
- Designed for one time use only (not reusable).
- Strong stainless steel clamping type and easy installation plastic type are available.

PKB dimensions

- DXF/DWG/PDF drawings available on our website.

PKB-10PM, 10P

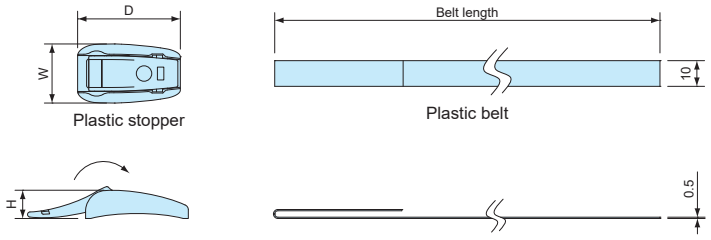

PKB-10S

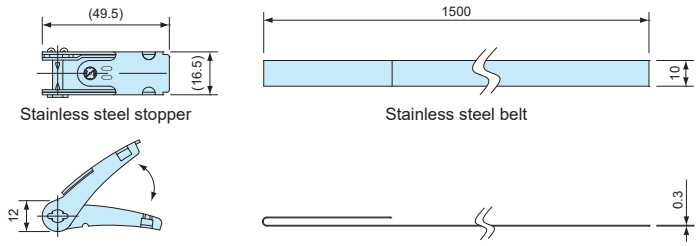

PKB-20S

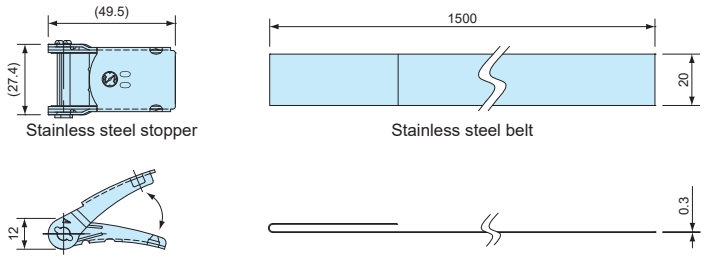

Components

Part name	Material	Color / Finish
Stopper	Stainless steel SUS304 • POM	Barrel finish • Black
Belt	Stainless steel SUS430 • PET	Bright annealed finish • Gray

Product no. / Details

Product no.	W	D	H	Belt length	Belt material	Tensile strength (horizontal)	Weight (g)	Pack of
PKB-10PM	23	24	11	500 mm	PET	0.8kN	14	2
PKB-10P	23	40	11	1,500 mm	PET	1.3kN	31.8	2
PKB-10S	—	—	—	1,500 mm	Stainless steel SUS304	1.4kN	101.6	2
PKB-20S	—	—	—	1,500 mm	Stainless steel SUS430	2.9kN	182.2	2

TPS series TAPPING STANDOFF





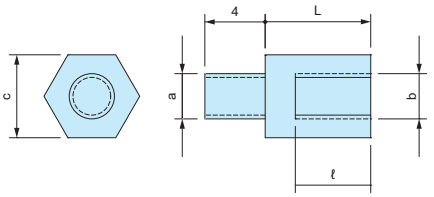

- Tapping screw head allows for easy installation onto existing enclosure boss mount.
- 4 different sizes available : M2.3, M2.6, M3 and M4 size.
- DXF/DWG/PDF drawings available on our website.

Product no. / Details

- Material / Finish : Brass / Unfinished

Product no.	Screw size (a)	Screw size (b)	c	L	ℓ	Weight (g)	Pack of	Suitable models
TPS-M2.3-4	2.3	M2.3	5	4	3	0.7	4	WH series • PFE series LC • LCE • LCS • LCT series PF • PFF series (M2.3 boss models) TW • TWN • TWF series (M2.3 boss models) WP series (M2.3 boss models)
TPS-M2.3-5	2.3	M2.3	5	5	3	0.9	4	
TPS-M2.3-6	2.3	M2.3	5	6	4	1	4	
TPS-M2.3-7	2.3	M2.3	5	7	5	1.2	4	
TPS-M2.3-8	2.3	M2.3	5	8	6	1.3	4	
TPS-M2.3-10	2.3	M2.3	5	10	6	1.7	4	
TPS-M2.3-12	2.3	M2.3	5	12	6	2	4	
TPS-M2.6-4	2.6	M2.6	5	4	3	0.7	4	PF • PFF series (M2.6 boss models) WP series (M2.6 boss models)
TPS-M2.6-5	2.6	M2.6	5	5	3	0.8	4	
TPS-M2.6-7	2.6	M2.6	5	7	5	1.1	4	
TPS-M2.6-10	2.6	M2.6	5	10	6	1.6	4	
TPS-M2.6-12	2.6	M2.6	5	12	6	2	4	
TPS-M3-4	3	M3	5.5	4	3	0.8	4	SU • OP TWS • TW • TWN • TWF series (M3 boss models)
TPS-M3-5	3	M3	5.5	5	3	1.1	4	
TPS-M3-6	3	M3	5.5	6	4	1.2	4	
TPS-M3-7	3	M3	5.5	7	5	1.3	4	
TPS-M3-8	3	M3	5.5	8	5	1.6	4	
TPS-M3-10	3	M3	5.5	10	6	1.9	4	
TPS-M3-12	3	M3	5.5	12	6	2.3	4	
TPS-M4-6	4	M4	7	6	4	2	4	BCAS • BCAP • BCPC • BCPK series (M4 boss models) BCAR • BCPR series (M4 boss models) SPCP • SPCM • WG • WGV • WGPC
TPS-M4-10	4	M4	7	10	6	3.1	4	
TPS-M4-15	4	M4	7	15	8	4.7	4	
TPS-M4-20	4	M4	7	20	10	6.5	4	



- Please use a suitable sized socket driver to both secure and loosen the tapping standoff.

Installation example



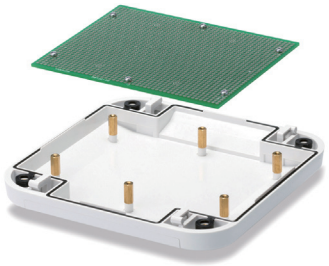

MT series PCB MOUNTING SCREWS for TPS

NEW SIZE

Pan head

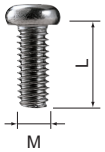

- Pan head PCB mounting Screws for TPS tapping standoffs.

Product no. / Details

Product no.	M	L	Material	Finish	Pack of
MT2.3-4	2.3	4	Steel	Trivalent chromate	20
MT2.3-6	2.3	6	Steel	Trivalent chromate	20
MT2.6-4	2.6	4	Steel	Trivalent chromate	20
NEW MT2.6-6	2.6	6	Steel	Trivalent chromate	20
MT3-4	3	4	Steel	Trivalent chromate	20
NEW MT3-6	3	6	Steel	Trivalent chromate	20
NEW MT4-4	4	4	Steel	Trivalent chromate	20
NEW MT4-6	4	6	Steel	Trivalent chromate	20

PMF series PROTECTIVE VENT

Pressure Equalization / Ventilation





Application Example

- Protective vent protects the enclosure from deformation by equalizing internal and external pressure differences, as well as venting the gas generated within the enclosure.
- IP68 protection class (water depth 2 meters / 60 mins) with an operating temperature range -40°C ~ +125°C allows them to be used in harsh environments.
- PMF-12 and PMF-12HS models are suitable for up to 5 and 50 liters respectively.
- Recommended to be installed at the sides of the enclosure.
- Use in industrial and electrical / electronic products only; not suitable to be used in medical, food and beverage, and cosmetic industries and related industrial equipment.

PMF dimensions

- DXF/DWG/PDF drawings available on our website.

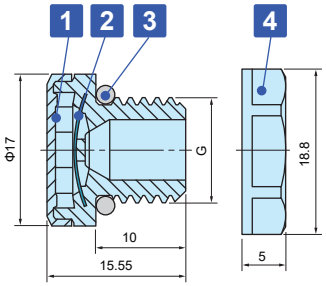

Hole milling drawings

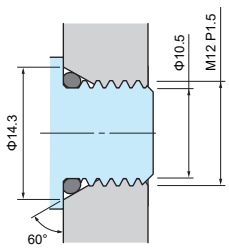

- Recommended for prevention of O-ring deformation during tightening.
  If tightened with a lock nut, a standard through-hole is sufficient for installation.

Installation drawings

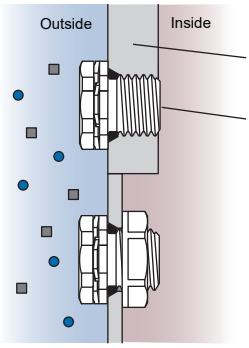

- If used with a lock nut, material thickness should not exceed 4.0mm.

Technical Data

Product no.	PMF-12	PMF-12HA
Airflow	450ml / min (dp = 7kPa)	4,000ml / min (dp = 7kPa)
Recommended torque	0.6 ~ 0.8N • m	0.6 ~ 0.8N • m
Certifications	IEC60529 (Protection class test) : IP65 • IP66 • IP67 • IP68 • IP69K IEC60068-2-1, 2, 14 (Heat resistance test) : - 40°C ~ +125°C IEC60068-2-78 (Humidity test) : 85°C • 85% humidity • 1,000 hours IEC60068-2-11, 52 (Salt spray test) IEC60068-2-64 (Vibration test) GR-3108-CORE (Corrosive gas test) UL94V-0 (Flame-resistant) • UL746C f1	

Product no. / Details

Product no.		Material				G		Lock nut SW
● Light gray	● Black	1 Housing	2 Filter	3 O-ring	4 Lock nut	Thread size	Mount hole	
PMF-12S	PMF-12B	PA66 / 6	PTFE	Silicone	PA66 (UL94V-2)	M12 x P1.5	Φ12.2	17
PMF-12HAS	PMF-12HAB	PA66 / 6	PTFE	Silicone	PA66 (UL94V-2)	M12 x P1.5	Φ12.2	17

PMF-32S LARGE PROTECTIVE VENT

Pressure Equalization / Ventilation

IP68 IP69K





Application Example

- Maintains exceptionally high airflow in extra-large enclosures with volumes of up to 200 liters in an outdoor environment.
- Protective vent protects the enclosure from deformation by equalizing internal and external pressure differences, as well as venting the gas generated within the enclosure.
- Simple and flat design allows it to be used on a wide variety of enclosure types.
- IP68 protection class rated (water depth 2 meters / 60 mins) with an operating temperature range of -40°C ~ +125°C allows it to be used in harsh environments.
- Compliant with Solar industry testing IEC62108 standards.
- Recommended to be installed at the sides of the enclosure.
- Use in industrial and electrical / electronic products only; not suitable to be used in medical, food and beverage, and cosmetic industries and related industrial equipment.

■ DXF/DWG/PDF drawings available on our website.

PMF-32 dimensions

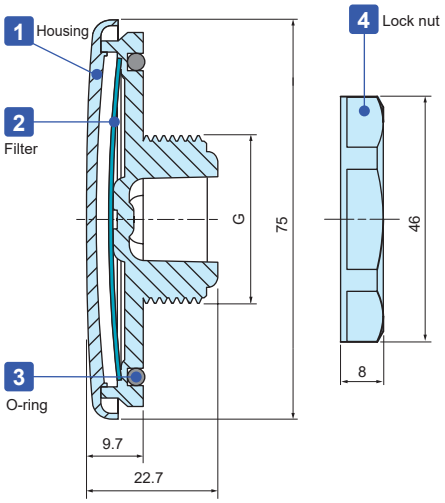

Hole milling drawings

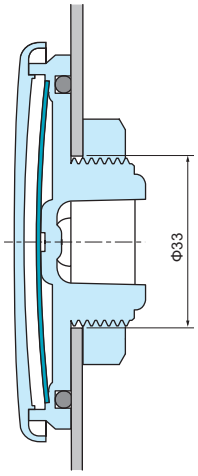

Installation drawings

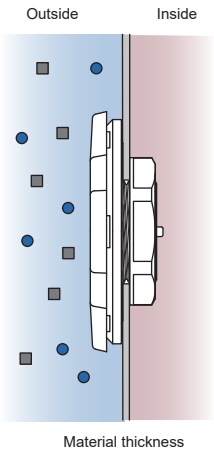

■ If used with a lock nut, material thickness should not exceed 5.0mm.

Technical Data

Airflow	16ℓ / min (dp = 1.2kPa)
Recommended torque	5 N • m
Certifications	IEC529, 2nd (Protection class test) : IP66 • IP67 • IP68 • IP69K IEC60068-2-1, 2, 14 (Heat resistance test) : - 40°C ~ +125°C IEC60068-2-78 (Humidity test) : 85°C • 85% humidity • 1,000 hours IEC60068-2-11, 52 (Salt spray test)　IEC60068-2-64 (Vibration test) IEC62108, 10.8 • 9 (Solar industry test) : Freezing • High temperature tes • Hail impact test GR-3108-CORE (Corrosive gas test)　UL94V-0 (Flame-resistant) • UL746C f1

Product no. / Details

Product no.	Material				G			Lock nut SW
	1 Housing	2 Filter	3 O-ring	4 Lock nut	Thread size	Thread diameter	Mount hole	
PMF-32S	Polycarbonate	PTFE	Silicone	PA66	M32 x P1.5	Φ32	Φ33	41.5

VE8 series ADHESIVE PROTECTIVE VENT FILTER



Technical Data
Protection class : Dustproof IP6X Waterproof IPX4, IPX7 Airflow: 3,300ml/min/cm2 (at 7Kpa) Operating temperature: -40°C ~ +100°C

- Vent filter protects the enclosure from deformation by equalizing internal and external pressure differences, as well as venting the gas generated within the enclosure.
- Allows water vapor molecules to diffuse through the microporous membrane.
- Highly water and oil repellent membrane protects electronic components from water, corrosive liquids, salts and dust.
- Easy installation adhesive filter.
- Recommended to be adhered onto flat plastic or metallic surfaces.

CAUTION

- Install only on the inner surface of the case / box with the membrane and adhesive side facing outwards.
- An initial period of 24 hours is required for the adhesive to properly bond to the surface. Avoid using the vent filter with a heavy load.
- Please do not adhere onto the top-side of enclosures. Rain water etc. will collect on the filter, which will weaken the adhesive seal and prevent proper ventilation.
- After degreasing and cleaning, adhere the filter without touching the center part of the vent filter.
- Use in industrial and electrical / electronic products only; not suitable to be used in medical, food and beverage, and cosmetic industries and related industrial equipment.

VE8 drawings

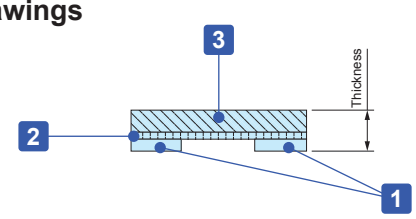

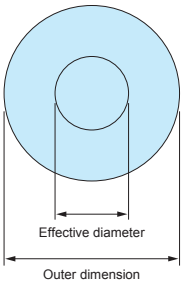

Installation drawings

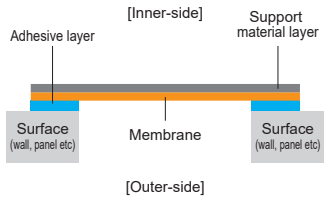

Adhesive type protective vent filter can be installed on any flat surface.

Components

No.	Part name	Material	Color
1	Adhesive	Acrylic adhesive	Transparent
		Silicon adhesive (VE82029S, VE82029S-S)	
2	Filter	ePTFE (Oil-repellent type)	White
3	Support material	Polyester fabric	White

Product no. / Details

Product no.	Outer dimension (Φ·mm)	Effective diameter (Φ·mm)	Thickness (mm)	Sales unit
VE80308	7.6	3.3	0.26	8 pcs (per pack)
VE80814	14.0	8.0	0.26	4 pcs (per pack)
VE81221	21.5	12.5	0.26	4 pcs (per pack)
VE82029S	29.0	20.0	0.35	2 pcs (per pack)
VE80308-S	7.6	3.3	0.26	96 pcs (per sheet)
VE80814-S	14.0	8.0	0.26	56 pcs (per sheet)
VE81221-S	21.5	12.5	0.26	20 pcs (per sheet)
VE82029S-S	29.0	20.0	0.35	10 pcs (per sheet)

RMW series WEATHERPROOF CABLE GLAND





IP67

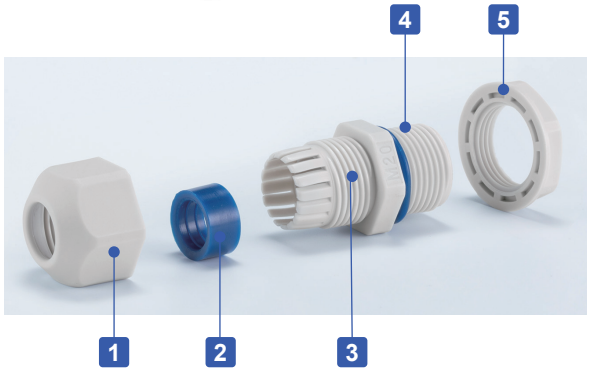

- Weatherproof cable gland equipped with high ultraviolet and degradation resistant silicone sealing insert and O-ring.
- Recommended to use outdoors where waterproofing is critical.
- Protection class equivalent to IP67.

Components

■ PA = Polyamide

No.	Part name	Material
1	Cap	PA66 UL94V-2
2	Sealing insert	Silicone
3	Connector	PA66 UL94V-2
4	O-ring	Silicone
5	Lock nut	PA66 UL94V-2

RMW dimensions

- DXF/DWG/PDF drawings available on our website.

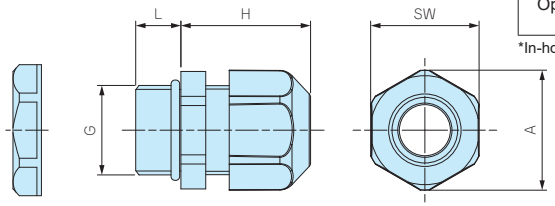

- Lock nut is not included for RMW10S-6.
  Please drill a proper thread hole into the enclosure for installation.

Technical Data
Protection class: Equivalent to IP67* Operating temperature: -20°C ~ +80°C

*In-house test

Cap design varies by size



RMW40 or smaller | RMW50

Product no. / Details

Product no.		G		Cable range		L	H Max	SW	A	Pack of
● Black	● Light gray	Thread size	Mounting hole	Min	Max					
RMW8L-2.5B	RMW8L-2.5S	M8×1.25	Φ8.2	1	2.5	13	19.5	12	13.6	1
RMW8L-4B	RMW8L-4S	M8×1.25	Φ8.2	2.5	4	13	19.5	12	13.6	1
RMW10S-6B	RMW10S-6S	M10×1.5	—	3	6	8	20.5	13	14.6	1
RMW10L-6B	RMW10L-6S	M10×1.5	Φ10.2	3	6	13	20.5	13	14.6	1
RMW12S-7B	RMW12S-7S	M12×1.5	Φ12.2	3.5	7	9	20.5	16	17.7	1
RMW12L-7B	RMW12L-7S	M12×1.5	Φ12.2	3.5	7	14.5	20.5	16	17.7	1
RMW16S-8B	RMW16S-8S	M16×1.5	Φ16.2	4	8	9	23.5	19.2	21.3	1
RMW16L-8B	RMW16L-8S	M16×1.5	Φ16.2	4	8	15	24	19.2	21.3	1
RMW20S-12B	RMW20S-12S	M20×1.5	Φ20.2	6	12	10	29	24.3	26.8	1
RMW20L-12B	RMW20L-12S	M20×1.5	Φ20.2	6	12	15	28.5	24.3	26.8	1
RMW25L-17B	RMW25L-17S	M25×1.5	Φ25.2	11	17	15	35	33.3	36.8	1
RMW32L-21B	RMW32L-21S	M32×1.5	Φ32.3	13	21	15	38	36.1	39.8	1
RMW40L-27B	RMW40L-27S	M40×1.5	Φ40.3	18	27	18	43.5	46.1	51.2	1
RMW50L-38B	RMW50L-38S	M50×1.5	Φ50.4	27	38	20	50.5	60	66.5	1
RMW10L-6B-P	RMW10L-6S-P	M10×1.5	Φ10.2	3	6	13	20.5	13	14.6	100
RMW12S-7B-P	RMW12S-7S-P	M12×1.5	Φ12.2	3.5	7	9	20.5	16	17.7	100
RMW12L-7B-P	RMW12L-7S-P	M12×1.5	Φ12.2	3.5	7	14.5	20.5	16	17.7	100
RMW16S-8B-P	RMW16S-8S-P	M16×1.5	Φ16.2	4	8	9	23.5	19.2	21.3	100
RMW16L-8B-P	RMW16L-8S-P	M16×1.5	Φ16.2	4	8	15	24	19.2	21.3	100
RMW20S-12B-P	RMW20S-12S-P	M20×1.5	Φ20.2	6	12	10	29	24.3	26.8	100
RMW20L-12B-P	RMW20L-12S-P	M20×1.5	Φ20.2	6	12	15	28.5	24.3	26.8	100

RMW series silicone sealing insert weatherproof test report

Object: Cut into a piece of the silicone sealing insert from RMW series and attach it onto an aluminium plate.
For comparison, NBR sealing insert from our RM and EPDM sealing insert from another manufacturer is also attached.

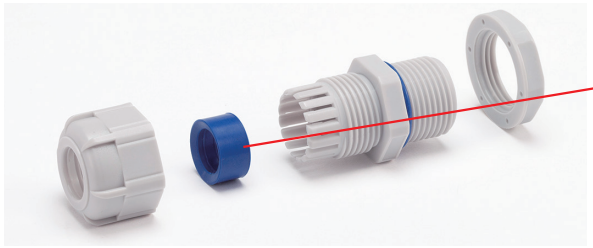

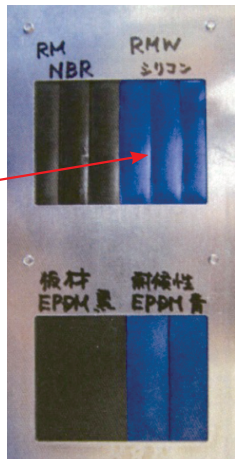

Before

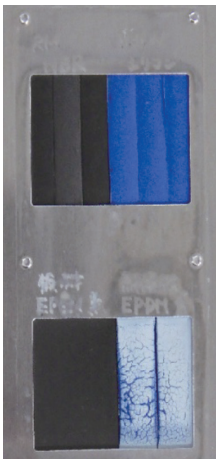

After

Testing conditions

Equipment : 7.5kW Super Xenon Weather Meter SX75 (Suga Test Instruments Co., Ltd.- http://www.sugatest.co.jp/english/)

Conditions : JIS B7754 : 1991
Testing with an authorized Xenon arc lamp weathering test equipment under the conditions denoted below.
Irradiance : 180W/m^2 at 300-400nm
Black Panel Temperature : 63±3°C Humidity Range : 50±10%
Cycle Conditions : 120 minutes cycle (18 minutes irradiation + water spray - 102 minutes irradiation)

Time period : 2,000 hours (equivalent to a period of 4 years under natural conditions)

Total radiant exposure : 1296MJ/m^2

Test result (visual / touch inspection)

Silicone sealing insert material : No cracks, no gloss transition, no powder - no appearance change at all. Flexibility remains unchanged.

Before

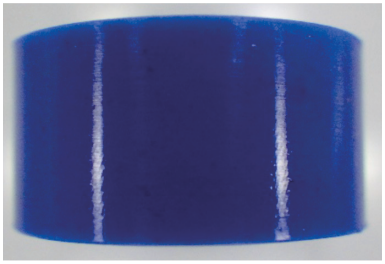

After

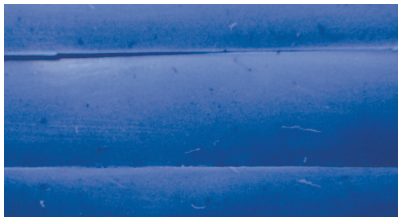

NBR material from our RM series : Lost glossiness on the surface and material is stiffened.

Before



After



EPDM material from weatherproof cable gland of another manufacturer : Cracked, color drastically faded and powder appeared on the surface.

Before

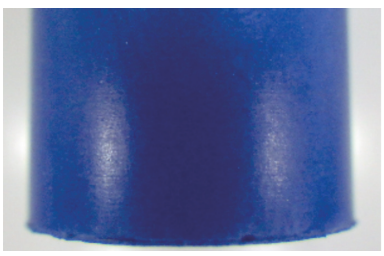

After

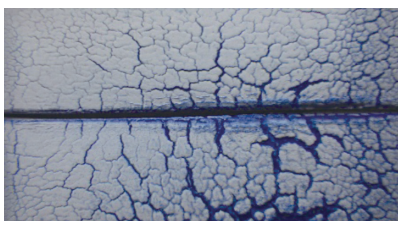

RM series POLYAMIDE CABLE GLAND



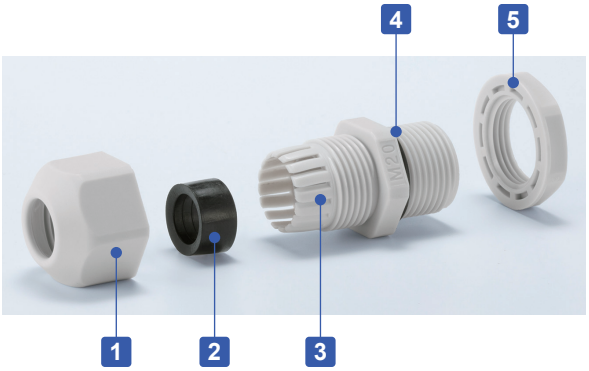

- Low cost cable glands made from polyamide material.
- Wide selection, for M8 ~ M63, suitable for Φ1mm ~ Φ44 mm cable.
- High oil resistant NBR rubber sealing and O-ring.
- Protection class equivalent to IP67.

Technical Data
Protection class: Equivalent to IP67* Operating temperature: -20°C ~ +80°C

*In-house test

Components

■ PA = Polyamide

No.	Part name	Material
1	Cap	PA66 UL94V-2
2	Sealing insert	NBR
3	Connector	PA66 UL94V-2
4	O-ring	NBR
5	Lock nut	PA66 UL94V-2

RM dimensions

■ DXF/DWG/PDF drawings available on our website.

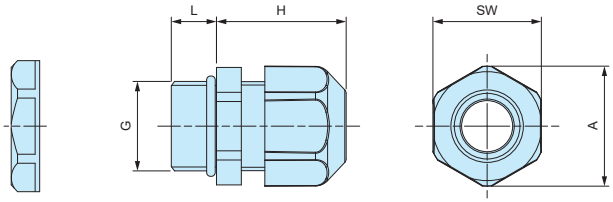

■ Lock nut is not included for RM8S-2.5, 8S-4, and 10S-6 models.
Please drill an appropriate thread hole into the enclosure for installation.

Cap design varies by size



RM40 or smaller | RM50 or larger

Product no. / Details

Product no.		G		Cable range		L	H Max	SW	A	Pack of
● Black	● Light gray	Thread size	Mounting hole	Min	Max					
RM8S-2.5B	RM8S-2.5S	M8×1.25	—	1	2.5	7.5	19.5	12	13.6	1
RM8L-2.5B	RM8L-2.5S	M8×1.25	Φ8.2	1	2.5	13	19.5	12	13.6	1
RM8S-4B	RM8S-4S	M8×1.25	—	2.5	4	7.5	19.5	12	13.6	1
RM8L-4B	RM8L-4S	M8×1.25	Φ8.2	2.5	4	13	19.5	12	13.6	1
RM10S-6B	RM10S-6S	M10×1.5	—	3	6	8	20.5	13	14.6	1
RM10L-6B	RM10L-6S	M10×1.5	Φ10.2	3	6	13	20.5	13	14.6	1
RM12S-7B	RM12S-7S	M12×1.5	Φ12.2	3.5	7	9	20.5	16	17.7	1
RM12L-7B	RM12L-7S	M12×1.5	Φ12.2	3.5	7	14.5	20.5	16	17.7	1
RM16S-8B	RM16S-8S	M16×1.5	Φ16.2	4	8	9	23.5	19.2	21.3	1
RM16L-8B	RM16L-8S	M16×1.5	Φ16.2	4	8	15	24	19.2	21.3	1
RM20S-12B	RM20S-12S	M20×1.5	Φ20.2	6	12	10	29	24.3	26.8	1
RM20L-12B	RM20L-12S	M20×1.5	Φ20.2	6	12	15	28.5	24.3	26.8	1
RM25L-17B	RM25L-17S	M25×1.5	Φ25.2	11	17	15	35	33.3	36.8	1
RM32L-21B	RM32L-21S	M32×1.5	Φ32.3	13	21	15	38	36.1	39.8	1
RM40L-27B	RM40L-27S	M40×1.5	Φ40.3	18	27	18	43.5	46.1	51.2	1
RM50L-38B	RM50L-38S	M50×1.5	Φ50.4	27	38	20	50.5	60	66.5	1
RM63L-44B	RM63L-44S	M63×1.5	Φ63.4	37	44	20	53	68	75.5	1
RM10L-6B-P	RM10L-6S-P	M10×1.5	Φ10.2	3	6	13	20.5	13	14.6	100
RM12S-7B-P	RM12S-7S-P	M12×1.5	Φ12.2	3.5	7	9	20.5	16	17.7	100
RM12L-7B-P	RM12L-7S-P	M12×1.5	Φ12.2	3.5	7	14.5	20.5	16	17.7	100
RM16S-8B-P	RM16S-8S-P	M16×1.5	Φ16.2	4	8	9	23.5	19.2	21.3	100
RM16L-8B-P	RM16L-8S-P	M16×1.5	Φ16.2	4	8	15	24	19.2	21.3	100
RM20S-12B-P	RM20S-12S-P	M20×1.5	Φ20.2	6	12	10	29	24.3	26.8	100
RM20L-12B-P	RM20L-12S-P	M20×1.5	Φ20.2	6	12	15	28.5	24.3	26.8	100
RM25L-17B-P	RM25L-17S-P	M25×1.5	Φ25.2	11	17	15	35	33.3	36.8	100

RSP series STRAIN RELIEF CABLE GLAND



- A total of 14 models available for selection.
- Strain relief cap protects cables by preventing it from bending beyond its limit and breaking.
- Economical price but high waterproofing capability equivalent to IP67.

Technical Data
Protection class : Equivalent to IP67*
Operating temperature : -20°C ~ +80°C

*In-house test

RSP dimensions

- DXF/DWG/PDF drawings available on our website.

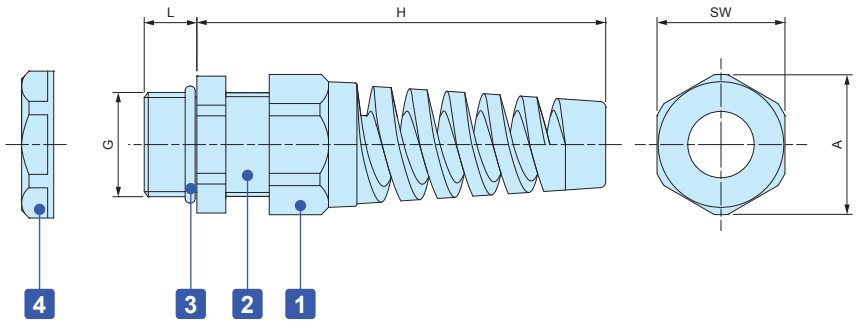

Components

- PA = Polyamide

No.	Part name	Material
1	Stain relief cap	PA66 UL94V-2
-	Sealing insert	NBR
2	Connector	PA66 UL94V-2
3	O-ring	NBR
4	Lock nut	PA66 UL94V-2

Product no. / Details

Product no.		G		Cable range		L	H	SW	A	Pack of
● Black	● Light gray	Thread size	Mounting hole	Min	Max					
RSP 8-2.5B	RSP 8-2.5S	M 8×1.25	Φ 8.2	1	2.5	10.5	48	12.1	13.8	1
RSP 8-4B	RSP 8-4S	M 8×1.25	Φ 8.2	2.5	4	10.5	48	12.1	13.8	1
RSP10-6B	RSP10-6S	M10×1.5	Φ10.2	3	6	12.2	54	13.1	14.5	1
RSP12-6B	RSP12-6S	M12×1.5	Φ12.2	3.5	6	9	62	16	17	1
RSP16-8B	RSP16-8S	M16×1.5	Φ16.2	4	8	9	69	19.5	21	1
RSP20-11B	RSP20-11S	M20×1.5	Φ20.2	6	11	10	82	24	26	1
RSP25-16B	RSP25-16S	M25×1.5	Φ25.2	11	16	12	102	33	36	1

AG series HIGH WATER PROTECTION CABLE GLAND



- High water protection IP68 (1bar / 30min) polyamide cable gland.
- Wide selection, for M8 ~ M50, suitable for Φ2.5mm ~ Φ42 mm cable.
- Super tough and superior heat resistant PA6GF (glass fiber filled PA6) material on cap and connector.
- Safer halogen free, eco-friendly product.

Technical Data
Protection class: IP68 1bar / 30min Operating temperature: -20°C ~ +100°C Compliant with EN50262 Ver. A

AG series

Thicker sealing insert evenly hold a cable by having a larger holding area. Remains durable even after repeated tightening / loosening.

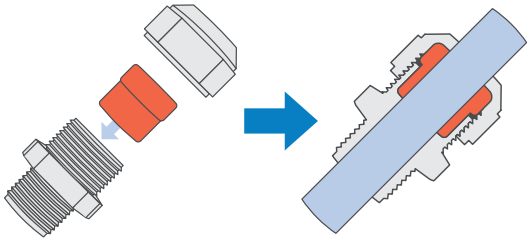

Lamellar insert type

If over-tightened, it can cause the rubber bush or cable to deform, which can allow water to seep in.

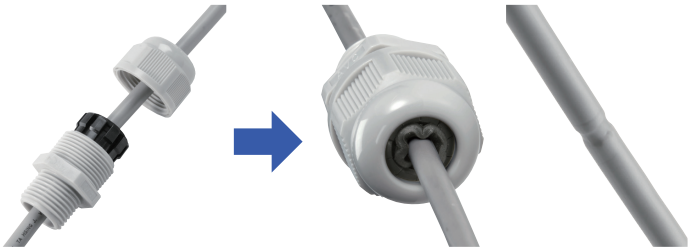

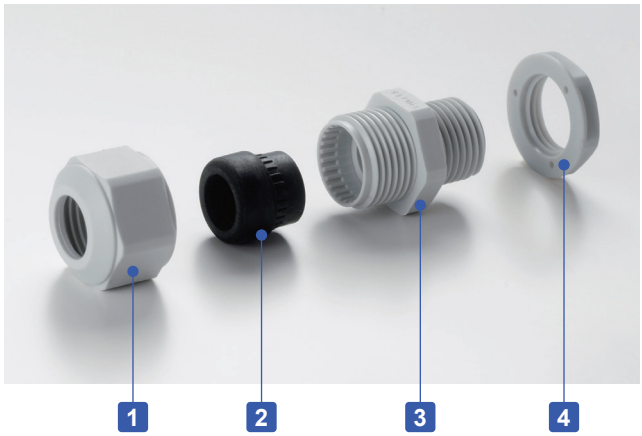

Components

■ PA6GF = Polyamide6 Glass Fiber Filled

No.	Part name	Material
1	Cap	PA6GF
2	Sealing insert	TPE
3	Connector	PA6GF
4	Lock nut	PA6

■ Lock nut is not included for M8 and M10 sizes.
Please drill an appropriate thread hole into the enclosure for installation.

■ Appropriate tightening torque varies by each cable diameter. Tighten the cap until top of the sealing insert forms a small bead between the cap and the cable.



■ No optional sealing washer is required when installing on an even surface because of the built-in waterproof rib.

■ An optional sealing washer is required when installing on an uneven surface. (See website for more information on the optional sealing washer)

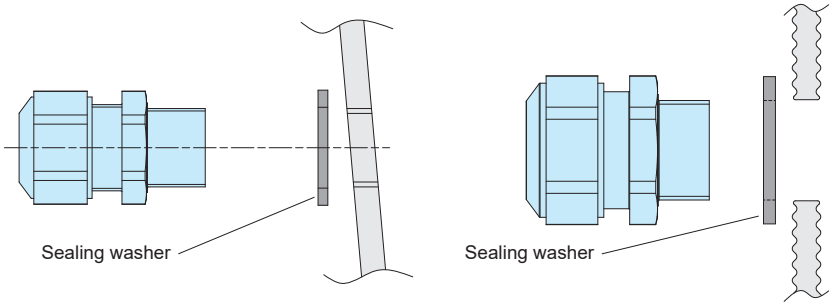



AG dimensions

■ DXF/DWG/PDF drawings available on our website.

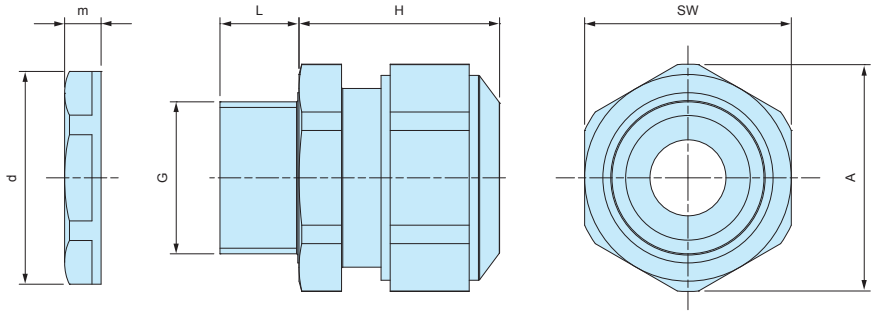

■ Lock nut is not included for M8 and M10 sizes.
Please drill an appropriate thread hole into the enclosure for installation.

Product no. / Details

Product no.		G		Cable range		L	H Max	SW	A	d	m	Pack of
● Black	● Light gray	Thread size	Mounting hole	Min	Max							
AG8-3.5B	AG8-3.5S	M8×1.0	—	2.5	3.5	10	17	12	13.2	—	—	1
AG8-5B	AG8-5S	M8×1.0	—	3.5	4.7	10	17	12	13.2	—	—	1
AG10-6B	AG10-6S	M10×1.0	—	4	6	10	19	15	16.5	—	—	1
AG12-5B	AG12-5S	M12×1.5	Φ12.2	3.5	4.7	12	23.5	17	18.7	18.8	5	1
AG12-6.5B	AG12-6.5S	M12×1.5	Φ12.2	5	6.5	12	23	17	18.7	18.8	5	1
AG12-8B	AG12-8S	M12×1.5	Φ12.2	6.5	7.8	12	23	17	18.7	18.8	5	1
AG16-10B	AG16-10S	M16×1.5	Φ16.2	8	10	12	26	21	23.1	24.3	5	1
AG20-15B	AG20-15S	M20×1.5	Φ20.2	11	15	13	27	27	29.7	29	6	1
AG25-16B	AG25-16S	M25×1.5	Φ25.2	12.5	16	13	34	34	37.4	36	6.7	1
AG25-20B	AG25-20S	M25×1.5	Φ25.2	16	20	13	34	34	37.4	36	6.7	1
AG32-25.5B	AG32-25.5S	M32×1.5	Φ32.3	21	25.5	15	36	41	45.6	46	8	1
AG40-28.5B	AG40-28.5S	M40×1.5	Φ40.3	24	28.5	15	41	50	55.4	53.5	9	1
AG40-33B	AG40-33S	M40×1.5	Φ40.3	28.5	33	15	41	50	55.4	53.5	9	1
AG50-37B	AG50-37S	M50×1.5	Φ50.4	33	37	16	45	60	65.5	66	9.6	1
AG50-42B	AG50-42S	M50×1.5	Φ50.4	37	42	16	45	60	65.5	66	9.6	1