Complementary Silicon Plastic Power Transistors

TIP29, A, B, C (NPN), TIP30, A, B, C (PNP)

Designed for use in general purpose amplifier and switching applications. Compact TO−220 package.

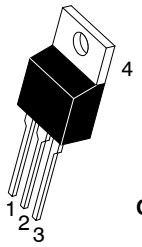

TO−220
CASE 221A
STYLE 1

Features

- These Devices are Pb−Free and are RoHS Compliant*

1 AMPERE
POWER TRANSISTORS
COMPLEMENTARY SILICON
40, 60, 80, 100 VOLTS,
80 WATTS

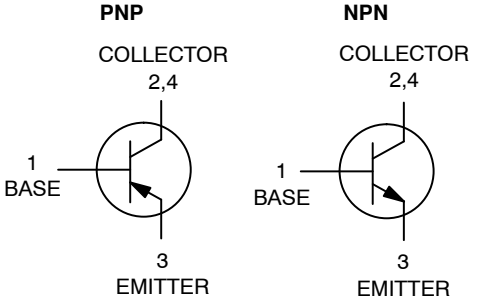

MAXIMUM RATINGS

Symbol	Rating	Value	Unit
V_{CEO}	Collector − Emitter Voltage TIP29G, TIP30G TIP29AG, TIP30AG TIP29BG, TIP30BG TIP29CG, TIP30CG	 40 60 80 100	Vdc
V_{CB}	Collector − Base Voltage TIP29G, TIP30G TIP29AG, TIP30AG TIP29BG, TIP30BG TIP29CG, TIP30CG	 40 60 80 100	Vdc
V_{EB}	Emitter − Base Voltage	5.0	Vdc
I_C	Collector Current − Continuous	1.0	Adc
I_{CM}	Collector Current − Peak	3.0	Adc
I_B	Base Current	0.4	Adc
P_D	Total Power Dissipation @ T_C = 25°C Derate above 25°C	 30 0.24	 W W/°C
P_D	Total Power Dissipation @ T_A = 25°C Derate above 25°C	 2.0 0.016	 W W/°C
E	Unclamped Inductive Load Energy (Note 1)	32	mJ
T_J, T_{stg}	Operating and Storage Junction Temperature Range	−65 to +150	°C

Stresses exceeding those listed in the Maximum Ratings table may damage the device. If any of these limits are exceeded, device functionality should not be assumed, damage may occur and reliability may be affected.

1. This rating based on testing with L_C = 20 mH, R_{BE} = 100 Ω, V_{CC} = 10 V, I_C = 1.8 A, P.R.F = 10 Hz

THERMAL CHARACTERISTICS

Symbol	Characteristic	Max	Unit
$R_{\theta JA}$	Thermal Resistance, Junction−to−Ambient	62.5	°C/W
$R_{\theta JC}$	Thermal Resistance, Junction−to−Case	4.167	°C/W

*For additional information on our Pb−Free strategy and soldering details, please download the **onsemi** Soldering and Mounting Techniques Reference Manual, SOLDERRM/D.

MARKING DIAGRAM

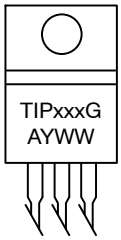

TIPxxx	=	Device Code: 29, 29A, 29B, 29C 30, 30A, 30B, 30C
A	=	Assembly Location
Y	=	Year
WW	=	Work Week
G	=	Pb−Free Package

ORDERING INFORMATION

See detailed ordering and shipping information on page 4 of this data sheet.

© Semiconductor Components Industries, LLC, 2014

ELECTRICAL CHARACTERISTICS (T_C = 25°C unless otherwise noted)

Symbol	Characteristic	Min	Max	Unit
OFF CHARACTERISTICS				
$V_{CEO(sus)}$	Collector−Emitter Sustaining Voltage (I_C = 30 mAdc, I_B = 0) (Note 2)			Vdc
	TIP29G, TIP30G	40	–	
	TIP29AG, TIP30AG	60	–	
	TIP29BG, TIP30BG	80	–	
	TIP29CG, TIP30CG	100	–	
I_{CEO}	Collector Cutoff Current			mAdc
	(V_{CE} = 30 Vdc, I_B = 0)			
	TIP29G, TIP29AG, TIP30G, TIP30AG	–	0.3	
	(V_{CE} = 60 Vdc, I_B = 0)			
	TIP29BG, TIP29CG, TIP30BG, TIP30CG	–	0.3	
I_{CES}	Collector Cutoff Current			μAdc
	(V_{CE} = 40 Vdc, V_{EB} = 0)			
	TIP29G, TIP30G	–	200	
	(V_{CE} = 60 Vdc, V_{EB} = 0)			
	TIP29AG, TIP30AG	–	200	
	(V_{CE} = 80 Vdc, V_{EB} = 0)			
	TIP29BG, TIP30BG	–	200	
	(V_{CE} = 100 Vdc, V_{EB} = 0)			
	TIP29CG, TIP30CG	–	200	
I_{EBO}	Emitter Cutoff Current			mAdc
	(V_{BE} = 5.0 Vdc, I_C = 0)	–	1.0	
ON CHARACTERISTICS (Note 2)				
h_{FE}	DC Current Gain			–
	(I_C = 0.2 Adc, V_{CE} = 4.0 Vdc)	40	–	
	(I_C = 1.0 Adc, V_{CE} = 4.0 Vdc)	15	75	
$V_{CE(sat)}$	Collector−Emitter Saturation Voltage			Vdc
	(I_C = 1.0 Adc, I_B = 125 mAdc)	–	0.7	
$V_{BE(on)}$	Base−Emitter On Voltage			Vdc
	(I_C = 1.0 Adc, V_{CE} = 4.0 Vdc)	–	1.3	
DYNAMIC CHARACTERISTICS				
f_T	Current−Gain − Bandwidth Product (Note 3)			MHz
	(I_C = 200 mAdc, V_{CE} = 10 Vdc, f_{test} = 1.0 MHz)	3.0	–	
h_{fe}	Small−Signal Current Gain			–
	(I_C = 0.2 Adc, V_{CE} = 10 Vdc, f = 1.0 kHz)	20	–	

Product parametric performance is indicated in the Electrical Characteristics for the listed test conditions, unless otherwise noted. Product performance may not be indicated by the Electrical Characteristics if operated under different conditions.

2. Pulse Test: Pulse Width ≤ 300 μs, Duty Cycle ≤ 2.0%
3. $f_T = |h_{fe}| \bullet f_{test}$

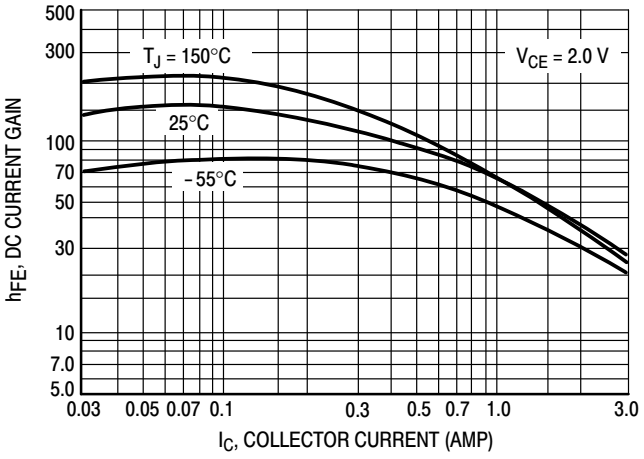

Figure 1. DC Current Gain

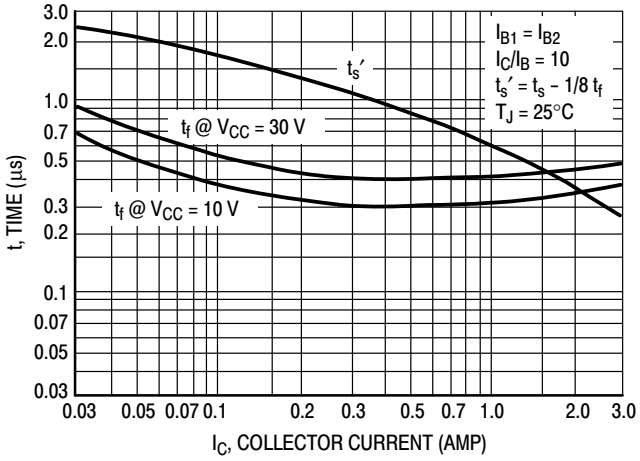

Figure 2. Turn−Off Time

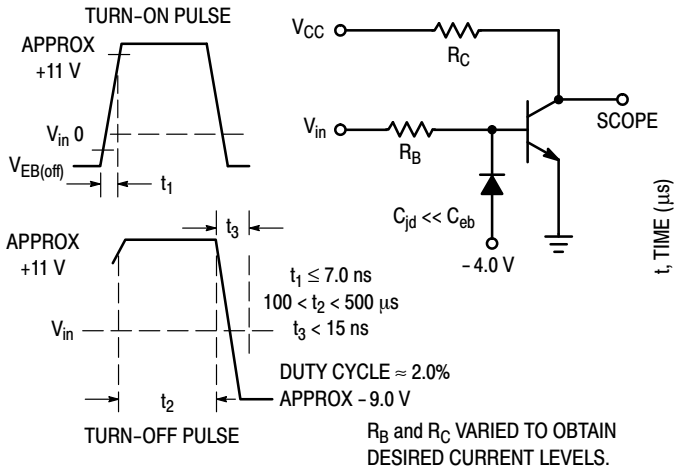

Figure 3. Switching Time Equivalent Circuit

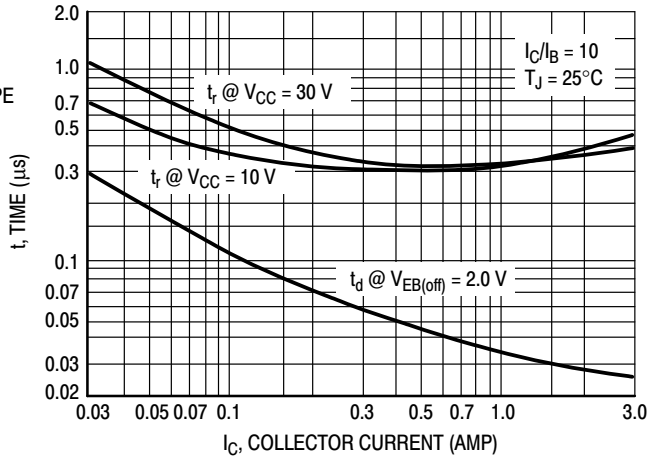

Figure 4. Turn−On Time

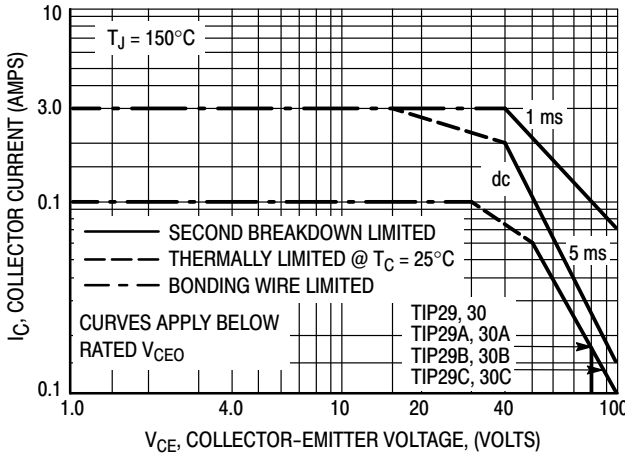

Figure 5. Active Region Safe Operating Area

There are two limitations on the power handling ability of a transistor: average junction temperature and second breakdown. Safe operating area curves indicate $I_C - V_{CE}$ operation; i.e., the transistor must not be subjected to greater dissipation than the curves indicate.

The data of Figure 5 is based on $T_{J(pk)}$ = 150°C; T_C is variable depending on conditions. Second breakdown pulse limits are valid for duty cycles to 10% provided $T_{J(pk)} \le 150°C$. At high case temperatures, thermal limitations will reduce the power that can be handled to values less than the limitations imposed by second breakdown.

ORDERING INFORMATION

Device	Package	Shipping
TIP29G	TO−220 (Pb−Free)	50 Units / Rail
TIP29AG	TO−220 (Pb−Free)	50 Units / Rail
TIP29BG	TO−220 (Pb−Free)	50 Units / Rail
TIP29CG	TO−220 (Pb−Free)	50 Units / Rail
TIP30G	TO−220 (Pb−Free)	50 Units / Rail
TIP30AG	TO−220 (Pb−Free)	50 Units / Rail
TIP30BG	TO−220 (Pb−Free)	50 Units / Rail
TIP30CG	TO−220 (Pb−Free)	50 Units / Rail

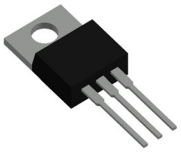

TO−220−3 10.10x15.12x4.45, 2.54P
CASE 221A
ISSUE AL

DATE 05 FEB 2025

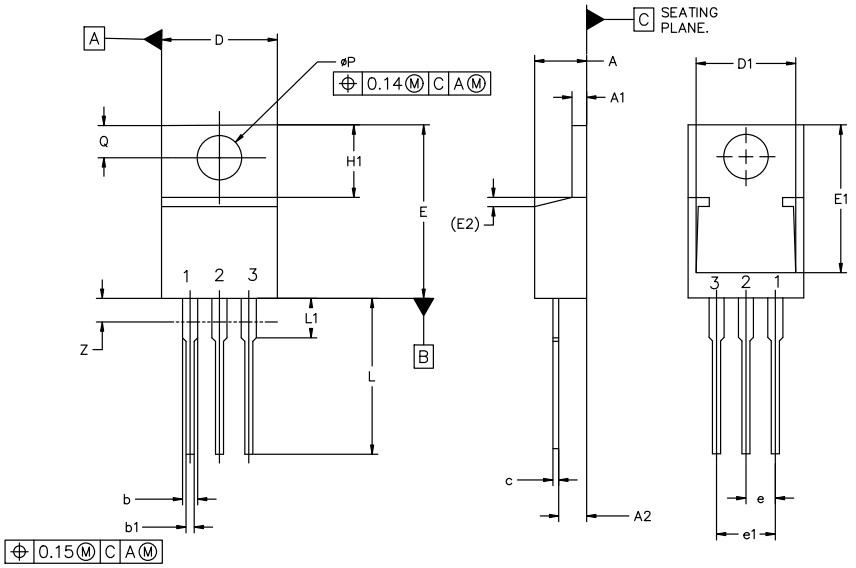

MILLIMETERS			
DIM	MIN	NOM	MAX
A	4.07	4.45	4.83
A1	1.15	1.28	1.41
A2	2.04	2.42	2.79
b	1.15	1.34	1.52
b1	0.64	0.80	0.96
c	0.36	0.49	0.61
D	9.66	10.10	10.53
D1	8.43	8.63	8.83
E	14.48	15.12	15.75
E1	12.58	12.78	12.98
E2	1.27 REF		

MILLIMETERS			
DIM	MIN	NOM	MAX
e	2.42	2.54	2.66
e1	4.83	5.08	5.33
H1	5.97	6.22	6.47
L	12.70	13.49	14.27
L1	2.80	3.45	4.10
Q	2.54	2.79	3.04
øP	3.60	3.85	4.09
Z	−.−−	−.−−	3.48

NOTES:
1. DIMENSIONING AND TOLERANCING PER ASME Y14.5M, 2018.
2. CONTROLLING DIMENSION: MILLIMETERS.
3. DIMENSION Z DEFINES A ZONE WHERE ALL BODY AND LEAD IRREGULARITIES ARE ALLOWED.

STYLE 1:
PIN 1. BASE
2. COLLECTOR
3. EMITTER
4. COLLECTOR

STYLE 2:
PIN 1. BASE
2. EMITTER
3. COLLECTOR
4. EMITTER

STYLE 3:
PIN 1. CATHODE
2. ANODE
3. GATE
4. ANODE

STYLE 4:
PIN 1. MAIN TERMINAL 1
2. MAIN TERMINAL 2
3. GATE
4. MAIN TERMINAL 2

STYLE 5:
PIN 1. GATE
2. DRAIN
3. SOURCE
4. DRAIN

STYLE 6:
PIN 1. ANODE
2. CATHODE
3. ANODE
4. CATHODE

STYLE 7:
PIN 1. CATHODE
2. ANODE
3. CATHODE
4. ANODE

STYLE 8:
PIN 1. CATHODE
2. ANODE
3. EXTERNAL TRIP/DELAY
4. ANODE

STYLE 9:
PIN 1. GATE
2. COLLECTOR
3. EMITTER
4. COLLECTOR

STYLE 10:
PIN 1. GATE
2. SOURCE
3. DRAIN
4. SOURCE

STYLE 11:
PIN 1. DRAIN
2. SOURCE
3. GATE
4. SOURCE

STYLE 12:
PIN 1. MAIN TERMINAL 1
2. MAIN TERMINAL 2
3. GATE
4. NOT CONNECTED

DOCUMENT NUMBER:	**98ASB42148B**	Electronic versions are uncontrolled except when accessed directly from the Document Repository. Printed versions are uncontrolled except when stamped "CONTROLLED COPY" in red.
DESCRIPTION:	**TO−220−3 10.10x15.12x4.45, 2.54P**	**PAGE 1 OF 1**

onsemi and onsemi are trademarks of Semiconductor Components Industries, LLC dba **onsemi** or its subsidiaries in the United States and/or other countries. **onsemi** reserves the right to make changes without further notice to any products herein. **onsemi** makes no warranty, representation or guarantee regarding the suitability of its products for any particular purpose, nor does **onsemi** assume any liability arising out of the application or use of any product or circuit, and specifically disclaims any and all liability, including without limitation special, consequential or incidental damages. **onsemi** does not convey any license under its patent rights nor the rights of others.

onsemi, , and other names, marks, and brands are registered and/or common law trademarks of Semiconductor Components Industries, LLC dba "**onsemi**" or its affiliates and/or subsidiaries in the United States and/or other countries. **onsemi** owns the rights to a number of patents, trademarks, copyrights, trade secrets, and other intellectual property. A listing of **onsemi**'s product/patent coverage may be accessed at www.onsemi.com/site/pdf/Patent−Marking.pdf. **onsemi** reserves the right to make changes at any time to any products or information herein, without notice. The information herein is provided "as−is" and **onsemi** makes no warranty, representation or guarantee regarding the accuracy of the information, product features, availability, functionality, or suitability of its products for any particular purpose, nor does **onsemi** assume any liability arising out of the application or use of any product or circuit, and specifically disclaims any and all liability, including without limitation special, consequential or incidental damages. Buyer is responsible for its products and applications using **onsemi** products, including compliance with all laws, regulations and safety requirements or standards, regardless of any support or applications information provided by **onsemi**. "Typical" parameters which may be provided in **onsemi** data sheets and/or specifications can and do vary in different applications and actual performance may vary over time. All operating parameters, including "Typicals" must be validated for each customer application by customer's technical experts. **onsemi** does not convey any license under any of its intellectual property rights nor the rights of others. **onsemi** products are not designed, intended, or authorized for use as a critical component in life support systems or any FDA Class 3 medical devices or medical devices with a same or similar classification in a foreign jurisdiction or any devices intended for implantation in the human body. Should Buyer purchase or use **onsemi** products for any such unintended or unauthorized application, Buyer shall indemnify and hold **onsemi** and its officers, employees, subsidiaries, affiliates, and distributors harmless against all claims, costs, damages, and expenses, and reasonable attorney fees arising out of, directly or indirectly, any claim of personal injury or death associated with such unintended or unauthorized use, even if such claim alleges that **onsemi** was negligent regarding the design or manufacture of the part. **onsemi** is an Equal Opportunity/Affirmative Action Employer. This literature is subject to all applicable copyright laws and is not for resale in any manner.

ADDITIONAL INFORMATION

TECHNICAL PUBLICATIONS:
Technical Library: www.onsemi.com/design/resources/technical−documentation
onsemi Website: www.onsemi.com

ONLINE SUPPORT: www.onsemi.com/support
For additional information, please contact your local Sales Representative at www.onsemi.com/support/sales