Product data sheet
Characteristics

BMEH586040
redundant HSBY processor module M580 - Level 6 - Remote



Main

Range of product	Modicon M580
Product or component type	Redundant processor module

Complementary

Number of racks	1
Application specific I/O	Counter SSI encoder Serial link HART Accurate time stamping Motion control
Checks	Process control
Control channels	Programmable loops
Integrated connection type	1 Ethernet TCP/IP for service port 2 Ethernet TCP/IP for device network USB type mini B 1 Ethernet for HSBY port
Number of remote I/O station	31 - 2 rack(s) per X80 and Quantum drops
Number of distributed equipment	64
Communication module processor capacity	6 Ethernet communication module 24 AS-Interface module
Communication service	DIO scanner RIO scanner
Memory description	Expandable flash, 4 GB for data storage Integrated RAM, 10 kB for system memory Integrated RAM, 64 MB for program and data Integrated RAM, 4096 kB for HSBY data
Application structure	1 cyclic/periodic master task 1 periodic fast task
Number of instructions per ms	40 Kinst/ms 100 % Boolean 60 Kinst/ms 65 % Boolean + 35 % fixed arithmetic

Disclaimer: This documentation is not intended as a substitute for and is not to be used for determining suitability or reliability of these products for specific user applications

Current consumption	295 mA at 24 V DC
MTBF reliability	600000 H
Marking	CE

Environment

Vibration resistance	3 gn
Shock resistance	30 gn
Ambient air temperature for operation	0…60 °C
Ambient air temperature for storage	-40…85 °C
Operating altitude	0...2000 m 2000...5000 m with derating factor
Relative humidity	5…95 % at 55 °C without condensation
IP degree of protection	IP20
Directives	2014/35/EU - low voltage directive 2014/30/EU - electromagnetic compatibility 2012/19/EU - WEEE directive
Product certifications	CE UL CSA RCM EAC Merchant Navy
Standards	EN 61131-2 EN/IEC 61010-2-201 UL 61010-2-201 CSA C22.2 No 61010-2-201 IACS E10 EN/IEC 61000-6-5, interface type 1 and type 2 EN/IEC 61850-3, location G
Environmental characteristic	Hazardous location class I division 2
Supply	Internal power supply via rack
Status LED	1 LED (green)processor running (RUN): 1 LED (red)processor or system fault (ERR): 1 LED (red)I/O module fault (I/O): 1 LED (green)download in progress (DL): 1 LED (red)memory card or CPU flash fault (BACKUP): 1 LED (green/red)ETH MS (Ethernet port configuration status): 1 LED (green/red)Eth NS (Ethernet network status): 1 LED (green)peer processor running (REMOTE RUN): 1 LED (green)processor ID set to A (A): 1 LED (green)processor ID set to B (B): 1 LED (green)processor acting as Primary (PRIM): 1 LED (green)processor acting as Standby (STBY): 1 LED (green)I/O values overrided by user (FORCED IO): 1 LED (green)Hot standby link status (Hsby Diag):
Net weight	0.849 kg

Packing Units

Unit Type of Package 1	PCE
Number of Units in Package 1	1
Package 1 Weight	900 g
Package 1 Height	9 cm
Package 1 width	17.5 cm
Package 1 Length	25 cm
Unit Type of Package 2	S03
Number of Units in Package 2	6
Package 2 Weight	5.4 kg
Package 2 Height	30 cm
Package 2 width	30 cm
Package 2 Length	40 cm

Offer Sustainability

Sustainable offer status	Green Premium product
EU RoHS Directive	Pro-active compliance (Product out of EU RoHS legal scope) EU RoHS Declaration
Mercury free	Yes
RoHS exemption information	Yes
China RoHS Regulation	China RoHS declaration
Circularity Profile	End of Life Information
WEEE	The product must be disposed on European Union markets following specific waste collection and never end up in rubbish bins

BMEH586040

CPU Module Only

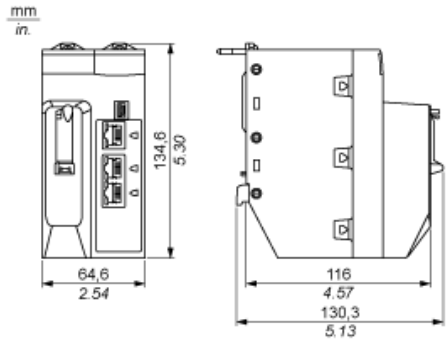

Modules Mounted on Racks

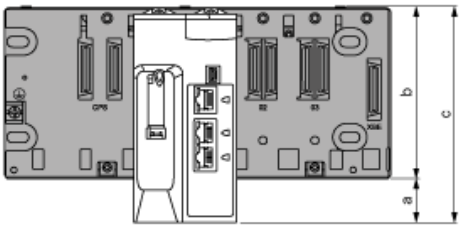

a: additional space below the rack to accommodate the height of the CPU. For an X Bus rack, the value is 30.9 mm (1.217 in.); for an Ethernet rack, th
b: the height of the rack. For an X Bus rack, the height is 103.7 mm (4.083 in.); for an Ethernet rack, the height is 105.11 mm (4.138 in.).
c: the height of the main local rack, 134.6 mm (5.299 in.)

Modules and Cables Mounted in an Enclosure

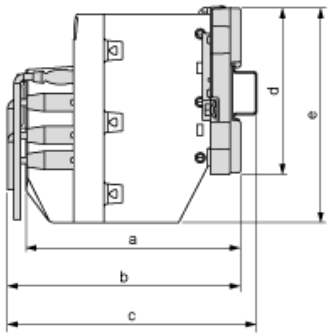

a: enclosure depth: 135 mm (5.315 in.)
b: wiring + module depth: > 146 mm (5.748 in.)
c: wiring + module + DIN rail depth: > 156 mm (6.142 in.)
d: rack height: for an X Bus rack 103.7 mm (4.083 in.); for an Ethernet rack, 105.11 mm (4.138 in.)
e: module height: 134.6 mm (5.299 in.)