RPMAG

Electromagnetic flowmeter

Flow measurement for conductive and chemically aggressive liquids

Dn from 10 to 2000 mm

Measurement accuracy: ± 0.2%; ± 0.5%

Neoprene / PTFE coatings

Power supply 85÷265Vac; 11÷14Vdc; 20÷30Vdc/Vac

Datalogger on USB pendrive

Removable O-LED display module

Remote control via Smartphone

RPmag flowmeter is suitable for all of applications into “industrial process”. Various materials for lining are available as well as electrodes made of tantalum, hastelloy c, titanium. Most common communication systems such as Modbus, and by means of an app for Android smartphone via Bluetooth. RPMAG has an integrated data logger for the recording of the measurements over time. It consist in an USB pen drive which is inserted behind the removable O-LED display VL701. The recorded data could be stored into a TXT file which is compatible with Excel or other equivalent analisys software packages.

Technical Feature

Flow rate range
Bidirectional on fluids with speeds up to 10m / s
Range dimension / lining material
PTFE DN10 ÷ DN500 / RUBBER DN65 ÷ DN2000
Sensor pipe material
SS321
Housing material
epoxy painted aluminium
Electrodes material
SS316L - Hastelloy C - Titanium - Tantalum - Platinum
Measure range
<0,1m3/h ÷ >110000m3/h
Accuracy
±0,5% standard; ±0,2% optional
Repeatability
±0,1%
Fluid conductivity
>5µS/cm.

Power supply
85÷265Vac; 11÷14Vdc; 20÷30Vdc/Vac
Consumption
6W, max. 8W.
Communication protocol
Modbus; Bluetooth App Android (opt.);
Operating temperature Limits
Remote version
RUBBER -10 ÷ +80°C; PTFE -40 ÷ +150°C
Compact version
RUBBER -10 ÷ +80°C; PTFE -40 ÷ +100°C
Storage temperature: -40÷85°C
Data Logger
Internal data logger to USB pen drive
Output
4 ÷ 20mA; Frequency; Impulsive; 2 relays
Input signals
2 active analog inputs
1 digital input.

Reverse Flow
Allows measure and totalization of reverse flow.
Low Flow Cutoff
Adjustable. Below selected value, instantaneous flow and outputs are driven to the zero flow rate signal level.
Humidity Limits
0-100% RH to 150 °F (65 °C), not condensing.
Damping
Adjustable between 1 and 99 seconds.
Compact version IP rating
IP67
Remote version IP rating
sensor IP67 / IP68 (by request) - converter IP67
Anti-condensation filter
Anti-condensation filter installed on converter

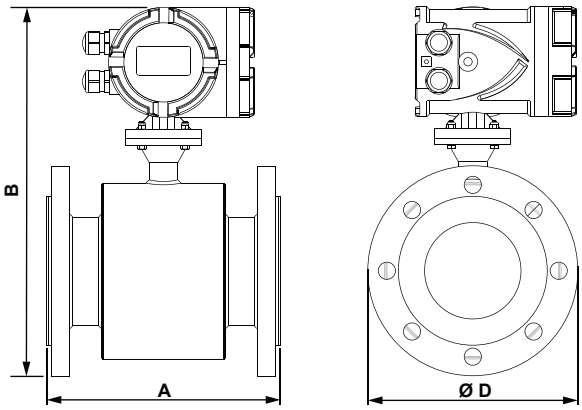

DN (mm)	A (mm)	PN 16 - PN 40	
		B (mm)	ØD (mm)
10	200	295	90
15		295	95
20		300	105
25		300	115
32		315	140
40		335	150
50		344	165
65		360	185
80		375	200

DN (mm)	A (mm)	PN 10		PN 16		PN 40	
		B (mm)	ØD (mm)	B (mm)	ØD (mm)	B (mm)	ØD (mm)
100	250	-	-	400	220	410	235
125	250	-	-	420	250	435	270
150	300	-	-	460	285	468	300
200	350	520	340	520	340	538	375
250	450	570	395	575	405	598	450
300	500	620	445	620	460	648	515
350	550	670	505	678	520	708	580
400	600	730	565	738	580	778	660
450	600	780	615	793	640	816	685
500	600	830	670	850	715	870	755
600	600	930	780	960	840	985	890
700	700	1050	895	1080	910	-	-
800	800	1165	1015	1170	1025	-	-
900	900	1270	1115	1275	1125	-	-
1000	1000	1360	1230	1375	1255	-	-

RPMAG Electromagnetic flowmeter

For conductive fluids. With sensor pipe in SS321
External sensor and flanges in carbon steel
Ambient temperature range: -20° ÷ 60°C
Fluid temperature range: -10° ÷ 80°C (with Neoprene lining)
-40° ÷ 150°C (with PTFE lining - max 100° for compact versions)
IP67 electronic housing with anticondensation filter
2 alarm relays (min/max) - 3rd electrode for grounding

	Version	
	B	Remote - acc. 0,2% - Data logger - n.2 4÷20mA input - std cable length 5m (over 5m eur 7,80/m)
	C	Remote - acc. 0,5% - Data logger - n.2 4÷20mA input - std cable length 5m (over 5m eur 7,80/m)
	L	Compact - acc. 0,2% - Data logger - n.2 4÷20mA input
	N	Compact - acc. 0,5% - Data logger - n.2 4÷20mA input
	R	Remote - acc. 0,2% - n.2 4÷20mA input - std cable length 5m (over 5m eur 7,80/m)
	S	Remote - acc. 0,5% - n.2 4÷20mA input - std cable length 5m (over 5m eur 7,80/m)
	T	Compact - acc. 0,2% - n.2 4÷20mA input
	V	Compact - acc. 0,5% - n.2 4÷20mA input
	Z	Special

	DN flange / Max. pressure / Lining	
	0010B2	DN10 / 4.0MPa / PFA - range 0,14 ÷ 2,9m3/h - only 2 electrodes
	0015B2	DN15 / 4.0MPa / PTFE - range 0,3 ÷ 6m3/h
	0020B2	DN20 / 4.0MPa / PTFE - range 0,5 ÷ 12m3/h
	0025B2	DN25 / 4.0MPa / PTFE - range 0,6 ÷ 18m3/h
	0032B2	DN32 / 4.0MPa / PTFE - range 1 ÷ 30m3/h
	0040B2	DN40 / 4.0MPa / PTFE - range 1,8 ÷ 42m3/h
	0050B2	DN50 / 4.0MPa / PTFE - range 3 ÷ 66m3/h
	0065B1	DN65 / 4.0MPa / Neoprene - range 5,8 ÷ 120m3/h
	0065B2	DN65 / 4.0MPa / PTFE - range 5,8 ÷ 120m3/h
	0080B1	DN80 / 4.0MPa / Neoprene - range 8,9 ÷ 180m3/h
	0080B2	DN80 / 4.0MPa / PTFE - range 8,9 ÷ 180m3/h
	0100B1	DN100 / 4.0MPa / Neoprene - range 11 ÷ 282m3/h
	0100B2	DN100 / 4.0MPa / PTFE - range 11 ÷ 282m3/h
	0100E1	DN100 / 1.6MPa / Neoprene - range 11 ÷ 282m3/h
	0100E2	DN100 / 1.6MPa / PTFE - range 11 ÷ 282m3/h
	0125B1	DN125 / 4.0MPa / Neoprene - range 20 ÷ 450m3/h
	0125B2	DN125 / 4.0MPa / PTFE - range 20 ÷ 450m3/h
	0125E1	DN125 / 1.6MPa / Neoprene - range 20 ÷ 450m3/h
	0125E2	DN125 / 1.6MPa / PTFE - range 20 ÷ 450m3/h
	0150B1	DN150 / 4.0MPa / Neoprene - range 30 ÷ 600m3/h
	0150B2	DN150 / 4.0MPa / PTFE - range 30 ÷ 600m3/h
	0150E1	DN150 / 1.6MPa / Neoprene - range 30 ÷ 600m3/h
	0150E2	DN150 / 1.6MPa / PTFE - range 30 ÷ 600m3/h
	0200C1	DN200 / 1.0MPa / Neoprene - range 50 ÷ 1100m3/h
	0200C2	DN200 / 1.0MPa / PTFE - range 50 ÷ 1100m3/h
	0200E1	DN200 / 1.6MPa / Neoprene - range 50 ÷ 1100m3/h
	0200E2	DN200 / 1.6MPa / PTFE - range 50 ÷ 1100m3/h

0250C1	DN250 / 1.0MPa / Neoprene - range 85 ÷ 1700m3/h
0250C2	DN250 / 1.0MPa / PTFE - range 85 ÷ 1700m3/h
0250E1	DN250 / 1.6MPa / Neoprene - range 85 ÷ 1700m3/h
0250E2	DN250 / 1.6MPa / PTFE- range 85 ÷ 1700m3/h
0300C1	DN300 / 1.0MPa / Neoprene - range 110 ÷ 2400m3/h
0300C2	DN300 / 1.0MPa / PTFE - range 110 ÷ 2400m3/h
0300E1	DN300 / 1.6MPa / Neoprene - range 110 ÷ 2400m3/h
0300E2	DN300 / 1.6MPa / PTFE - range 110 ÷ 2400m3/h
0350C1	DN350 / 1.0MPa / Neoprene - range 180 ÷ 3300m3/h
0350C2	DN350 / 1.0MPa / PTFE - range 180 ÷ 3300m3/h
0350E1	DN350 / 1.6MPa / Neoprene - range 180 ÷ 3300m3/h
0350E2	DN350 / 1.6MPa / PTFE - range 180 ÷ 3300m3/h
0400C1	DN400 / 1.0MPa / Neoprene - range 220 ÷ 4200m3/h
0400C2	DN400 / 1.0MPa / PTFE - range 220 ÷ 4200m3/h
0400E1	DN400 / 1.6MPa / Neoprene - range 220 ÷ 4200m3/h
0400E2	DN400 / 1.6MPa / PTFE - range 220 ÷ 4200m3/h
0450C1	DN450 / 1.0MPa / Neoprene - range 270÷ 5400m3/h
0450C2	DN450 / 1.0MPa / PTFE - range 270÷ 5400m3/h
0450E1	DN450 / 1.6MPa / Neoprene - range 270÷ 5400m3/h
0450E2	DN450 / 1.6MPa / PTFE - range 270÷ 5400m3/h
0500C1	DN500 / 1.0MPa / Neoprene - range 320 ÷ 6600m3/h
0500C2	DN500 / 1.0MPa / PTFE - range 320 ÷ 6600m3/h
0500E1	DN500 / 1.6MPa / Neoprene - range 320 ÷ 6600m3/h
0500E2	DN500 / 1.6MPa / PTFE - range 320 ÷ 6600m3/h
0600C1	DN600 / 1.0MPa / Neoprene - range 490 ÷ 9600m3/h
0600E1	DN600 / 1.6MPa / Neoprene - range 490 ÷ 9600m3/h
0700C1	DN700 / 1.0MPa / Neoprene - range 680 ÷ 13500m3/h
0700E1	DN700 / 1.6MPa / Neoprene - range 680 ÷ 13500m3/h
0800C1	DN800 / 1.0MPa / Neoprene - range 900 ÷ 18000m3/h
0800E1	DN800 / 1.6MPa / Neoprene - range 900 ÷ 18000m3/h
0900C1	DN900 / 1.0MPa / Neoprene - range 1200 ÷ 22500m3/h
0900E1	DN900 / 1.6MPa / Neoprene - range 1200 ÷ 22500m3/h
1000C1	DN1000 / 1.0MPa / Neoprene - range 1450 ÷ 28000m3/h
1000E1	DN1000 / 1.6MPa / Neoprene - range 1450 ÷ 28000m3/h
1200D1	DN1200 / 0,6MPa / Neoprene - range 2000 ÷ 40000m3/h
1400D1	DN1400 / 0,6MPa / Neoprene - range 2800 ÷ 55000m3/h
1600D1	DN1600 / 0,6MPa / Neoprene - range 3650 ÷ 65000m3/h
9999Z9	Special

	Process connection	
	B	DIN (UNI 1092-1) flange
	D	ANSI flange (price on request)
	Z	Special

	Electrodes material	
	3	Hastelloy C276 - standard
	4	Titanium
	5	Tantalum
	6	Platinum

	Power supply	
	A	85÷265Vac
	C	20÷30 Vac/Vdc
	D	11÷30Vdc
	Z	Special

	Accessories	
	0	None
	1	316SS or Hastelloy C grounding rings for plastic pipe installation (prices on MA page)
	2	Protective rings against inner lining abrasion (price on request)

	Output	
	B	4÷20mA with galvanic separation + pulse + MODBUS RTU + BLUETOOTH
	E	4÷20mA with galvanic separation + pulse + MODBUS RTU

	Pipe protection degree	
	1	IP67
	2	IP68 (only for remote version)

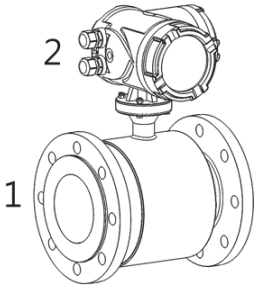

COMPACT VERSION

1. Sensor
2. Converter

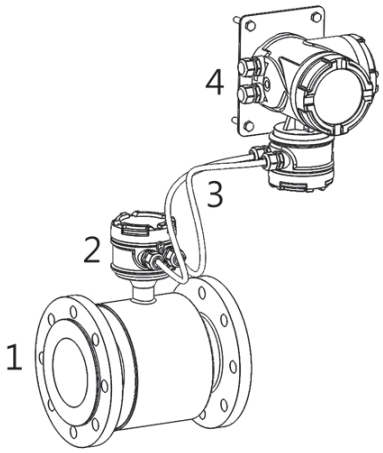

REMOTE VERSION
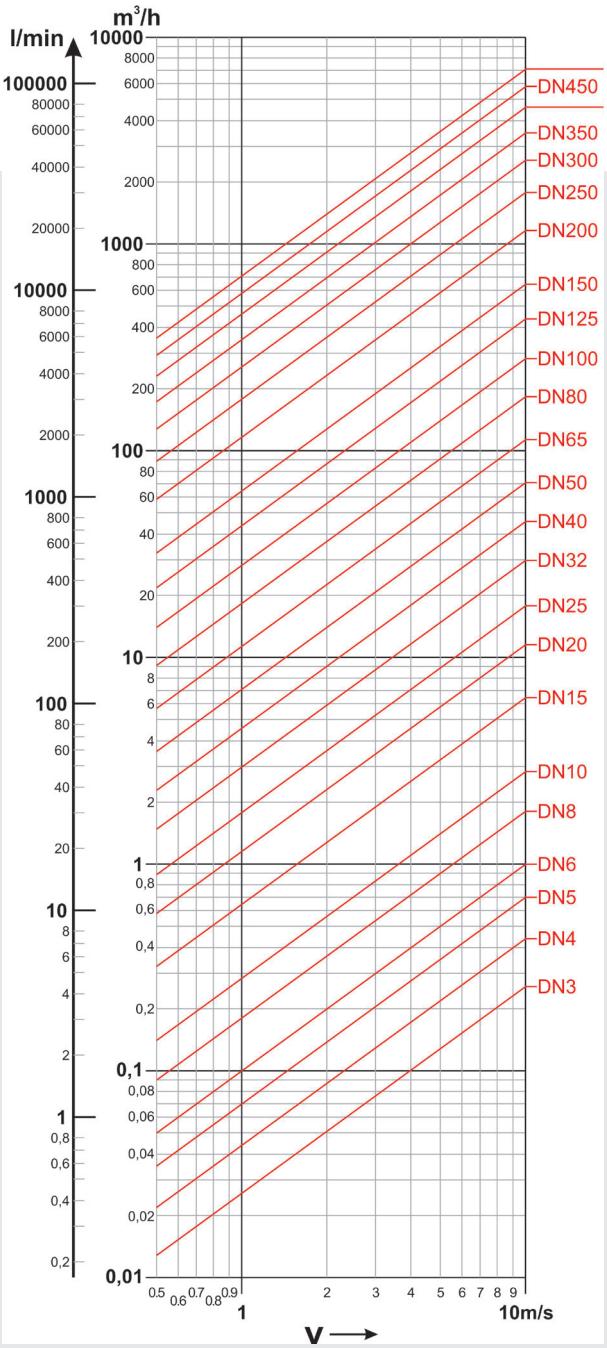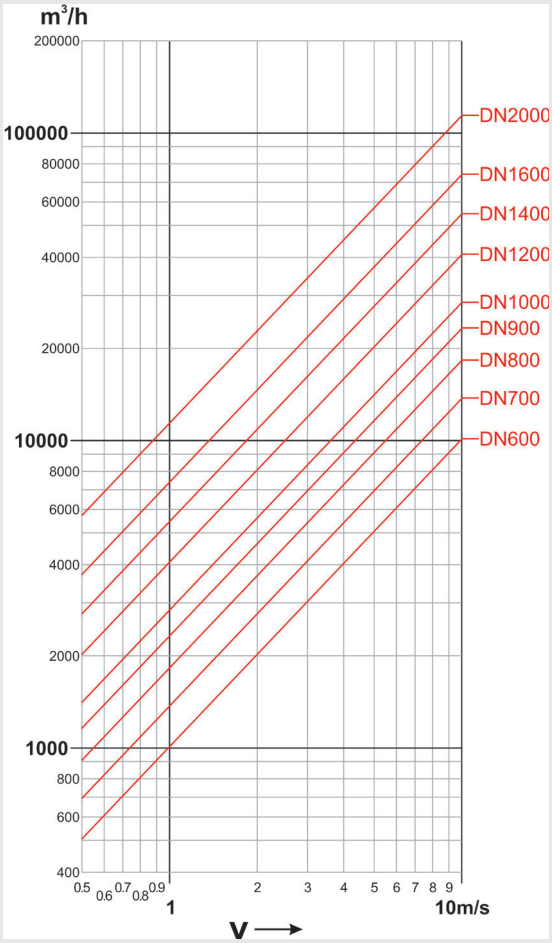
1. Sensor
2. Connection housing
3. Connection cables
4. Converter, wall mounting