Any non-compliance shall obligate the violator to compensate for damages. In case any patent is issued or a utility model is registered, or in case of any other industrial property rights, all such rights must be reserved for us.

BEDIA Motorentechnik GmbH & Co.KG, Altdorf bei Nürnberg

Technical data

Medium	oil
Function	Minimum - operating current (oc)
Operating voltage	12 / 24 V (-25% / +50%) (9 - 36 VDC)
Current consumption	typ. < 8 mA
Output	low side switch ≤ 1 A over the whole temperature range short-circuit and overload protected over the ambient temperature range. At inductive loads freewheeling diode e.g. 1N4007, has to be mounted at the load.
Mounting thread	M18x1,5
Function control	2 seconds ± 5%
Fault indication delay	7 seconds ± 5% ⓐ
Connection	connector according to DIN EN 175 301-803-A
Housing material	X5CrNi18 10 EN 10088-3:1.4301 capacitive connected to ground
Probe coating	Tefzel® ETFE
Probe protection	IP 65 to DIN40050
Weight	approx. 95 g
Marking	manufacturer; type; manufacturer no.; SN; year / week; approvals
Switch point hysteresis	typ. < 3 mm
Reference medium	paraffin oil, ε_r = 2,0..2,4, for switchpoint adjustment
Medium temperature	-40 °C to +150 °C (-40 °F to +302 °F)
Ambient temperature	-40 °C to +125 °C (-40 °F to +257 °F)
Storage temperature	-50 °C to +125 °C (-58 °F to +257 °F)
Mounting position	optional
Reverse polarity protection	inbuilt between positive and negative terminal

Caution !!

Do not connect negative potential to signal terminal of the sensor and positive potential to negative terminal of the sensor.

Approvals	ABS, BV, CCS, DNV, GL, KR, LR, NKK, RINA, RMRS
Customs tariff number	90261029

Environmental simulations

Vibration	ISO 16750-3:2007 10 Hz - 2000 Hz 20 g
Free Fall	IEC 16750
Mechanical Shock	DIN EN 60068-2-27:1995; 100 g / 11ms
Dry Cold	DIN EN 60068-2-1:2006; -40 °C / 24 h (-40 °F / 24 h)
Dry Heat	DIN EN 60068-2-2:2008; +125 °C / 96 h (+257 °F / 96 h)
Temperature cycling	DIN EN 60068-2-14:2000
Damp Heat	DIN EN 60068-2-78:2002
Damp Heat, steady state	DIN EN 60068-2-30:2006
Salt spray	DIN EN 60068-2-52:1996
Flame retardant	DIN 75 200
Pressure resistance	2,5 MPa (25 bar / 362,6 psi) (25°C / 77°F / 1 h)

EMC

Conducted emmission from the power port	CISPR 16	10 kHz - 30 MHz
Electric field radiaded emmissions	CISPR 16	150 kHz - 2 GHz
RF electromagnetic fields	EN 61000-4-3	1 MHz - 2 GHz; 100 V / m
Conducted interference	EN 61000-4-6	150 kHz - 80 MHz; 10 V
Conducted interference	IEC 60533	50 Hz - 10 kHz; 3 V / 0,5 V
ESD	EN 61000-4-2	± 8 kV Contact / Air discharge
Burst	EN 61000-4-4	± 2 kV DC power port / signal lines
Surge	EN 61000-4-5	± 1 kV line <-> ground ± 0,5 kV line <-> line
High voltage	IEC 60092-504	550 V
Power supply variations and interruptions	EN 61000-4-11	Ub +50% / -25%

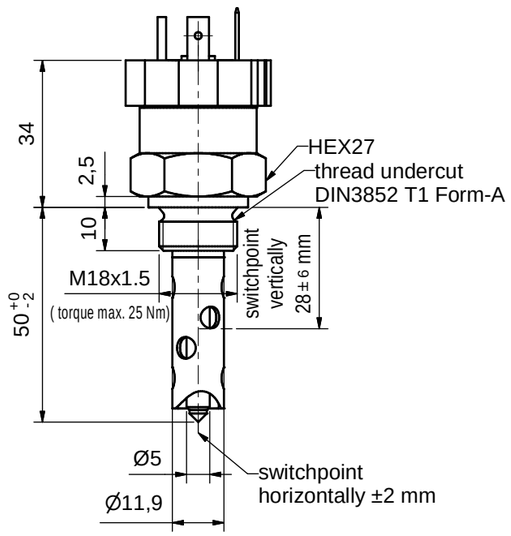

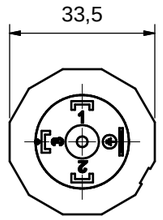

1 = positive (+)
2 = negative (-)
3 = signal (S)

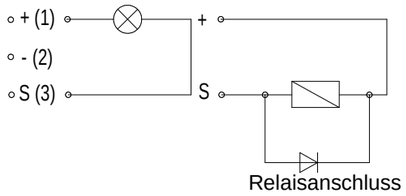

Block diagram

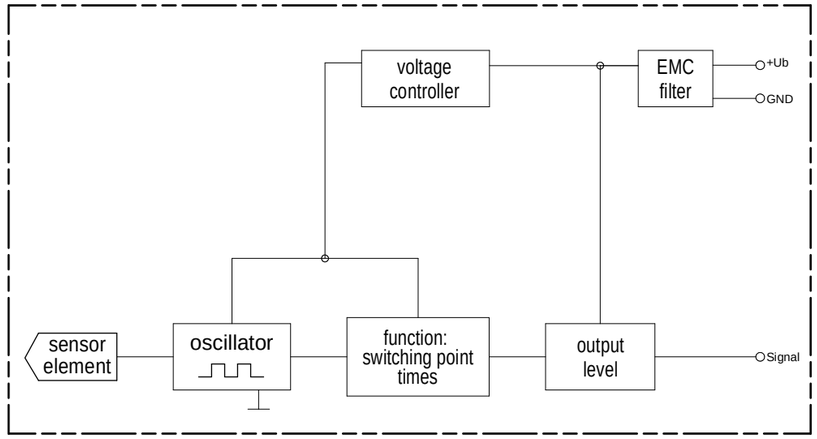

Functional diagram for MINIMUM Probes

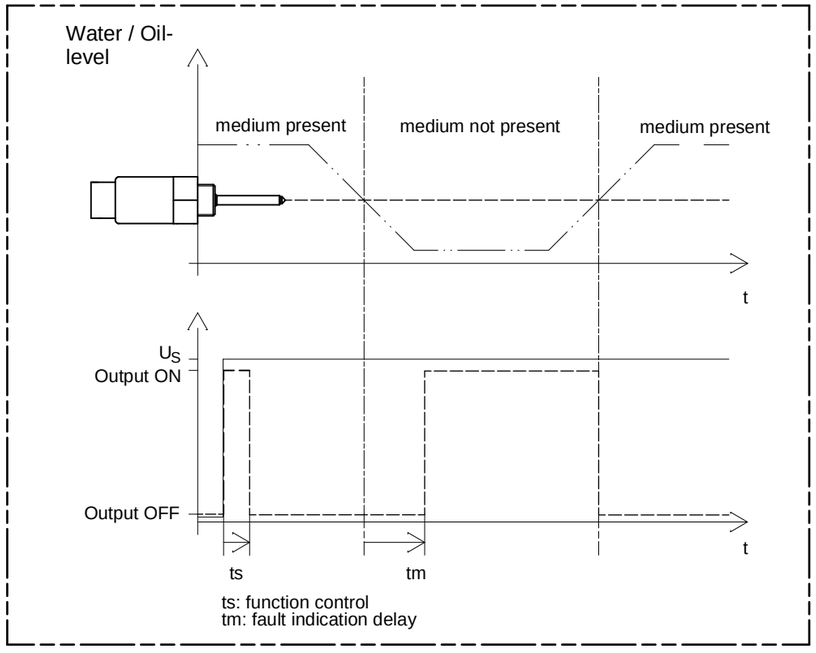

field of application				admissible tolerance	surface	scale 1:1
				ISO2768-vK		position – amount –
					date	name
				created by	19.02.2010	MoeMi
				checked by	19.02.2010	StaRo
a	DIN-No.	28.05.10	SchAl/StaRo			
rev.	modification	date	name/checked by			

description: CLS-50 oil level sensor
low side switch - operating current
with connector according to DIN EN 175 301-803-A

drawing number: 500072 — sheet 1/1

drawing path: I:\CAD\500\500072US.idw

The copyright to this drawing belongs to us. No duplication or transfer to, providing access to or communicating to any third parties is allowed of its contents or excerpts thereof. This drawing may not be used without our approval for any purpose other than that for which it has been entrusted to the recipient.