Germanjet digital to analog (D/A) module is designed for enhancing position signal in severer electrical noise situation. In a hard-wired circuit, external noise is picked up from nearby equipment in use, from electrical transformers, from non-qualified wiring, and even from improper grounding; as a result, it significantly degrades the quality of analog signals and diminishes machine accuracy.

The D/A module is specify use for 183 series start/stop sensor. The sensor outputs the position signal in digital format to the D/A module installed inside the electrical panel. The module and then converts the digital signal to analog volt for the controller (PLC).

The module has an internal 24V power stabilizer to regulate the incoming fluctuated power source. It provides an extremely stable power supply to both sensor and module.

This solution required almost no change of existing analog control system to experience digital performance and the outcome is as good as fieldbus connection.



Specifications

Order Code	1800 951 021
Output	Voltage (0 - 10Vdc)
Input	Start/Stop digital signal (Half Duplex)
Measurement Type	Linear displacement
Programming	Sensor active stroke can be modified
Resolution	16 Bit D/A, 0.0015% (minimum 1µm)
Repeatability	< ±0.001% of full scale (minimum ±2.5µm)
Non-Linearity	< ±0.01% of full scale (minimum ±40µm)
Update Time	0.5 ms up to 1200 mm / 1.0 ms up to 2400 mm
	2.0 ms up to 4800 mm / 5.0 ms up to 7600 mm
Input Voltage	+24Vdc (20.4 - 28.8Vdc)
Input Protection	Polarity protection up to -30Vdc, Over voltage protection up to 36Vdc
Power Consumption	100mA (stroke range dependent)
Dielectric Strength	500Vdc (DC ground to machine ground)
Operation Temp.	0 to 55℃, Humility 90% non-condensing
EMC	Emission EN 68000-6-3, Immunity EN 61000-6-2, EN 61000-4-2/3/4/6
Weight	0.25 Kg

Economical digital solution ...

Wiring

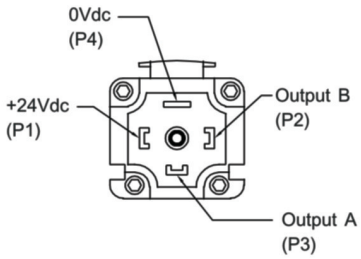

4 pins connector
(View toward sensor pins)

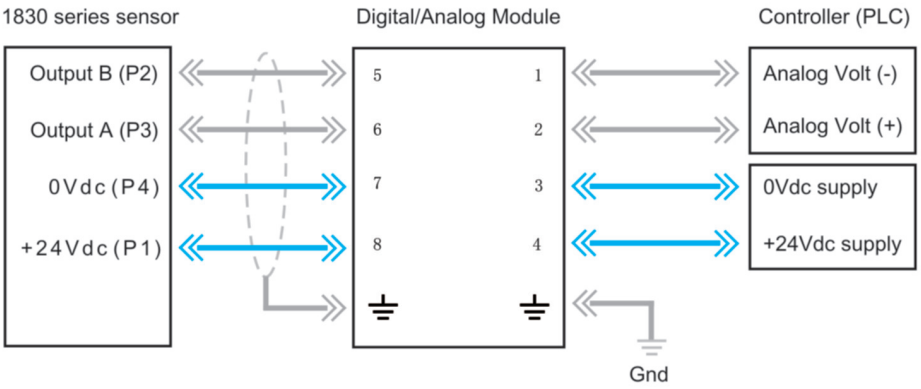

Module Diagnosis

LED	Status
Off	No power supply
On	Normal function
Flash (4 times/sec)	Programming mode (set Null position)
Flash (2 times/sec)	Programming mode (set Span position)
Flash (1 time/sec)	Detect no magnet or wrong wiring

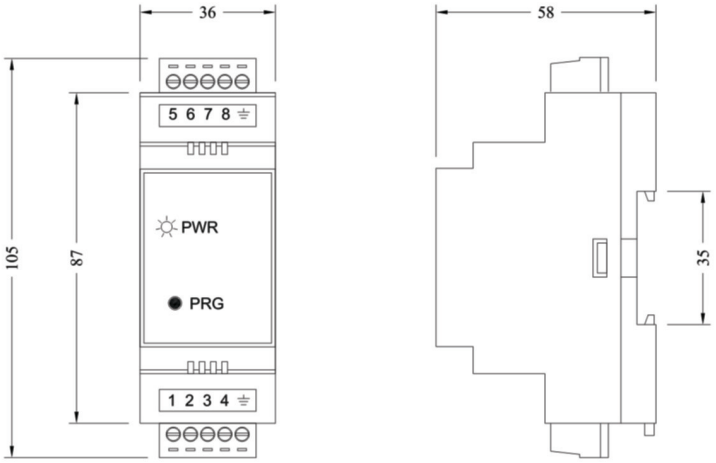

Module programming

This module can modify the sensor active stroke (null and span position) by putting the position magnet to the desired null and span position and pressing the PRG button.

1. Connect sensor to module and module to power supply

2. Activate programming mode:
   - power on module
   - press the PRG button within 5 second after power up
   - LED flash (4 times/sec) indicating programming mode is activiated

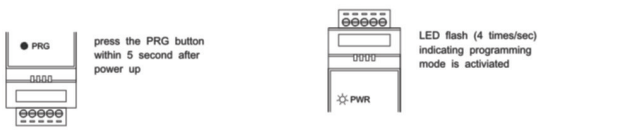

3. Null position (0V) setup:
   - move magnet onto Null position
   - press PRG button, LED flashes slower (2 times/sec)

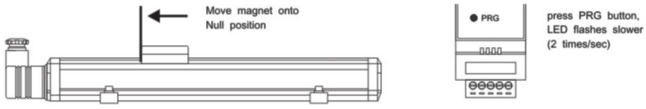

4. Span position (10V) setup:
   - move magnet onto Span position
   - press PRG button

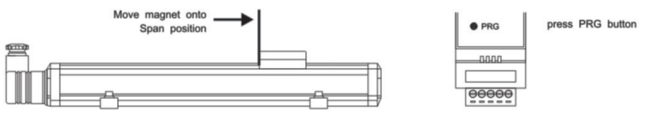

5. Return to normal function mode:
   - switch off module and restart
   - LED stops flashing and ON if magnet is detected; otherwise, slow flashing (1 time/sec) for indicating magnet out of range or sensor wrong wiring