TAE Thermostat

1 Application

TAE .. is an explosion-proof thermostat.
Designed as a two-point controller, and when connected to an electric heater, it can regulate the temperature in a housing to the pre-set, nominal set-point (see installation). The TAE controller switches on when the temperature is below the set point and switches off above the set point.

The TAE can also be used as an alarm. In this version, the TAE AM (Alarmer), switches on when the temperature is above the set point and switches off below the set point.

There is either a thermostat (TAE) or an alarm (TAE..AM) in a housing

2 Features

- Very solid design with aluminium housing.
- Completely encapsulated with silicone.
- Relatively accurate control if the thermostat with thermal feedback is installed on the heater.

3 Control Accuracy

The air temperature in a heated housing is not the same everywhere. Depending on the difference between inside and outside temperature (ΔT), insulation, configuration of the heater and the installed equipment etc., the temperature (e.g. between top and bottom) can fluctuate by 10 K or more.
For exact temperature control of an instrument, a proportional controller with temperature sensor, such as INTERTEC TC D ..., should be used.
If the TAE with thermal feedback is installed on the heater (see Point 8 Installation), it provides control characteristics with derivative (D) control action, maintaining the medium temperature of a mass of approximately 1 kg in the middle of an enclosure at the indicated nominal setpoint.



Housing of TAE … or TAE … AM

4 Explosion Protection

EC Examination Certificate	PTB 03 ATEX 1136 X
IECEx Scheme Certificate	IECEx PTB 07.0054
Marking	II 2G Ex db IIC T6
	II 2D Ex tb IIIC T85°C

5 Technical Data

Protection Degree	IP66/IP68 1bar/30min
Nominal voltage	Max. 300 V
Operating temperature range	-60°C to +180°C
Temperature tolerance	+ / - 3°C
Maximum rated current	10 A
Dimensions	90 x 24 mm
Material	Seawater-proof aluminium, black anodized

6 Types

The figure in the type designation corresponds to the nominal setpoint in °C.

TAE (Temperature Controller)		
Type	Switch on (°C)	Switch off (°C)
TAE -15	-15	-5
TAE -10	-10	0
TAE 10	10	18
TAE 20	20	28
TAE 30	30	38
TAE 40	40	48
TAE 50	50	58
TAE 60	60	68
TAE 70	65	75

TAE AM (Alarmer)		
Type	Switch off (°C)	Switch on (°C)
TAE -15 AM	-15	-5
TAE 5 AM	5	16
TAE 20 AM	20	26
TAE 30 AM	30	40

TAE Thermostat

7 Options

Other designs upon request, e.g.

- With hold-down adapter M20
- CSA US C (NRTL) Explosion Protection for America
- Bi-standard: for worldwide application
- Approvals of other countries upon request

8 Installation

The TAE has one mounting hole.

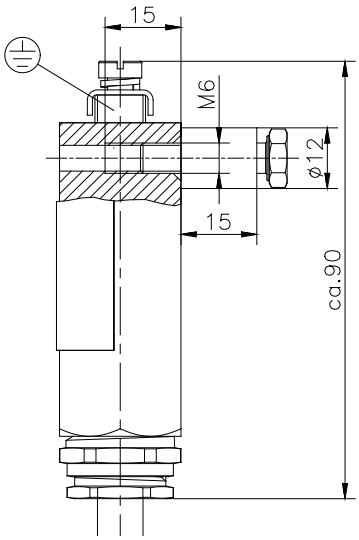

Optionally, the supplied bolt M6x25 or a smaller through-bolt can be used.
For use as a temperature controller the TAE with defined thermal feedback should be installed on the INTERTEC heater.

8.1 Electrical wiring

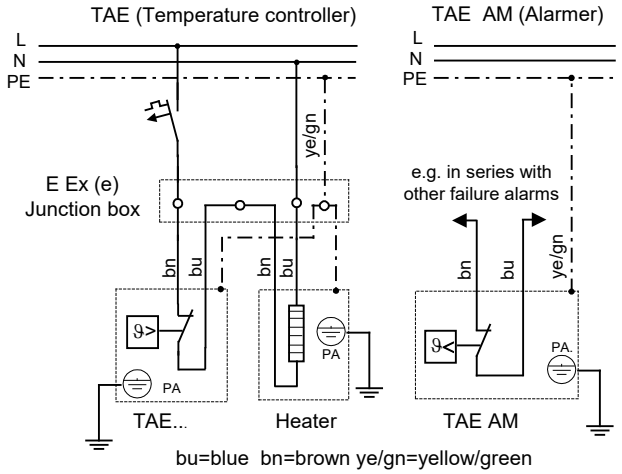

8.2 On MULTITHERM

INTERTEC finned heaters such as MULTITHERM are equipped with slotted mounting rails.

- Slightly loosen the nut / bolt
- Insert head of bolt into one slotted mounting rail of the finned profile. (PTFE distance piece remains outside).
- Carefully tighten by turning the TAE.



8.3 On VARITHERM

There are M6 holes on both sides of the block.

- Turn the threaded rod supplied with the bolt package of the VARITHERM approx. 5 mm into one of these threaded holes.
- Put on the white PTFE spacer.
- Put on the M6 thread of the TAE at the end of the threaded rod and carefully tighten by turning the TAE.

