MECHTEX

Motor Series **MTS4b**



Stepper Motor 15°

Standard Data

Motor type		Permanent Magnet (PM) stepper motor
Electrical Enclosure	IP	40
Connections		Flexible Leads 22 AWG, 200mm length; ends stripped 10 mm
Life expectancy		3 years in continuous operation
Weight	g	200
Mounting		Any position by ears or screw clip

Technical Data

Steps per revolution			24		
Degree/step			15		
Winding Type			bipolar		
Standard Voltage	V	6	12	24	
Resistance per winding	Ω	9.5	61	251	
Winding Type			unipolar		
Standard Voltage	V	6	12	24	
Resistance per winding	Ω	15	61	251	
Winding temperature	°C		105 max.		
Holding torque	Ncm	5.2	(MTSB4b)	4	(MTSU4b)
Axial Force	N		3		
Lateral Force	N		6		
Rotor inertia	gcm²		13		

Dimensional Drawing

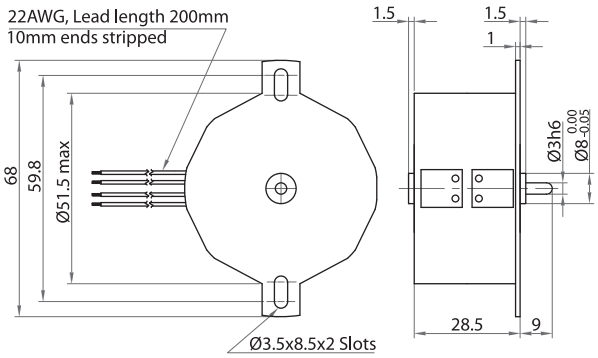

Ordering Data (eg.)

14B C D1 N R

- R — Direction -Reversible
- N — Mounting -with snap clip
- D1 — Voltage -24V DC
- C — Approval - Standard
- 14B — Motor -MTSU4b (unipolar)

Torque Graphs

Start range (pull-in) with constant voltage power stage

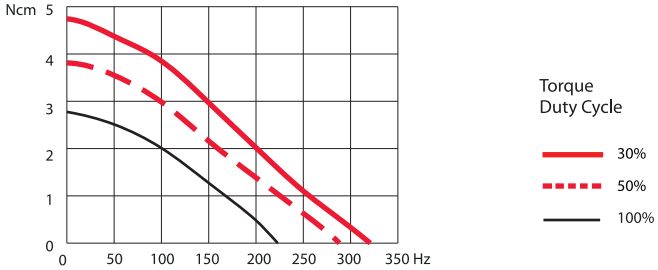

Start range (pull-in) with constant voltage power stage

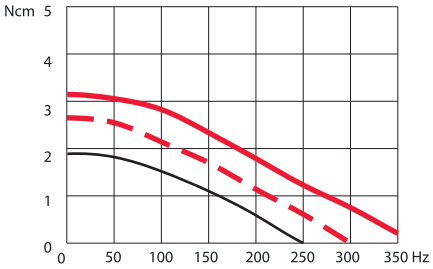

2-Phase stepper Motor MTSB4b

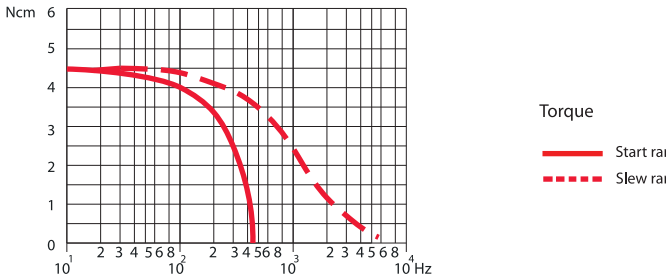

4-Phase Stepper Motor MTSU4b

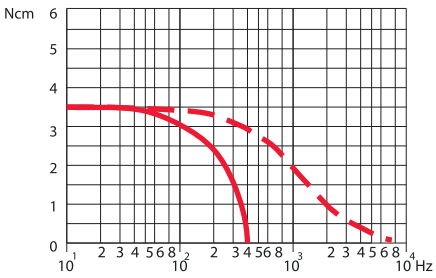

Slew range (pull-out) and start range (pull-in) with constant current power stage (chopper Drive)

Slew range (pull-out) and start range (pull-in) with constant current power stage (chopper Drive)