ORDERING CODE

New

Model Number R5. .. - . . . - . . - .. - ... - A 1 -

omit for version without VV01 & without P2

Series
R5V = Pressure Relief Valve
R5U = Pressure Unloading Valve
R5S = Sequence Valve

Size
06 = 3/4"
08 = 1"
10 = 1 1/4"
12 = 1 1/2" (R5V, R5U only)

Max. pressure
3 = 210 bar – SAE 61 flange (R5V/R5U12)
4 = 280 bar – SAE 61 flange (R5.10)
5 = 350 bar – SAE 61 flange (R5.06/08)
6 = 420 bar – SAE 62 flange (R5V12 only)

Body
Ports X1, Y1[1], M
3 = SAE-4 (7/16"–20 UNF)
9 = G 1/4"

[1] Port Y1 is only available at external drain from the pilot head

Pressure setting range
1 = 7...105 bar (R5U: Pressure differential 20%)
3 = 7...210 bar (R5U: Pressure differential 20%)
5 = 7...350 bar (R5U: Pressure differential 15%)
6 = 7...420 bar (R5V12 only)

Type of control
1 = Hand knob 32 mm dia.
2 = Hand knob 50 mm dia. (not for version with vent valve VV01 or P2)
3 = Acorn nut with lead seal
4 = Adjusting device with key lock (key order no. 700-70619)

Pilot connection
2 = Internal PD – internal PP (R5V)
4 = External PD – external PP* (R5U)
5 = Internal PD – external PP* (R5U)
6 = External PD – internal PP (R5V, R5S)
* External pilot pressure connection on flange face

3-way vent valve VV01
09 = with manual override } Solenoid de-energized: open to tank
10 = without manual override } Solenoid energized: vent line blocked
11 = with manual override } Solenoid de-energized: vent line blocked
12 = without manual override } Solenoid energized: open to tank

P2 = Electric proportional pressure control (12 V DC only, R5V only)

Solenoid voltage and current
W01 = 115 V / 60 Hz, W02 = 230 V / 60 Hz, W06 = 115 V / 50 Hz, W07 = 230 V / 50 Hz — AC
[1] G0R = 12 V, G0Q = 24 V, G0H = 48 V — DC
[1] R5V....P2 = 12 V DC only

Design letter

Seal class
1 = Standard (for special fluids consult DENISON)

Modifications

3

Weight: 5.2 kg

New

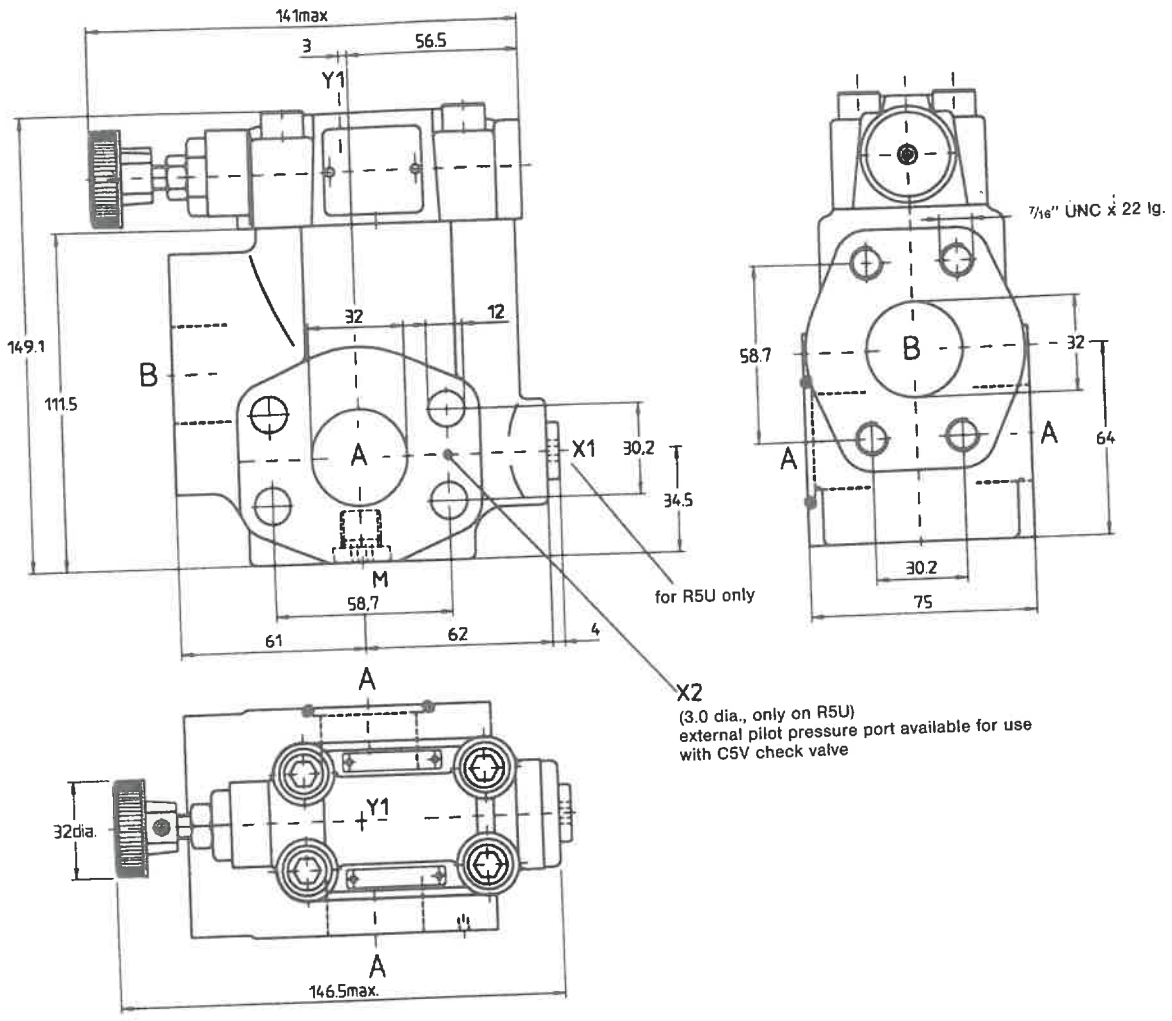

Ports	Function	Port sizes	R5V	R5U	R5S
A (2x)	Pressure	1¼" (SAE-61)	●	●	●
B	Tank [2]	1¼" (SAE-61)	●	●	●
X1	ext. pilot port [1]	G ¼" or SAE-4		●	
Y1	ext. drain	G ¼" or SAE-4	●	●	●
M	Pressure gauge	G ¼" or SAE-4	●	●	●

[1] closed when supplied
[2] secondary port on R5S

Note:
R5*10 pressure controls are mounted directly on the "D" cartridge of DENISON vane pumps.

Ordering Code

Old

Model Number R5. .. – . . . – . . – .. – ... – A 1 –

omit for version without VV01 & without P1

Series
R5V = Pressure Relief Valve
R5V...P1 = Proportional Pressure Relief Valve
R5U = Pressure Unloading Valve
R5S = Sequence Valve

Size
06 = ¾"
08 = 1"
10 = 1¼"
12 = 1½" (R5U, R5V only)

Max. pressure
3 = 210 bar – SAE 61 flange (R5*12)
4 = 280 bar – SAE 61 flange (R5*10)
5 = 350 bar – SAE 61 flange (R5*06/08)
6 = 420 bar – SAE 62 flange (R5V12 only)

Body mounting
1 = 3 Port Flange body ¼" NPTF pilot connection
9 = 3 Port Flange body ¼" B.S.P.P. pilot connection

Pressure setting range
1 = 7...105 bar
3 = 7...210 bar
5 = 7...350 bar
6 = 7...420 bar (R5V12 only)

Type of control
1 = Hand knob 32 mm dia.
2 = Hand knob 50 mm dia. (not for version with vent valve VV01 and P1)
3 = Acorn nut with lead seal
4 = Adjusting device with key lock, key order no. 700–70619

Pilot connection
2 = Internal PD (R5V)
4 = External PD – external PP* (R5U)
5 = Internal PD – external PP* (R5U)
6 = External PD – internal PP (R5V, R5S)
*External pilot pressure connection on flange face

3-way vent valve VV01
09 = with manual override } Solenoid de-energized open to tank
10 = without manual override } Solenoid energized: vent line blocked
11 = with manual override } Solenoid de-energized: vent line blocked
12 = without manual override } Solenoid energized: open to tank

Electric proportional pressure control (24 V DC only, R5V only)
P1 = Solenoid de-energized: open to tank. Solenoid energized: valve in function

Solenoid voltage and current
W01 = 115 V / 60 CY } AC
W02 = 230 V / 60 CY } AC
W06 = 115 V / 50 CY } AC
W07 = 230 V / 50 CY } AC
GOR = 12 V } DC
[1]) GOQ = 24 V } DC
GOH = 48 V } DC
[1]) R5V...P1 = 24 V DC only

Design letter

Seal class
1 = Standard (for special fluids consult Denison)

Modifications

R5V10 – R5U10 – R5S10 (1¼")

Weight: 5.2 kg

Pressure Controls R5*10 are directly mounted at cartridge "D" of Denison vane type units.

Old

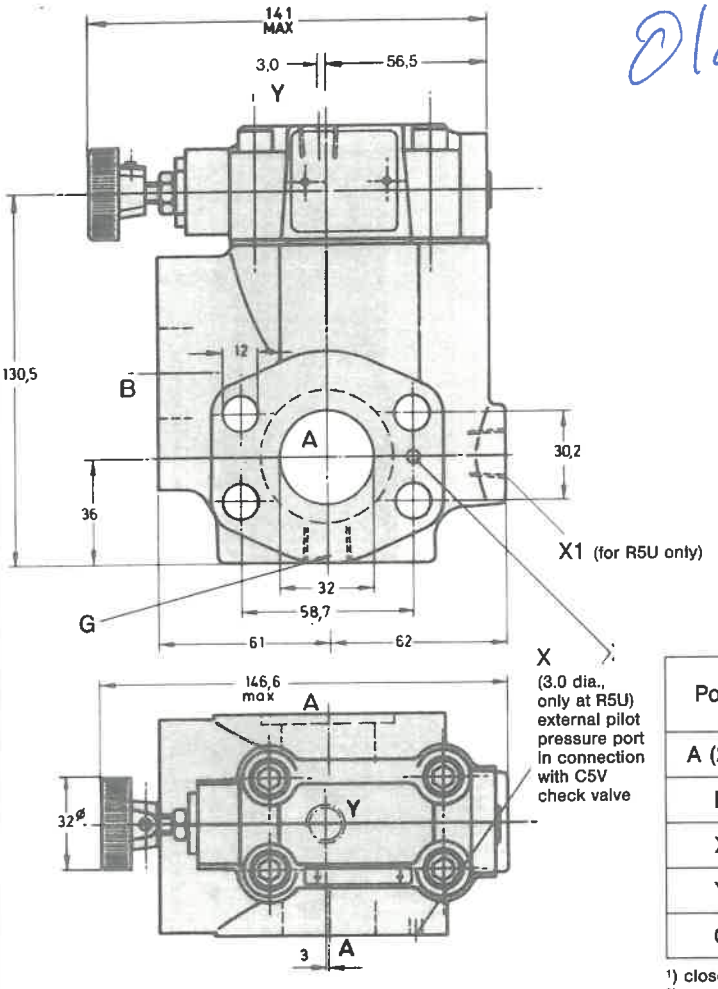

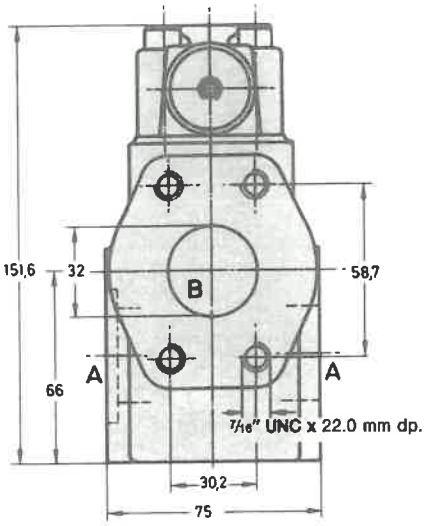

Ports	Function	Port sizes	R5V	R5U	R5S
A (2 x)	Pressure	1¼" SAE 61	●	●	●
B	Tank		●	●	●2)
X1	external pilot port	¼" BSPP or ¼" NPTF		●1)	●
Y3)	external drain		●	●	●
G	Pressure Gauge		●	●	●

1) closed when supplied
2) secondary port at R5S
3) IMPORTANT: this port must be specified, see model code for details

Symbols

Pressure Relief Valve R5V		Pressure Unloading Valve R5U		Sequence Valve R5S
Internal Drain	External Drain	Internal Drain	External Drain	External Drain
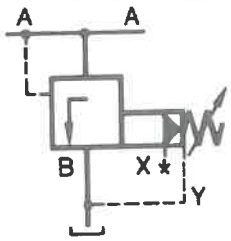	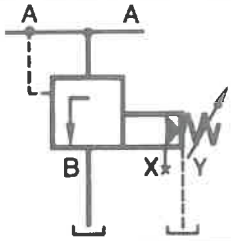	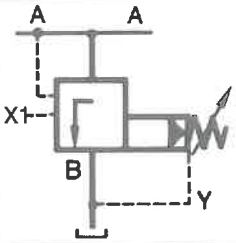	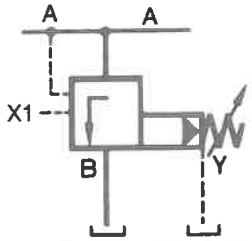	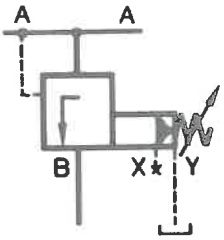

1¼" SAE-Flanges 210 bar

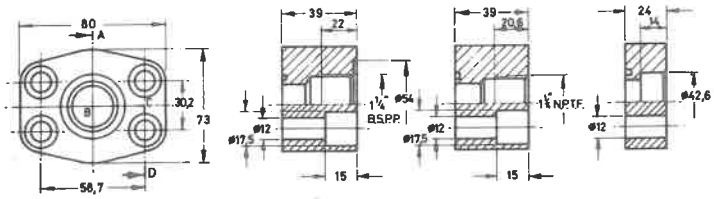

Port sizes	Flange (A) (without screws) * Order no.	Flange (B) (with screws) Order no.
1¼" B.S.P.P.	S16-86535	S14-66935
1¼" NPTF	S16-86536	S14-66927
1¼" socket weld	S16-86534	S14-66943

*see page 10 for screws