Pressure Independent Valve, 2-way, Internal thread, (EPIV

LRB(X))

- Nominal voltage AC/DC 24 V
- Control Modulating, Communicative, Hybrid
- For closed chilled and hot water systems
- For modulating control of air-handling and heating systems on the water side
- Communication via BACnet MS/TP, Modbus RTU, Belimo-MP-Bus or conventional control
- Conversion of active sensor signals and switching contacts

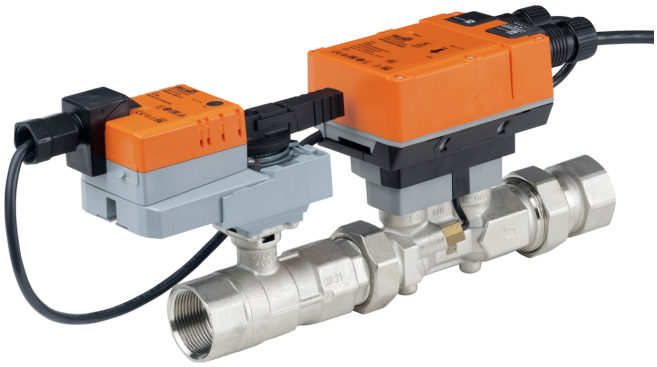

5-year warranty

BACnet Modbus MP-BUS NFC

Technical data

Electrical data	Nominal voltage	AC/DC 24 V
	Nominal voltage frequency	50/60 Hz
	Nominal voltage range	AC 19.2...28.8 V / DC 21.6...28.8 V
	Power consumption in operation	3.5 W
	Power consumption in rest position	1.3 W
	Transformer sizing	6 VA
	Connection supply/control	cable 3 ft. [1 m], 6 x 0.75 mm²
	Conductors, cables	AC/DC 24 V, cable length <100 m
Data bus communication	Communicative control	BACnet MS/TP Modbus RTU MP-Bus
Functional data	Valve size [mm]	0.5" [20]
	Operating range Y	2...10 V
	Operating range Y note	4...20 mA w/ ZG-R01 (500 Ω, 1/4 W resistor)
	Input impedance	100 kΩ (0.1 mA), 500 Ω
	Operating range Y variable	0.5...10 V
	Operating modes optional	VDC variable
	Position feedback U	2...10 V
	Position feedback U note	Max. 1 mA
	Running Time (Motor)	90 s
	Noise level Motor	35 dB(A)
	V'max adjustable	25...100% of V'nom
	Control accuracy	±5% (of 25...100% V'nom)
	Min. controllable flow	1% of V'nom
	Configuration	via NFC, Belimo Assistant 2
	Fluid	Chilled or hot water, up to 60% glycol max (open loop/steam not allowed)
	Fluid temperature	14...250°F [-10...120°C]
	Close-off pressure Δps	200 psi
	Differential Pressure Range	5...50 psi or 1...50 psi see flow reductions chart in tech doc
	Flow characteristic	equal percentage or linear

Technical data

Functional data	Body Pressure Rating	360 psi
	Leakage rate	0% leakage
	GPM	6.6
	Pipe connection	Internal thread NPT (female)
	Installation orientation	upright to horizontal (in relation to the stem)
	Servicing	maintenance-free
	Manual override	external push button
	Inlet Length to Meet Specified Measurement Accuracy	≥ to 0 x DN (according to EN1434-4:2022)
Measuring data	Measured values	Flow
	Temperature sensor	Pt1000 - EN 60751, 2-wire technology, inseparably connected integrated in flow sensor
Temperature measurement	Measuring accuracy absolute temperature	32.6°F @ 50°F [± 0.35°C @ 10°C] (Pt1000 EN60751 Class B) 33°F @ 140°F [± 0.6°C @ 60°C] (Pt1000 EN60751 Class B)
Flow measurement	Measuring principle	Ultrasonic volumetric flow measurement
	Measuring accuracy flow	±2%
	Min. flow measurement	0.5% of V'nom
	Measurement repeatability	±0.5% (Flow)
	Sensor technology	Ultrasonic with glycol and temperature compensation
Safety data	Degree of protection IEC/EN	IP54
	Degree of protection NEMA/UL	NEMA 2
	Housing	UL Enclosure Type 2
	Pressure equipment directive	CE according to 2014/68/EU
	Quality Standard	ISO 9001
	UL 2043 Compliant	Suitable for use in air plenums per Section 300.22(C) of the NEC and Section 602 of the IMC
	Rated impulse voltage supply / control	0.8 kV
	Ambient humidity	Max. 100% RH
	Ambient temperature	-22...122°F [-30...50°C]
	Storage temperature	-40...176°F [-40...80°C]
Materials	Valve body	Nickel-plated brass body
	Flow measuring pipe	Nickel-plated brass body
	Valve plug	Stainless steel
	Stem	stainless steel
	Stem seal	EPDM (lubricated)
	Seat	PTFE
	Characterized disc	TEFZEL®
	O-ring	EPDM
	Ball	stainless steel

Safety notes

- This device has been designed for use in stationary heating, ventilation and air-conditioning systems and must not be used outside the specified field of application, especially in aircraft or in any other airborne means of transport.
- Outdoor application: only possible in case that no (sea) water, snow, ice, insolation or aggressive gases interfere directly with the actuator and that is ensured that the ambient conditions remain at any time within the thresholds according to the data sheet.
- Only authorized specialists may carry out installation. All applicable legal or institutional installation regulations must be complied with during installation.
- The device contains electrical and electronic components and must not be disposed of as household refuse. All locally valid regulations and requirements must be observed.

Product features

Operating mode

The HVAC performance device is comprised of three components: characterized control valve (CCV), measuring pipe with flow sensor and the actuator itself. The adjusted maximum flow (V'max) is assigned to the maximum control signal (typically 100%). The HVAC performance device can be controlled via communicative signals. The fluid is detected by the sensor in the measuring pipe and is applied as the flow value. The measured value is balanced with the setpoint. The actuator corrects the deviation by changing the valve position. The angle of rotation α varies according to the differential pressure through the control element (see flow curves).

Flow measurement

All flow tolerances are at 68°F [20°C] & water.

Flow rate curves

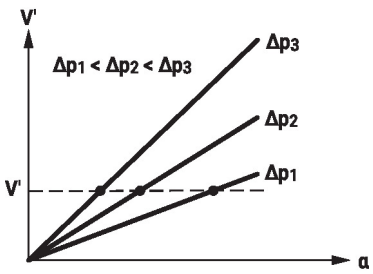

Control characteristics

The fluid velocity is measured in the measuring component (sensor electronics) and converted to a flow rate signal.

The control signal Y corresponds to the power Q via the exchanger, the volumetric flow is regulated in the EPIV. The control signal Y is converted into a linear characteristic curve and provided with the V'max value as the new reference variable w. The momentary control deviation forms the control signal Y1 for the actuator.

The specially configured control parameters in connection with the precise flow rate sensor ensure a stable quality of control. They are however not suitable for rapid control processes, i.e. for domestic water control. U5 displays the measured flow as voltage (factory setting).

Parametrizing V'max with ZTH:

U5 refers to the respective V'nom, i.e. if V'max is e.g. 50% of V'nom, then Y = 10 V, U5 = 5 V.

Parametrizing V'max with PC-Tool:

In the PC-Tool, the maximum flow rate to which U5 refers can be set individually. If V'max is changed (e.g. to 70% V'nom), the U5 flow range is also automatically changed to the same value (e.g. 70% V'nom: U5 = 10 V). This adjustment can be reversed by entering a value manually (U5 flow range = 100%: U5 refers to V'nom).

As an alternative, U5 can be used for displaying the valve opening angle.

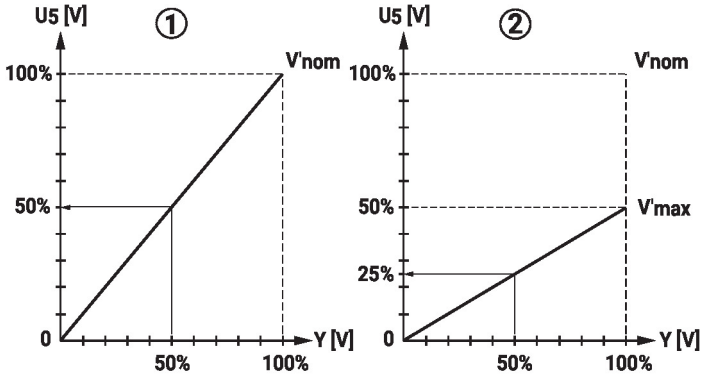

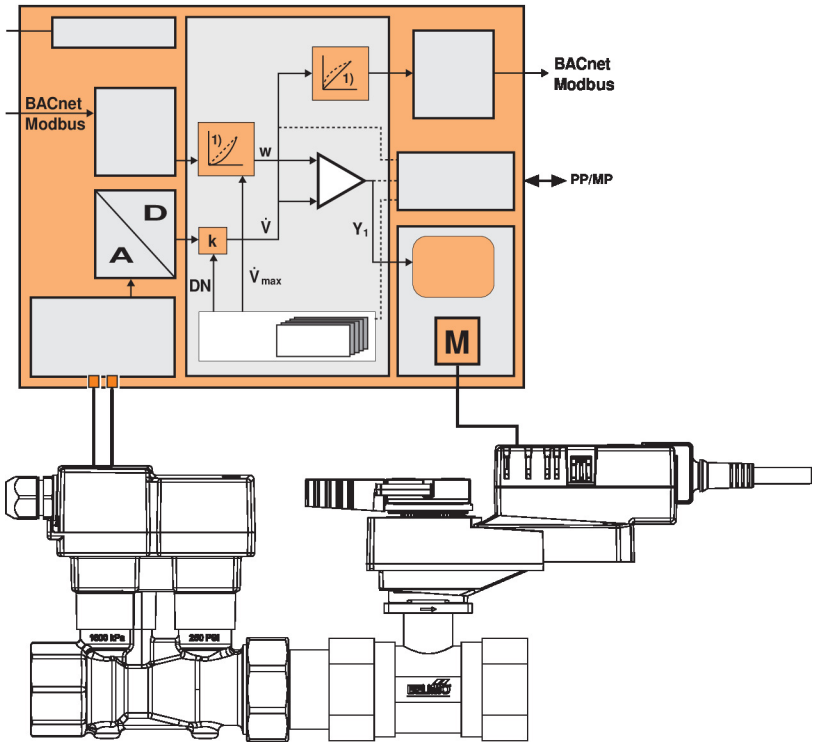

Flow control

V'nom is the maximum possible flow.

V'max is the maximum flow rate which has been set with the highest control signal DDC. V'max can be set between 25% and 100% of V'nom.

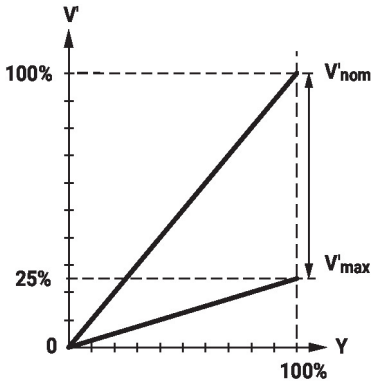

Fluid temperature measurement

The integrated temperature sensor within the flow sensor continuously measures the medium's temperature. This measured value can be accessed through the bus system or via the analog feedback signal U. Additionally, the current temperature reading is displayed in the Belimo Assistant App.

Creep flow suppression

Given the very low flow speed in the opening point, this can no longer be measured by the sensor within the required tolerance. This range is overridden electronically.

Opening valve

The valve remains closed until the flow required by the control signal DDC corresponds to 1% of V'nom. The control along the flow characteristic is active after this value has been exceeded.

Closing valve

The control along the flow characteristic is active up to the required flow rate of 1% of V'nom. Once the level falls below this value, the flow rate is maintained at 1% of V'nom. If the level falls below the flow rate of 0.5% of V'nom required by the control signal DDC, then the valve will close.

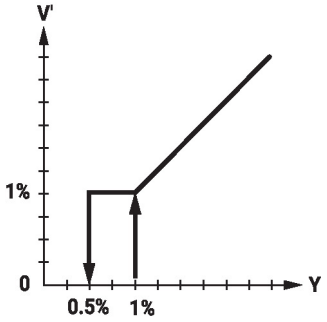

Converter for sensors

Connection option for a sensor (active or with switching contact). In this way, the analog sensor signal can be easily digitized and transferred to the bus systems BACnet, Modbus or MP-Bus.

Control signal inversion

This can be inverted in cases of control with an analog control signal. The inversion causes the reversal of the standard behavior, i.e. at a control signal of 0%, is equal to V'max, and the valve is closed at a control signal of 100%.

Hydronic balancing

With the Belimo tools, the maximum flow rate (equivalent to 100% requirement) can be adjusted on-site, simply and reliably, in a few steps. If the device is integrated in the management system, then the balancing can be handled directly by the management system.

Product features

Combination analogue - communicative (hybrid mode)
With conventional control by means of an analog control signal DDC, BACnet, Modbus, or MP-Bus can be used for the communicative position feedback.

Manual override
Manual control with push-button possible - temporary. The gear train is disengaged and the actuator decoupled for as long as the button is pressed.

Accessories

Tools	Description	Type
	Converter Bluetooth / NFC	ZIP-BT-NFC

Electrical installation

Supply from isolating transformer.

The wiring of the line for BACnet MS/TP / Modbus RTU is to be carried out in accordance with applicable RS485 regulations.

Modbus / BACnet: Supply and communication are not a galvanic dry contact. COM and the ground of the devices must be connected.

Analogue output: An analogue output (wire 5) is available on the flow sensor. It can be selected as 0...10 V, 0.5...10 V, 2...10 V or user defined. For example, the flow rate or the temperature of the temperature sensor (Pt1000 - EN 60751, 2-wire technology) can be output as an analogue value.

Wire colors:
1 = black
2 = red
3 = white
5 = orange
6 = pink
7 = grey

Functions:
C1 = D- = A (wire 6)
C2 = D+ = B (wire 7)

AC/DC 24 V, modulating

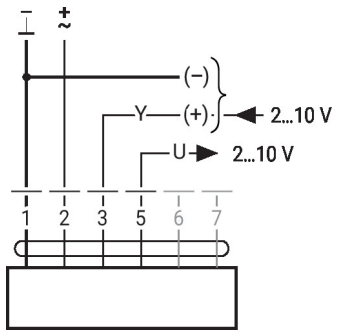

Modbus RTU / BACnet MS/TP with analog setpoint (hybrid operation)

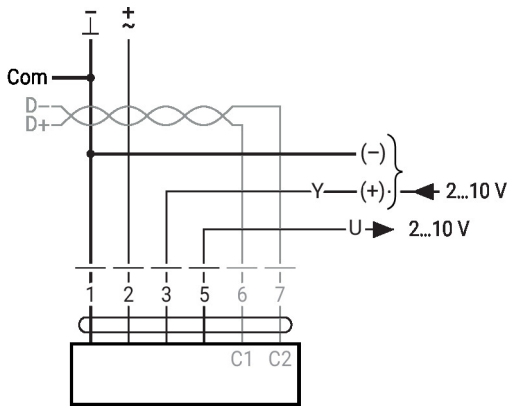

Electrical installation

BACnet MS/TP / Modbus RTU

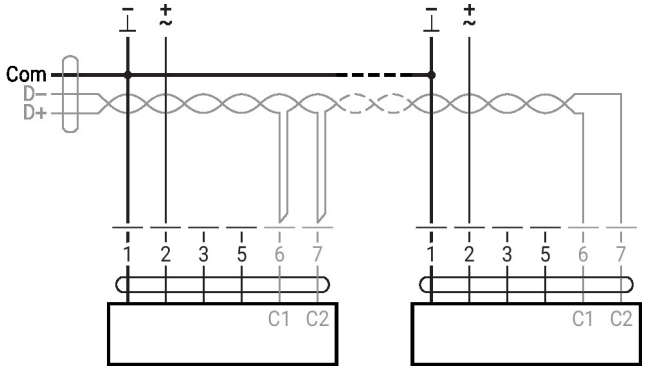

MP-Bus

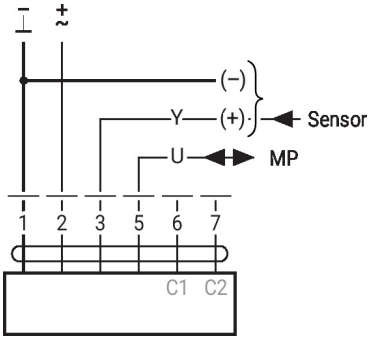

Converter for sensors

Connection with switching contact, e.g. Δp monitor

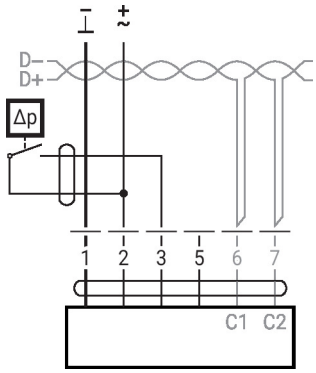

Switching contact requirements: The switching contact must be able to switch a current of 16 mA at 24 V accurately.

Connection with switching contact, e.g. Δp monitor

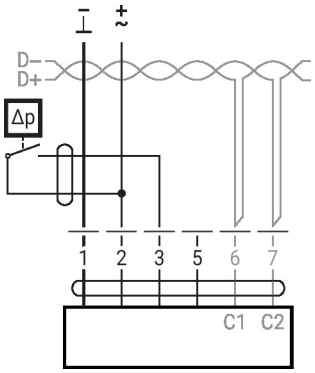

Switching contact requirements: The switching contact must be able to switch a current of 16 mA at 24 V accurately.

Connection with active sensor, e.g. 0...10 V @ 0...50°C

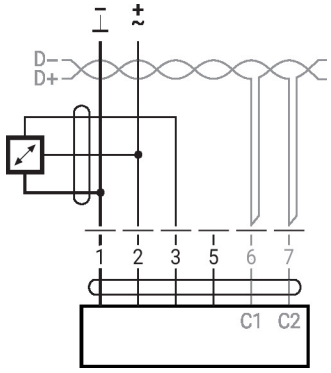

Possible voltage range: 0...32 V
Resolution 30 mV

Further electrical installations

Functions with specific parameters (parametrisation necessary)

Override control and limiting with AC 24 V with relay contacts

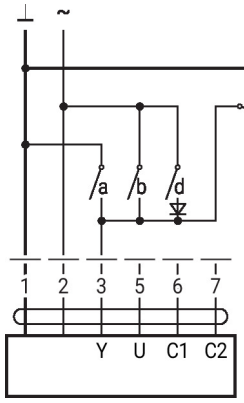

e.g. 1N 4007

1	2	a	b	d	e		Inv.
						Close[1]	Open[1]
						V'_{min} [2]	V'_{max} [2]
						V'_{max}	V'_{max}
						Open	Open
						Y	Y

1) Position control
2) Flow control
Inv. = control signal inverted

Override control and limiting with DC 24 V with relay contacts (with conventional control or hybrid mode)

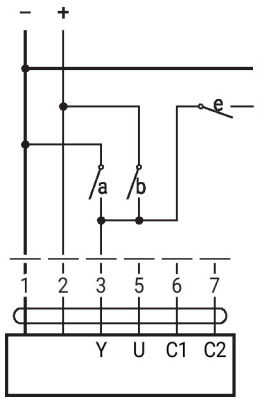

1	2	a	b	e		Inv.
					Close[1]	Open[1]
					V'_{min} [2]	V'_{max} [2]
					Y	Y
					Open[1]	Open[1]
					V'_{max} [2]	V'_{max} [2]

1) Position control
2) Flow control

Control 3-point with AC 24 V

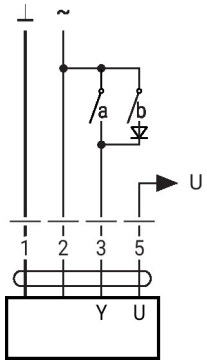

e.g. 1N 4007

1	2	3 (a)	3 (b)	
				stop

Position control: 90° = 100s
Flow control: Vmax = 100s

Further electrical installations

Functions with specific parameters (parametrisation necessary)

BACnet MS/TP / Modbus RTU with analogue setpoint (hybrid mode)

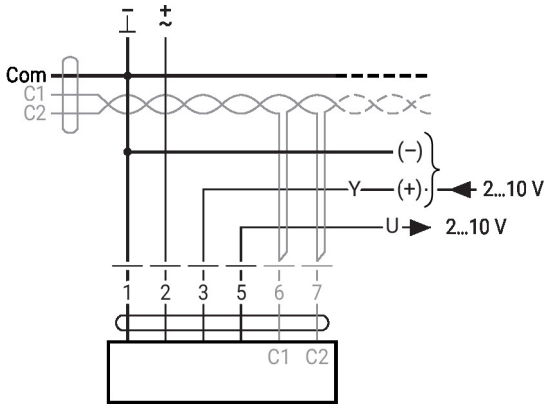

MP-Bus, supply via 3-wire connection

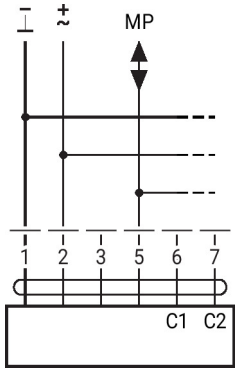

MP-Bus via 2-wire connection, local power supply

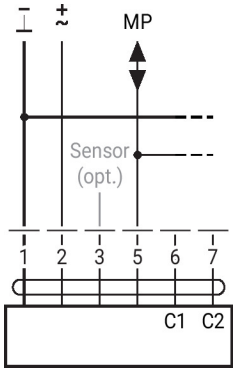

Operating controls and indicators

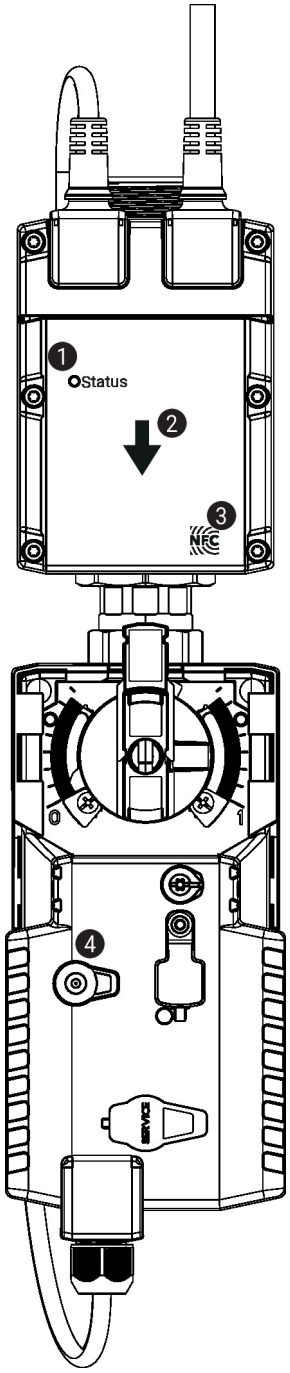

1 LED display green

On:	Device starting up
Off:	No power supply or wiring error
Flashing:	In operation (voltage ok)

2 Flow direction

3 NFC interface

4 Manual override button

Press button:	Gear train disengages, motor stops, manual override possible
Release button:	Gear train engages, standard mode. Device performs synchronization.

Operating controls and indicators

Setting fail-safe position

Setting fail-safe position (POP)

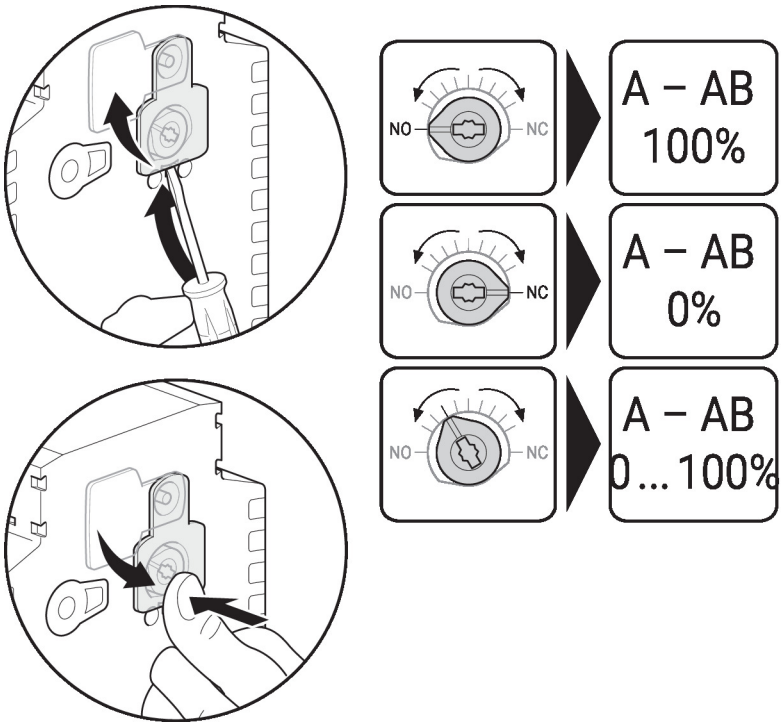

Installation notes

Permissible installation orientation

The ball valve can be installed upright to horizontal. The ball valve may not be installed in a hanging position, i.e. with the stem pointing downwards.

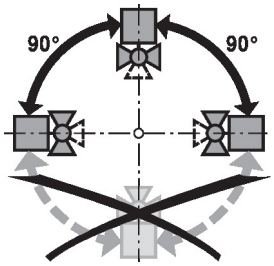

Installation location in return

Installation in the return is recommended.

Water quality requirements

The water quality requirements specified in VDI 2035 must be adhered to.

Belimo valves are regulating devices. For the valves to function correctly in the long term, they must be kept free from particle debris (e.g. welding beads during installation work). The installation of a suitable strainer is recommended.

Servicing

Ball valves, rotary actuators and sensors are maintenance-free.

Before any service work on the control element is carried out, it is essential to isolate the rotary actuator from the power supply (by unplugging the electrical cable if necessary). Any pumps in the part of the piping system concerned must also be switched off and the appropriate slide valves closed (allow all components to cool down first if necessary and always reduce the system pressure to ambient pressure level).

The system must not be returned to service until the ball valve and the rotary actuator have been correctly reassembled in accordance with the instructions and the pipeline has been refilled by professionally trained personnel.

Flow direction

The direction of flow, specified by an arrow on the housing, is to be complied with, since otherwise the flow rate will be measured incorrectly.

Installation notes

Cleaning of pipes Before installing the valve, the circuit must be thoroughly rinsed to remove impurities.

Prevention of stresses The valve must not be subjected to excessive stress caused by pipes or fittings.

Inlet section There are no requirements for straight inlet sections prior to the flow sensor. Product has been tested to and fulfills the requirements of EN1434-4:2022

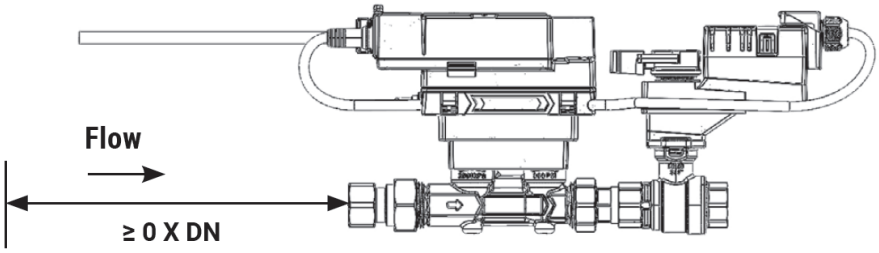

Split installation The valve-actuator combination may be mounted separately from the flow sensor. The direction of flow of both components must be observed.

General notes

Behaviour in case of sensor failure In case of a flow sensor error, the EPIV will switch from flow control to position control.
Once the error disappears, the EPIV will switch back to the normal control setting.

Dimensions

Dimensional drawings

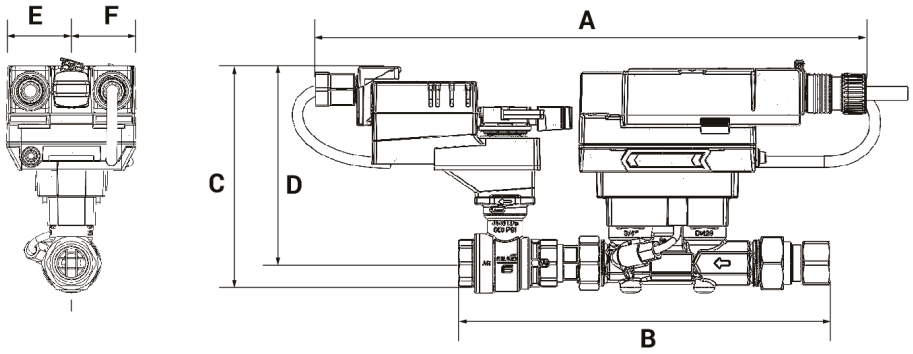

Type				Weight	
EP050+LRX-E				5.3 lb [2.4 kg]	
A	**B**	**C**	**D**	**E**	**F**
12.8" [325]	8.8” [224]	6.1" [154]	5.4” [137]	1.8" [46]	1.8" [46]