- Nominal voltage AC/DC 24 V
- Control Modulating, Communicative, Hybrid, Cloud
- Measures Energy
- Controls Power
- Manages Delta T

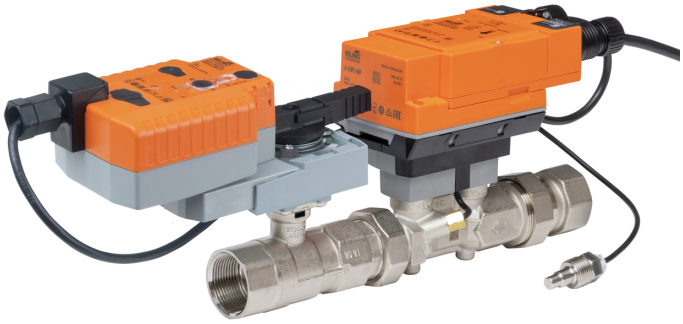

5-year warranty

BELIMO CLOUD

BACnet

Modbus

MP-BUS

NFC

Technical data

Electrical data	Nominal voltage	AC/DC 24 V
	Nominal voltage frequency	50/60 Hz
	Nominal voltage range	AC 19.2...28.8 V / DC 21.6...28.8 V
	Power consumption in operation	14 W
	Transformer sizing	23 VA
	Connection Ethernet	RJ45 socket
	Conductors, cables	AC/DC 24 V, cable length <100 m, no shielding or twisting required Shielded cables are recommended for supply via PoE
Data bus communication	Communicative control	BACnet/IP, BACnet MS/TP Modbus TCP, Modbus RTU MP-Bus Cloud
Functional data	Valve size [mm]	0.5" [15]
	Operating range Y	2...10 V
	Operating range Y note	4...20 mA w/ ZG-R01 (500 Ω, 1/4 W resistor)
	Input impedance	100 kΩ (0.1 mA), 500 Ω
	Operating modes optional	VDC variable
	Position feedback U	2...10 V
	Position feedback U variable	VDC variable
	Running Time (Motor)	90 s
	Running time fail-safe	<35 s
	Noise level Motor	45 dB(A)
	Noise level, fail-safe	61 dB(A)
	Control accuracy	±5%
	Min. controllable flow	1% of V'nom
	Fluid	chilled or hot water, up to 60% glycol max (open loop/steam not allowed)
	Fluid temperature	14...250°F [-10...120°C]

Technical data

Functional data	Close-off pressure Δps	200 psi
	Differential Pressure Range	5...50 psi or 1...50 psi see flow reductions chart in tech doc
	Flow characteristic	equal percentage or linear
	Body Pressure Rating	360 psi
	GPM	6.6
	Pipe connection	Internal thread NPT (female)
	Servicing	maintenance-free
	Manual override	external push button
Measuring data	Temperature sensor	Pt1000 - EN 60751, 2-wire technology, inseparably connected Cable length external sensor T1: 3 m
Temperature measurement	Measuring accuracy absolute temperature	32.6°F @ 50°F [± 0.35°C @ 10°C] (Pt1000 EN60751 Class B) 33°F @ 140°F [± 0.6°C @ 60°C] (Pt1000 EN60751 Class B)
	Measuring accuracy temperature difference	±0.22 K @ ΔT = 10 K ±0.32 K @ ΔT = 20 K
	Resolution	0.05°C
Flow measurement	Measuring accuracy flow	±2%*
	Measurement repeatability	±0.5% (Flow)
	Sensor technology	Ultrasonic with glycol and temperature compensation
Safety data	Power source UL	Class 2 Supply
	Degree of protection IEC/EN	IP54 IP54 when using protective cap or protective grommet for RJ45 socket. Sensor module: IP65
	Degree of protection NEMA/UL	NEMA 1
	Enclosure	UL Enclosure Type 1
	Agency Listing	cULus acc. to UL60730-1A/-2-14, CAN/CSA E60730-1:02 CE acc. to 2014/30/EU and 2014/35/EU
	Quality Standard	ISO 9001
	UL 2043 Compliant	Suitable for use in air plenums per Section 300.22(C) of the NEC and Section 602 of the IMC
	Ambient humidity	Max. 95% RH, non-condensing
	Ambient temperature	-22...122°F [-30...50°C]
	Storage temperature	-40...176°F [-40...80°C]
Materials	Valve body	Nickel-plated brass body
	Flow measuring pipe	brass body nickel-plated
	Stem	stainless steel
	Stem seal	EPDM (lubricated)
	Seat	PTFE
	Characterized disc	TEFZEL®
	O-ring	EPDM
	Ball	stainless steel

Safety notes



- This device has been designed for use in stationary heating, ventilation and air-conditioning systems and must not be used outside the specified field of application, especially in aircraft or in any other airborne means of transport.
- Outdoor application: only possible in case that no (sea) water, snow, ice, insolation or aggressive gases interfere directly with the actuator and that is ensured that the ambient conditions remain at any time within the thresholds according to the data sheet.
- Only authorized specialists may carry out installation. All applicable legal or institutional installation regulations must be complied with during installation.
- The device contains electrical and electronic components and must not be disposed of as household refuse. All locally valid regulations and requirements must be observed.

Product features

Application

Water-side control of heating and cooling systems for AHUs and water coils.

Operation

The Energy Valve is an energy metering pressure independent control valve that measures, documents and optimises water coil performance.

Operating mode

The HVAC performance device is comprised of four components: characterized control valve (CCV), measuring pipe with flow sensor, temperature sensors and the actuator itself. The adjusted maximum flow (V'max) is assigned to the maximum control signal DDC (typically 10 V / 100%). Alternatively, the control signal DDC can be assigned to the valve opening angle or to the power required on the heat exchanger (see power control). The HVAC performance device can be controlled via communicative or analog signals. The fluid is detected by the sensor in the measuring pipe and is applied as the flow value. The measured value is balanced with the setpoint. The actuator corrects the deviation by changing the valve position. The angle of rotation α varies according to the differential pressure through the control element (see flow curves).

Flow measurement

*All flow tolerances are at 68°F [20°C] & water.

Accessories

Replacement sensor modules

Description	Type
T-piece with thermowell DN 1/2" [15]	A-22PE-A09
T-piece with thermowell DN 3/4" [20]	A-22PE-A10
T-piece with thermowell DN 1" [25]	A-22PE-A11
T-piece with thermowell DN 1 1/4" [32]	A-22PE-A12
T-piece with thermowell DN 1 1/2" [40]	A-22PE-A13
T-piece with thermowell DN 2" [50]	A-22PE-A14

Tools

Description	Type
Converter Bluetooth / NFC	ZIP-BT-NFC

Sensors

Description	Type
Differential pressure sensor Water, 0...15 psi, active, 0...10 V	22WDP-511
Differential pressure sensor Water, 0...30 psi, active, 0...10 V	22WDP-512
Differential pressure sensor Water, 0...50 psi, active, 0...10 V	22WDP-514
Differential pressure sensor Water, 0...100 psi, active, 0...10 V	22WDP-515

Electrical installation

Supply from isolating transformer.

Parallel connection of other actuators possible. Observe the performance data.

The wiring of the line for BACnet MS/TP / Modbus RTU is to be carried out in accordance with applicable RS485 regulations.

Modbus / BACnet: Supply and communication are not galvanically isolated. Connect earth signal of the devices with one another.

Sensor connection: An additional sensor can optionally be connected to the thermal energy meter. This can be a passive resistance sensor Pt1000, Ni1000, NTC10k (10k2), an active sensor with output DC 0...10 V or a switching contact. Thus the analogue signal of the sensor can be easily digitised with the thermal energy meter and transferred to the corresponding bus system.

Analog output: An analog output is available on the thermal energy meter. This can be selected as DC 0...10 V, DC 0.5...10 V or DC 2...10 V. For example, the flow rate or the temperature of the temperature sensor T1 / T2 can be output as an analog value.

Wire colors:
1 = black
2 = red
3 = white
5 = orange
6 = pink
7 = grey

Functions:
1 = Com
2 = AC/DC 24 V
3 = Sensor (optional)
5 = 0...10 V, MP-Bus
C1 = D- = A (wire 6)
C2 = D+ = B (wire 7)

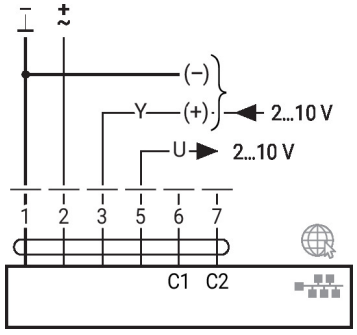

BACnet MS/TP / Modbus RTU

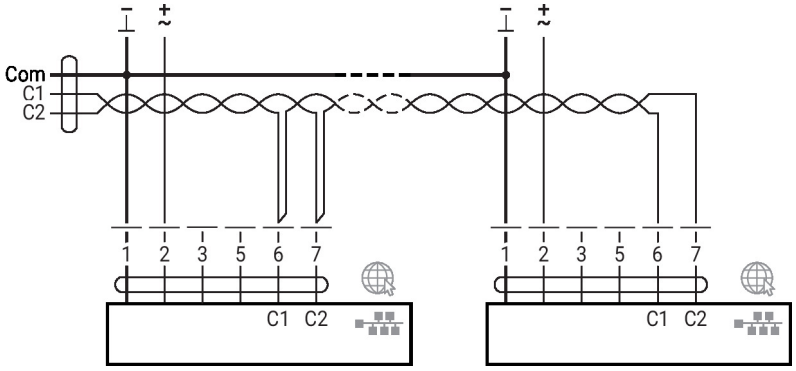

Electrical installation

BACnet/IP / Modbus TCP

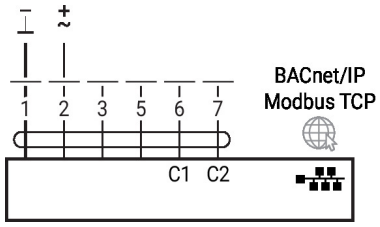

MP-Bus, supply via 3-wire connection

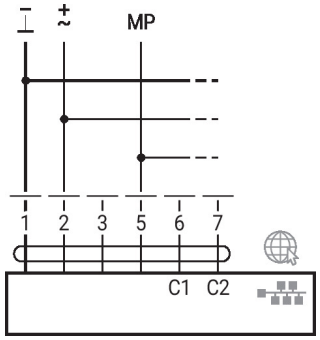

PoE with BACnet/IP / Modbus TCP

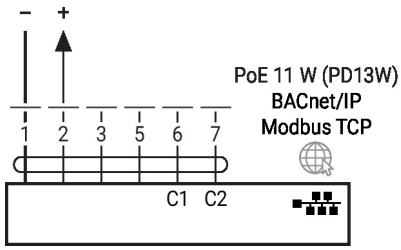

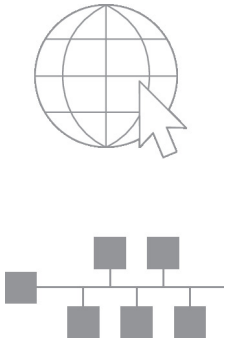

Connection of a notebook for parametrisation and manual control via RJ45.

Optional connection via RJ45 (direct connection to notebook / connection via Intranet or Internet) for access to the integrated web server

Converter for sensors

Connection with passive sensor

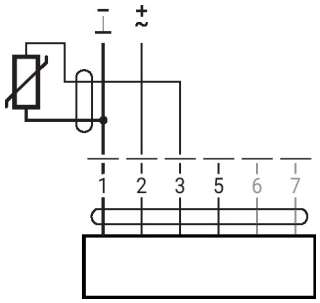

Connection with switching contact

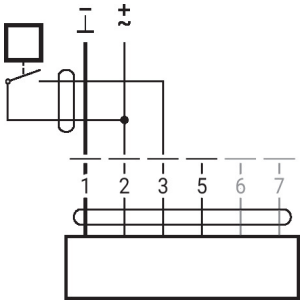

Connection with active sensor

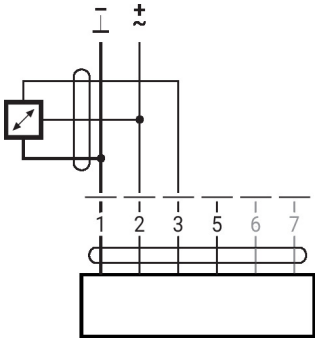

Functions

Functions with specific parameters (parametrisation necessary)

Override control and limiting with AC 24 V with relay contacts

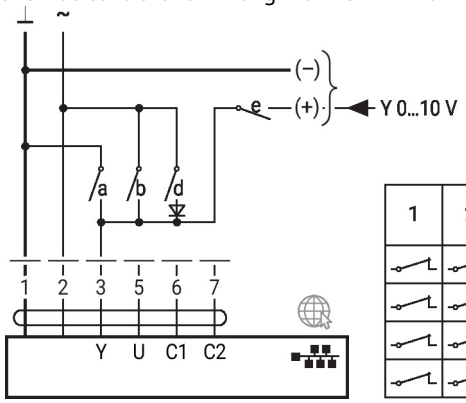

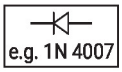

1	2	a	b	d	e	
						Close
						V'_{max}
						Open
						Y

Functions with specific parameters (parametrisation necessary)

Override control and limiting with DC 24 V with relay contacts (with conventional control or hybrid mode)

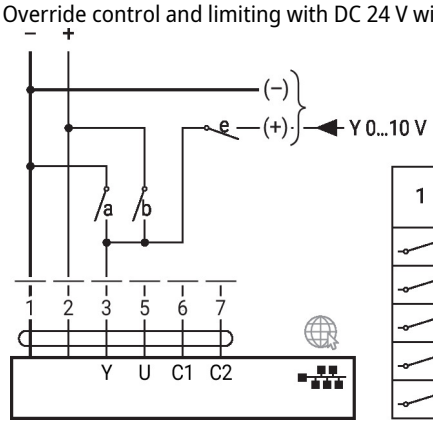

1	2	a	b	e	
					Close
					Y
					Open[1]
					V'_{max} [2]
					Q'_{max} [3]

1) Position control
2) Flow control
3) Power control

Override control and limiting with DC 24 V with relay contacts (with conventional control or hybrid mode)

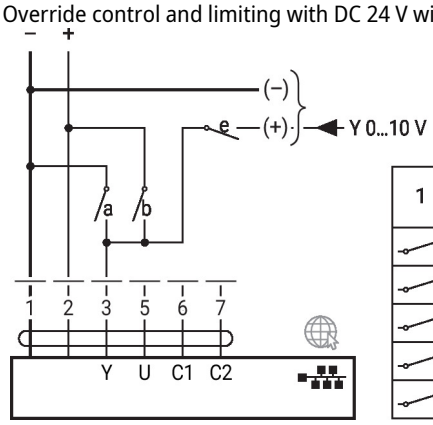

1	2	a	b	e	
					Close
					Y
					Open[1]
					V'_{max} [2]
					Q'_{max} [3]

1) Position control
2) Flow control
3) Power control

MP-Bus, supply via 3-wire connection

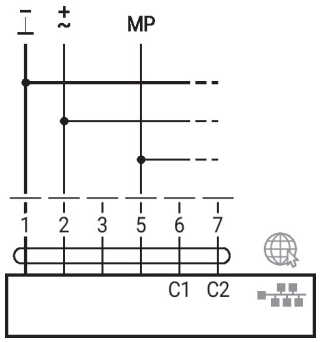

MP-Bus via 2-wire connection, local power supply

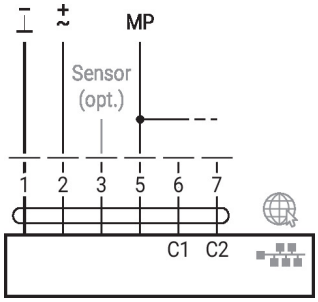

M-Bus with converter

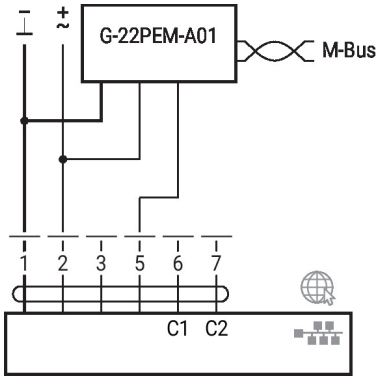

Functions

Functions with specific parameters (parametrisation necessary)

M-Bus with converter in parallel mode with PoE with BACnet/IP / Modbus TCP

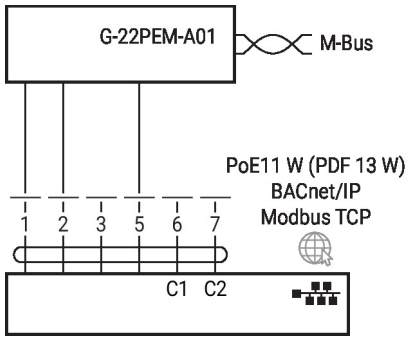

M-Bus with converter in parallel mode with BACnet/IP / Modbus TCP

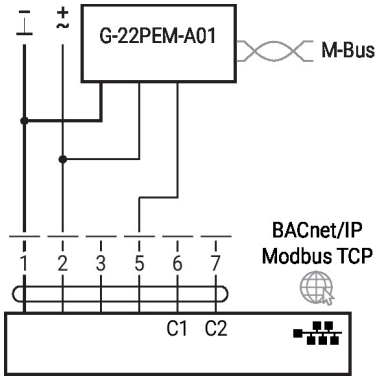

Differential pressure control operating mode

Connection of differential pressure sensor 22WDP-51.. (sensor not included)

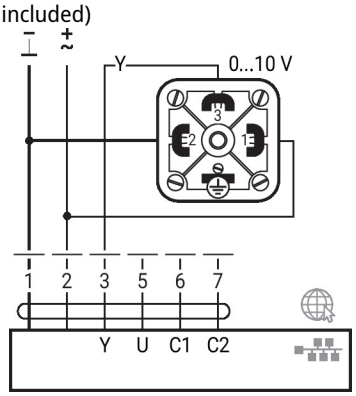

Operating controls and indicators

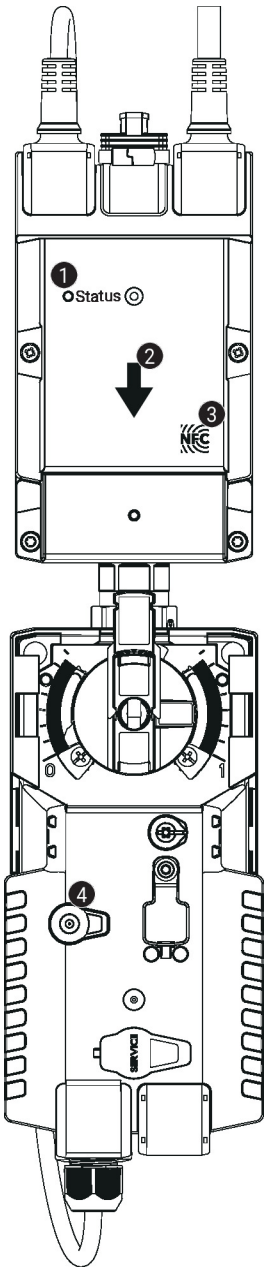

1 LED display green

On:	Device starting up
Flashing:	In operation (Power ok)
Off:	No power

2 Flow direction

3 NFC interface

4 Manual override button

Press button:	Gear train disengages, motor stops, manual override possible
Release button:	Gear train engages, standard mode

Operating controls and indicators

Setting fail-safe position

Setting emergency setting position (POP)

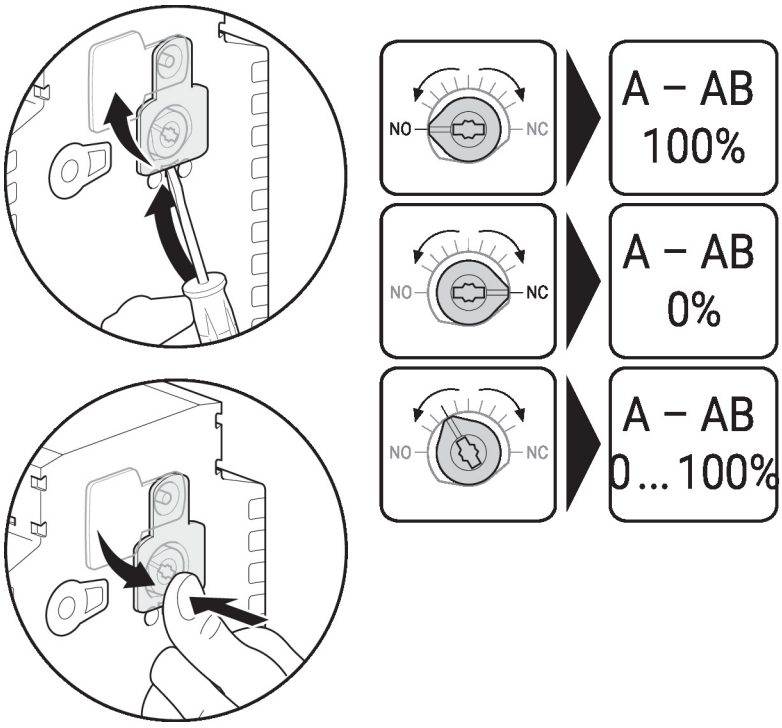

Installation notes

Permissible installation orientation

The ball valve can be installed upright to horizontal. The ball valve may not be installed in a hanging position, i.e. with the stem pointing downwards.

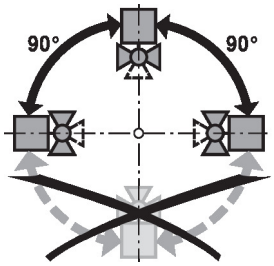

Installation location in return

Installation in the return is recommended.

Water quality requirements

The water quality requirements specified in VDI 2035 must be adhered to.

Belimo valves are regulating devices. For the valves to function correctly in the long term, they must be kept free from particle debris (e.g. welding beads during installation work). The installation of a suitable strainer is recommended.

Servicing

Ball valves, rotary actuators and sensors are maintenance-free.

Before any service work on the control element is carried out, it is essential to isolate the rotary actuator from the power supply (by unplugging the electrical cable if necessary). Any pumps in the part of the piping system concerned must also be switched off and the appropriate slide valves closed (allow all components to cool down first if necessary and always reduce the system pressure to ambient pressure level).

The system must not be returned to service until the ball valve and the rotary actuator have been correctly reassembled in accordance with the instructions and the pipeline has been refilled by professionally trained personnel.

Flow direction

The direction of flow, specified by an arrow on the housing, is to be complied with, since otherwise the flow rate will be measured incorrectly.

Installation notes

Inlet section There are no requirements for straight inlet sections prior to the flow sensor. Product has been tested to and fulfills the requirements of EN1434-4:2022

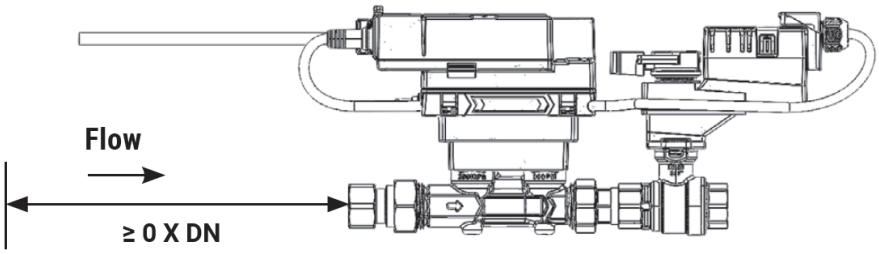

Dimensions

Dimensional drawings

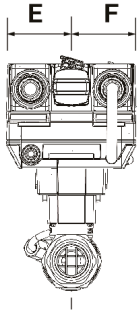

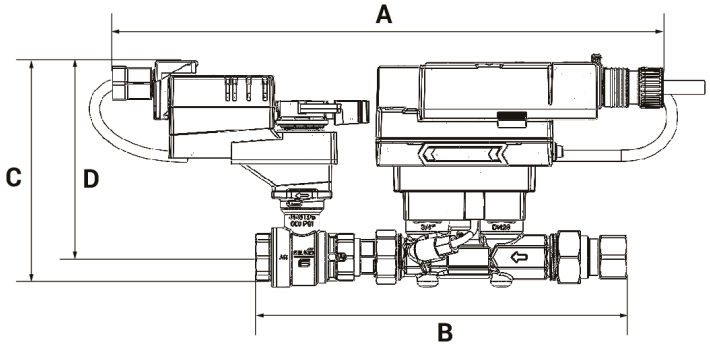

Type				Weight	
EV050+AKRX-E				6.5 lb [2.9 kg]	
A	**B**	**C**	**D**	**E**	**F**
16.6" [422]	8.8" [224]	6.1" [154]	5.4" [137]	1.8" [46]	1.8" [46]