MAXIMATOR®

Air Valve Actuators
Air to Open, Normally Closed

Order Information

Select the basic manual valve from the appropriate pressure section, then add the actuator suffix number to the end of the manual valve catalog number.
Example: 21V4M071-**YMNC,** medium duty actuator, normally closed. This valve can be operated at 21,000 psi with an air supply of 100 psi to the valve actuator.

Technical Information

Maximum allowable working pressure for actuator:
Maximum operating temperature range for actuator:
Actuator material:
Air connection size:

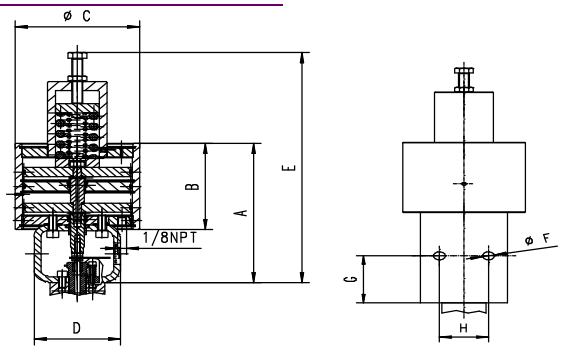

Actuator type	Ordering suffix	Piston area in.² (mm²)	B in. (mm)	C in. (mm)	D in. (mm)	E* in. (mm)	F in. (mm)	G in. (mm)	H in. (mm)
Medium duty	**4;6;9-YMNC**	19.6 **(12,645)**	2,69 **(68.3)**	5,67 **(144)**	3,94 **(100)**	10,09 **(256.3)**	0,28 **(7.1)**	1,57 **(39.9)**	1,13 **(28.7)**
Heavy duty	**4;6;9-YHNC**	39.2 **(25,290)**	4,72 **(119.9)**	5,67 **(144)**	3,94 **(100)**	12,59 **(320)**	0,28 **(7.1)**	1,57 **(39.9)**	1,13 **(28.7)**
Heavy duty	**12;16-YHNC**	39.2 **(25,290)**	4,72 **(119.9)**	5,67 **(144)**	3,94 **(100)**	13,27 **(337.8)**	0,28 **(7.1)**	2,47 **(62.7)**	1,13 **(28.7)**

* E dimension is an approximation only.

Valve Series	Air Actuator Type	Air Actuator Ordering Suffix	Air Actuator Data	Air Pressure Required to Open Valve At: System Pressure ksi (bar) 6 (410)	8 (550)	10 (700)	12 (830)	14 (970)	16 (1,100)	18 (1,250)	20 (1,400)	21 (1,500)	Max. Pressure psi (bar)	Flow Value Cv*
21V4	Medium Duty	-YMNC	Air Pressure psi (bar)	65 (4,5)	65 (4,5)	75 (5,2)	85 (5,9)	95 (6,6)	95 (6,6)	95 (6,6)	95 (6,6)	100 (6,9)	21000 (1500)	0.31 - 0.22
			Spring Pre-compression in. (mm)	0,19 (4,8)	0,19 (4,8)	0,25 (6,4)	0,31 (7,9)	0,38 (9,7)	0,44 (11,2)	0,5 (12,7)	0,56 (14,2)	0,59 (15)		
			Stem Travel in. (mm)	0,25 (6,4)	0,25 (6,4)	0,25 (6,4)	0,25 (6,4)	0,25 (6,4)	0,19 (4,8)	0,12 (3)	0,06 (1,5)	0,03 (0,8)		
	Heavy Duty	-YHNC	Air Pressure psi (bar)	35 (2,4)	35 (2,4)	40 (2,8)	45 (3,1)	50 (3,5)	50 (3,5)	50 (3,5)	50 (3,5)	55 (3,8)	21000 (1500)	
			Spring Pre-compression in. (mm)	0,19 (4,8)	0,19 (4,8)	0,25 (6,4)	0,31 (7,9)	0,38 (9,7)	0,44 (11,2)	0,5 (12,7)	0,56 (14,2)	0,59 (15)		
			Stem Travel in. (mm)	0,25 (6,4)	0,25 (6,4)	0,25 (6,4)	0,25 (6,4)	0,25 (6,4)	0,19 (4,8)	0,12 (3)	0,06 (1,5)	0,03 (0,8)		
21V6	Medium Duty	-YMNC	Air Pressure psi (bar)	65 (4,5)	75 (5,2)	85 (5,9)	95 (6,6)	95 (6,6)	95 (6,6)	95 (6,6)			18250 (1250)	0.75 - 0.57
			Spring Pre-compression in. (mm)	0,19 (4,8)	0,25 (6,4)	0,31 (7,9)	0,38 (9,7)	0,44 (11,2)	0,5 (12,7)	0,56 (14,2)				
			Stem Travel in. (mm)	0,25 (6,4)	0,25 (6,4)	0,25 (6,4)	0,25 (6,4)	0,19 (4,8)	0,12 (3)	0,06 (1,5)				
	Heavy Duty	-YHNC	Air Pressure psi (bar)	35 (2,4)	40 (2,8)	45 (3,1)	50 (3,5)	50 (3,5)	50 (3,5)	50 (3,5)			18250 (1250)	
			Spring Pre-compression in. (mm)	0,19 (4,8)	0,25 (6,4)	0,31 (7,9)	0,38 (9,7)	0,44 (11,2)	0,5 (12,7)	0,56 (14,2)				
			Stem Travel in. (mm)	0,25 (6,4)	0,25 (6,4)	0,25 (6,4)	0,25 (6,4)	0,19 (4,8)	0,12 (3)	0,06 (1,5)				
21V9	Medium Duty	-YMNC	Air Pressure psi (bar)	90 (6,2)	95 (6,6)	95 (6,6)							9800 (675)	1.29 - 0.53
			Spring Pre-compression in. (mm)	0,34 (8,6)	0,47 (11,9)	0,56 (14,2)								
			Stem Travel in. (mm)	0,25 (6,4)	0,15 (3,8)	0,06 (1,5)								
	Heavy Duty	-YHNC	Air Pressure psi (bar)	55 (3,8)	65 (4,5)	70 (4,9)	75 (5,2)	75 (5,2)	75 (5,2)				15700 (1080)	
			Spring Pre-compression in. (mm)	0,22 (5,6)	0,28 (7,1)	0,34 (8,6)	0,44 (11,2)	0,5 (12,7)	0,56 (14,2)					
			Stem Travel in. (mm)	0,25 (6,4)	0,25 (6,4)	0,25 (6,4)	0,19 (4,8)	0,12 (3)	0,06 (1,5)					
21V12	Heavy Duty	-YHNC	Air Pressure psi (bar)	75 (5,2)	75 (5,2)								9200 (630)	0.80 - 0.78
			Spring Pre-compression in. (mm)	0,38 (9,7)	0,56 (14,2)									
			Stem Travel in. (mm)	0,25 (6,4)	0,06 (1,5)									
21V16	Heavy Duty	-YHNC	Air Pressure psi (bar)	75 (5,2)									6100 (420)	2.73 - 0.15
			Spring Pre-compression in. (mm)	0,56 (14,2)										
			Stem Travel in. (mm)	0,06 (1,5)										

* Cv values are for straight pattern valves, increase this value by 50% for angle pattern valves.
Cv values vary due to compression of actuator spring, and are adjusted based on system pressure.
Values shown are for maximum to minimum stem travel position.

All general terms and conditions of sale, including limitations of our liability, apply to all products and services sold.

MAXIMATOR®

Air Valve Actuators
Air to Open, Normally Closed

Valve Series	Air Actuator Type	Ordering Suffix	Data	Air Pressure Required to Open Valve At: System Pressure ksi (bar) 1-12 (68-830)	14 (970)	16 (1100)	18 (1250)	20 (1400)	22 (1500)	24 (1650)	26 (1800)	28 (1900)	30 (2000)	36 (2500)	Max. Pressure psi (bar)	Flow Value Cv*
36V4	Medium Duty	-YMNC	Air Pressure psi (bar)	45 (3,1)	55 (3,8)	55 (3,8)	55 (3,8)	55 (3,8)	65 (4,5)	65 (4,5)	65 (4,5)	65 (4,5)	75 (5,2)	85 (5,9)	36000 (2500)	0,12
			Spring Pre-compression in. (mm)	0,12 (3)	0,19 (4,8)	0,19 (4,8)	0,19 (4,8)	0,19 (4,8)	0,25 (6,4)	0,25 (6,4)	0,25 (6,4)	0,25 (6,4)	0,31 (7,9)	0,37 (9,4)		
			Stem Travel in. (mm)	0,19 (4,8)	0,19 (4,8)	0,19 (4,8)	0,19 (4,8)	0,19 (4,8)	0,19 (4,8)	0,19 (4,8)	0,19 (4,8)	0,19 (4,8)	0,19 (4,8)	0,19 (4,8)		
	Heavy Duty	-YHNC	Air Pressure psi (bar)	25 (1,7)	30 (2,1)	30 (2,1)	30 (2,1)	30 (2,1)	35 (2,4)	35 (2,4)	35 (2,4)	35 (2,4)	40 (2,8)	45 (3,1)	36000 (2500)	
			Spring Pre-compression in. (mm)	0,12 (3)	0,19 (4,8)	0,19 (4,8)	0,19 (4,8)	0,19 (4,8)	0,25 (6,4)	0,25 (6,4)	0,25 (6,4)	0,25 (6,4)	0,31 (7,9)	0,37 (9,4)		
			Stem Travel in. (mm)	0,19 (4,8)	0,19 (4,8)	0,19 (4,8)	0,19 (4,8)	0,19 (4,8)	0,19 (4,8)	0,19 (4,8)	0,19 (4,8)	0,19 (4,8)	0,19 (4,8)	0,19 (4,8)		
36V6 & 36V9	Medium Duty	-YMNC	Air Pressure psi (bar)	55 (3,8)	55 (3,8)	65 (4,5)	65 (4,5)	75 (5,2)	75 (5,2)	75 (5,2)	85 (5,9)	85 (5,9)	95 (6,6)	100 (6,9)	36000 (2500)	0,12
			Spring Pre-compression in. (mm)	0,19 (4,8)	0,19 (4,8)	0,25 (6,4)	0,25 (6,4)	0,31 (7,9)	0,31 (7,9)	0,31 (7,9)	0,38 (9,7)	0,38 (9,7)	0,44 (11,2)	0,5 (12,7)		
			Stem Travel in. (mm)	0,19 (4,8)	0,19 (4,8)	0,19 (4,8)	0,19 (4,8)	0,19 (4,8)	0,19 (4,8)	0,19 (4,8)	0,19 (4,8)	0,19 (4,8)	0,19 (4,8)	0,19 (4,8)		
	Heavy Duty	-YHNC	Air Pressure psi (bar)	30 (2,1)	30 (2,1)	35 (2,4)	35 (2,4)	40 (2,8)	40 (2,8)	40 (2,8)	45 (3,1)	45 (3,1)	50 (3,5)	55 (3,8)	36000 (2500)	0,33
			Spring Pre-compression in. (mm)	0,19 (4,8)	0,19 (4,8)	0,25 (6,4)	0,25 (6,4)	0,31 (7,9)	0,31 (7,9)	0,31 (7,9)	0,38 (9,7)	0,38 (9,7)	0,44 (11,2)	0,5 (12,7)		
			Stem Travel in. (mm)	0,19 (4,8)	0,19 (4,8)	0,19 (4,8)	0,19 (4,8)	0,19 (4,8)	0,19 (4,8)	0,19 (4,8)	0,19 (4,8)	0,19 (4,8)	0,19 (4,8)	0,19 (4,8)		

Valve Series	Air Actuator Type	Ordering Suffix	Data	1-15 (68-1050)	20 (1400)	25 (1800)	30 (2000)	35 (2400)	40 (2800)	45 (3100)	50 (3500)	55 (3800)	60 (4100)	65 (4500)	Max. Pressure psi (bar)	Flow Value Cv*
65V4 & 65V6	Medium Duty	-YMNC	Air Pressure psi (bar)	55 (3,8)	65 (4,5)	65 (4,5)	65 (4,5)	75 (5,2)	75 (5,2)	85 (5,9)	85 (5,9)	85 (5,9)	95 (6,6)	100 (6,9)	65000 (4500)	0,08
			Spring Pre-compression in. (mm)	0,12 (3)	0,19 (4,8)	0,19 (4,8)	0,19 (4,8)	0,25 (6,4)	0,25 (6,4)	0,31 (7,9)	0,31 (7,9)	0,31 (7,9)	0,38 (9,7)	0,38 (9,7)		
			Stem Travel in. (mm)	0,25 (6,4)	0,25 (6,4)	0,25 (6,4)	0,25 (6,4)	0,25 (6,4)	0,25 (6,4)	0,25 (6,4)	0,25 (6,4)	0,25 (6,4)	0,25 (6,4)	0,25 (6,4)		
	Heavy Duty	-YHNC	Air Pressure psi (bar)	30 (2,1)	35 (2,4)	35 (2,4)	35 (2,4)	40 (2,8)	40 (2,8)	45 (3,1)	45 (3,1)	45 (3,1)	50 (3,5)	55 (3,8)	65000 (4500)	0,09
			Spring Pre-compression in. (mm)	0,12 (3)	0,19 (4,8)	0,19 (4,8)	0,19 (4,8)	0,25 (6,4)	0,25 (6,4)	0,31 (7,9)	0,31 (7,9)	0,31 (7,9)	0,38 (9,7)	0,44 (11,2)		
			Stem Travel in. (mm)	0,25 (6,4)	0,25 (6,4)	0,25 (6,4)	0,25 (6,4)	0,25 (6,4)	0,25 (6,4)	0,25 (6,4)	0,25 (6,4)	0,25 (6,4)	0,25 (6,4)	0,25 (6,4)		
65V9	Medium Duty	-YMNC	Air Pressure psi (bar)	55 (3,8)	65 (4,5)	65 (4,5)	75 (5,2)	75 (5,2)	85 (5,9)	95 (6,6)	95 (6,6)	95 (6,6)	95 (6,6)	100 (6,9)	65000 (4500)	1,04
			Spring Pre-compression in. (mm)	0,12 (3)	0,19 (4,8)	0,19 (4,8)	0,25 (6,4)	0,25 (6,4)	0,31 (7,9)	0,38 (9,7)	0,38 (9,7)	0,44 (11,2)	0,50 (12,7)	0,56 (14,2)		
			Stem Travel in. (mm)	0,25 (6,4)	0,25 (6,4)	0,25 (6,4)	0,25 (6,4)	0,25 (6,4)	0,25 (6,4)	0,25 (6,4)	0,25 (6,4)	0,19 (4,8)	0,12 (3)	0,06 (1,5)		
	Heavy Duty	-YHNC	Air Pressure psi (bar)	30 (2,1)	35 (2,4)	35 (2,4)	40 (2,8)	40 (2,8)	45 (3,1)	50 (3,5)	50 (3,5)	50 (3,5)	50 (3,5)	55 (3,8)	65000 (4500)	
			Spring Pre-compression in. (mm)	0,12 (3)	0,19 (4,8)	0,19 (4,8)	0,25 (6,4)	0,25 (6,4)	0,31 (7,9)	0,38 (9,7)	0,38 (9,7)	0,44 (11,2)	0,50 (12,7)	0,56 (14,2)		
			Stem Travel in. (mm)	0,25 (6,4)	0,25 (6,4)	0,25 (6,4)	0,25 (6,4)	0,25 (6,4)	0,25 (6,4)	0,25 (6,4)	0,25 (6,4)	0,19 (4,8)	0,12 (3)	0,66 (16,8)		

Valve Series	Air Actuator Type	Ordering Suffix	Data	1-10 (68-680)	20 (1400)	30 (2000)	40 (2800)	50 (3500)	60 (4100)	70 (4800)	80 (5500)	90 (6200)	101 (7000)		Max. Pressure psi (bar)	Flow Value Cv*
101V5	Heavy Duty	-YHNC	Air Pressure psi (bar)	35 (2,4)	35 (2,4)	40 (2,8)	40 (2,8)	45 (3,1)	50 (3,5)	55 (3,8)	60 (4,2)	70 (4,9)			90000 (6200)	0.09 - 0.07
			Spring Pre-compression in. (mm)	0,12 (3)	0,12 (3)	0,19 (4,8)	0,19 (4,8)	0,22 (5,6)	0,25 (6,4)	0,28 (7,1)	0,31 (7,9)	0,38 (9,7)				
			Stem Travel in. (mm)	0,12 (3)	0,12 (3)	0,12 (3)	0,12 (3)	0,12 (3)	0,12 (3)	0,12 (3)	0,12 (3)	0,12 (3)				

* Cv values are for straight pattern valves, increase this value by 50% for angle pattern valves.
Cv values vary due to compression of actuator spring, and are adjusted based on system pressure.
Values shown are for maximum to minimum stem travel position.

MAXIMATOR®

Air Valve Actuators
Air to Close, Normally Open

Order Information

Select the basic manual valve from the appropriate pressure section, then add the actuator suffix number to the end of the manual valve catalog number. Example: 21V4M071-YMNO, medium duty actuator, normally open. This valve can be operated at 21,000 psi with an air supply of 100 psi to the valve actuator.

Technical Information

Maximum allowable working pressure for actuator:	See table below for specific valve type
Maximum operating temperature range for actuator:	-20°F to +200°F (-30°C to +95°C)
Actuator material:	Anodized Aluminum
Air connection size:	1/8NPT

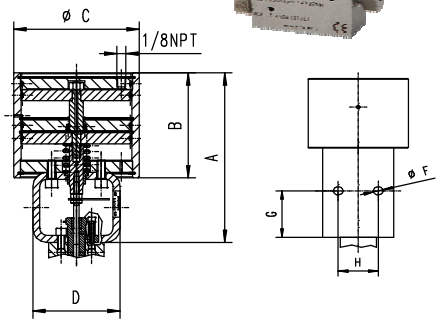

Actuator type	Ordering suffix	Piston area in.² (mm²)	A in. (mm)	B in. (mm)	C in. (mm)	D in. (mm)	F in. (mm)	G in. (mm)	H in. (mm)
Medium duty	**4;6;9-YMNO**	19.6 **(12,645)**	5,64 **(143,3)**	2,69 **(68,3)**	5,67 **(144,)**	3,94 **(100,1)**	0,28 **(7,1)**	1,57 **(39,9)**	1,13 **(28,7)**
Heavy duty	**4;6;9-YHNO**	39.2 **(25,290)**	7,63 **(193,8)**	4,72 **(119,9)**	5,67 **(144,)**	3,94 **(100,1)**	0,28 **(7,1)**	1,57 **(39,9)**	1,13 **(28,7)**
Medium duty	**12;16-YMNO**	19.6 **(12,645)**	6,43 **(163,3)**	2,69 **(68,3)**	5,67 **(144,)**	3,94 **(100,1)**	0,28 **(7,1)**	2,47 **(62,7)**	1,13 **(28,7)**
Heavy duty	**12;16-YHNO**	39.2 **(25,290)**	8,42 **(213,9)**	4,72 **(119,9)**	5,67 **(144,)**	3,94 **(100,1)**	0,28 **(7,1)**	2,47 **(62,7)**	1,13 **(28,7)**

Valve Series	Air Actuator Type	Air Actuator Ordering Suffix	Air Pressure Required to Close Valve At: System Pressure ksi (bar)											Max. Pressure psi (bar)	Stem Travel in. (mm)	Flow Value Cv*
			1-3 (68-200)	4 (275)	6 (400)	8 (550)	10 (700)	12 (830)	14 (970)	16 (1100)	18 (1250)	20 (1400)	21 (1500)			
21V4	Medium Duty	**-YMNO**	40 (2,8)	40 (2,8)	40 (2,8)	40 (2,8)	50 (3,5)	60 (4,2)	70 (4,9)	80 (5,6)	85 (5,9)	95 (6,6)	100 (6,9)	21000 **(1500)**	0,25 (6,4)	0,31
	Heavy Duty	**-YHNO**	20 (1,4)	20 (1,4)	20 (1,4)	20 (1,4)	25 (1,7)	30 (2,1)	35 (2,4)	40 (2,8)	45 (3,1)	50 (3,5)	55 (3,8)			
21V6	Medium Duty	**-YMNO**	45 (3,1)	45 (3,1)	45 (3,1)	45 (3,1)	55 (3,8)	65 (4,5)	75 (5,2)	85 (5,9)	95 (6,6)	100 (6,9)		20000 **(1400)**	0,25 (6,4)	0,75
	Heavy Duty	**-YHNO**	25 (1,7)	25 (1,7)	25 (1,7)	25 (1,7)	30 (2,1)	35 (2,4)	40 (2,8)	45 (3,1)	50 (3,5)	55 (3,8)	60 (4,2)	21000 **(1500)**		
21V9	Medium Duty	**-YMNO**	60 (4,2)	60 (4,2)	65 (4,5)	80 (5,6)	100 (6,9)							10700 **(700)**	0,38 (9,7)	1,30
	Heavy Duty	**-YHNO**	30 (2,1)	30 (2,1)	30 (2,1)	40 (2,8)	50 (3,5)	55 (3,8)	60 (4,2)	70 (4,9)	80 (5,6)	85 (5,9)	90 (6,2)	21000 **(1500)**		
21V12	Medium Duty	**-YMNO**	80 (5,6)	80 (5,6)	100 (6,9)									6100 **(400)**	0,44 (11,2)	2,50
	Heavy Duty	**-YMNO**	40 (2,8)	40 (2,8)	50 (3,5)	60 (4,2)	75 (5,2)	90 (6,2)	100 (6,9)					13600 **(970)**		
21V16	Medium Duty	**-YMNO**	100 (6,9)	100 (6,9)										3900 **(275)**	0,56 (14,2)	3,40
	Heavy Duty	**-YHNO**	50 (3,5)	50 (3,5)	70 (4,9)	100 (6,9)								8800 **(550)**		
			1-12 (68-830)	14 (970)	16 (1100)	18 (1250)	20 (1400)	22 (1500)	24 (1650)	26 (1800)	28 (1900)	30 (2000)	36 (2500)			
36V4	Medium Duty	**-YMNO**	25 (1,7)	25 (1,7)	30 (2,1)	35 (2,4)	35 (2,4)	40 (2,8)	45 (3,1)	50 (3,5)	50 (3,5)	55 (3,8)	65 (4,5)	36000 **(2500)**	0,19 (4,8)	0,12
	Heavy Duty	**-YHNO**	15 (1)	15 (1)	15 (1)	20 (1,4)	20 (1,4)	20 (1,4)	25 (1,7)	25 (1,7)	25 (1,7)	30 (2,1)	35 (2,4)			
36V6 & 36V9	Medium Duty	**-YMNO**	30 (2,1)	35 (2,4)	40 (2,8)	45 (3,1)	50 (3,5)	55 (3,8)	60 (4,2)	65 (4,5)	70 (4,9)	72 (5,)	**85** (5,9)			0,23
	Heavy Duty	**-YHNO**	15 (1)	20 (1,4)	20 (1,4)	25 (1,7)	25 (1,7)	30 (2,1)	30 (2,1)	35 (2,4)	35 (2,4)	40 (2,8)	50 (3,5)			0,33
			1-15 (68-1050)	20 (1400)	25 (1800)	30 (2000)	35 (2400)	40 (2800)	45 (3100)	50 (3500)	55 (3800)	60 (4100)	65 (4500)			
65V4 & 65V6	Medium Duty	**-YMNO**	30 (2,1)	30 (2,1)	30 (2,1)	35 (2,4)	45 (3,1)	50 (3,5)	55 (3,8)	60 (4,2)	70 (4,9)	75 (5,2)	80 (5,6)	65000 **(4500)**	0,25 (6,4)	0,08
	Heavy Duty	**-YHNO**	15 (1)	15 (1)	15 (1)	20 (1,4)	25 (1,7)	25 (1,7)	30 (2,1)	30 (2,1)	35 (2,4)	40 (2,8)	**45** (3,1)			0,09
65V9	Medium Duty	**-YMNO**	35 (2,4)	35 (2,4)	40 (2,8)	50 (3,5)	55 (3,8)	65 (4,5)	70 (4,9)	75 (5,2)	85 (5,9)	90 (6,2)	95 (6,6)			0,14
	Heavy Duty	**-YHNO**	20 (1,4)	20 (1,4)	20 (1,4)	25 (1,7)	30 (2,1)	35 (2,4)	35 (2,4)	40 (2,8)	45 (3,1)	45 (3,1)	50 (3,5)			
			1-10 (68-680)	20 (1400)	30 (2000)	40 (2800)	50 (3500)	60 (4100)	70 (4800)	80 (5500)	90 (6200)	101 (7000)				
101V5	Medium Duty	**-YMNO**	50 (3,5)	50 (3,5)	50 (3,5)	50 (3,5)	55 (3,8)	65 (4,5)	75 (5,2)	85 (5,9)	95 (6,6)	**100** (6,9)		101000 **(7000)**	0,12 (3)	0,09
	Heavy Duty	**-YHNO**	30 (2,1)	30 (2,1)	30 (2,1)	30 (2,1)	30 (2,1)	35 (2,4)	40 (2,8)	40 (2,8)	45 (3,1)	**50** (3,5)				

* Cv values are for straight pattern valves, increase this value by 50% for angle pattern valves.

All general terms and conditions of sale, including limitations of our liability, apply to all products and services sold.