CERTIFIED
InterSystems
Omaha, NE

REVISIONS 541007-1			
REV	DATE	DESCRIPTION	BY
A	5/00	UPDATED WIRING	TS

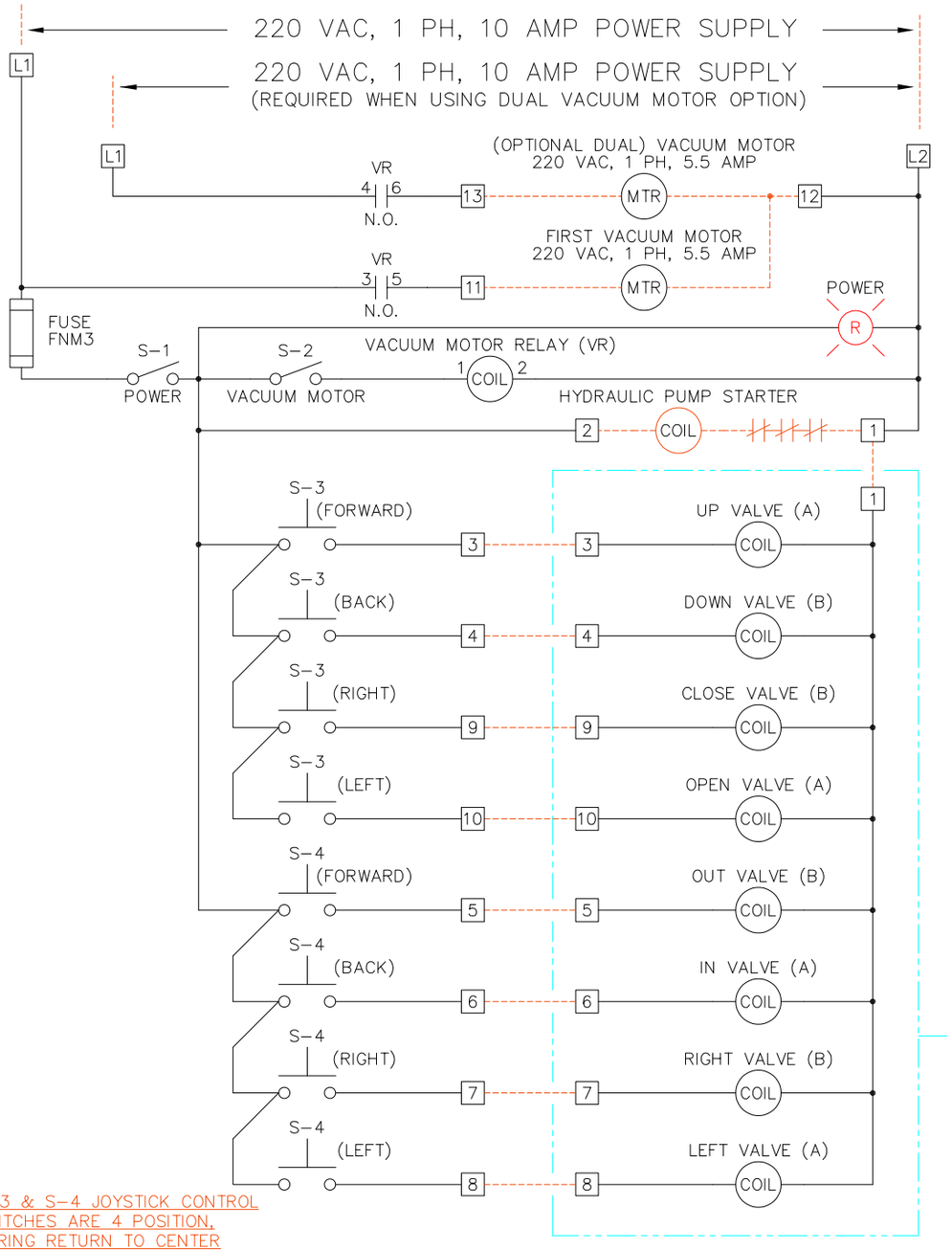

CONTROL WIRING SCHEMATIC

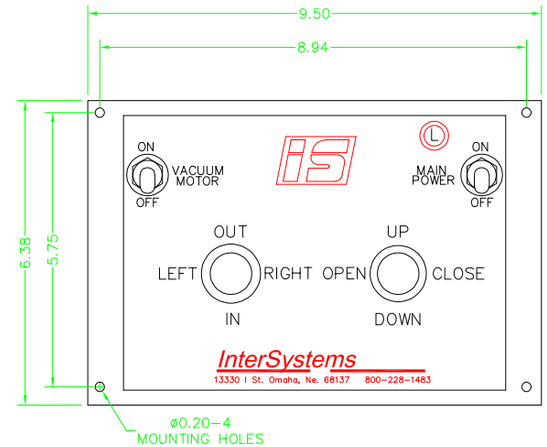

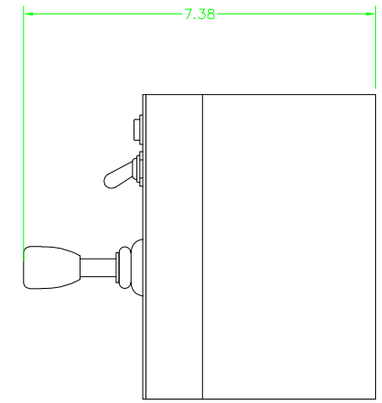

NEMA 12 ENCLOSURE DETAIL

–	1	CRIMP-ON CONNECTOR .25	–	–
–	1	CRIMP-ON CONNECTOR .11	–	–
–	1	RUBBER BOOT SWITCH COVER	–	–
–	1	3 AMP FUSE	–	–
–	1	JOYSTICK SWITCH BLOCK	–	–
–	1	SPST TOGGLE SWITCH	–	–
–	1	DPDT TOGGLE SWITCH	–	–
SPARE PARTS KIT INCLUDED				

NOTES:
SAFETY LOCKS AND ALL CONNECTIONS SHALL BE IN ACCORDANCE WITH YOUR LOCAL, STATE AND NATIONAL ELECTRICAL CODE REQUIREMENTS AND ARE THE RESPONSIBILITY OF THE INSTALLATION ELECTRICAN

——— FACTORY WIRING
- - - - FIELD WIRING

BUBBLE NO.	QTY	DESCRIPTION or MATERIAL AND SIZE	ITEM NUMBER	TOTAL UNITS

BILL OF MATERIALS Mar 3 25 4:52p

TYPE M
SOURCE P
U/M EA
PRODUCT CODE PUR
FAMILY CODE BA

CUSTOMER –
CUSTOMER P.O. –
ORDER NO. –

TOLERANCES
MANUFACTURED TO TYPICAL SHOP TOLERANCES UNLESS OTHERWISE SPECIFIED

QTY REQ'D

GSI INTERSYSTEMS

THIRD ANGLE PROJECTION

DESCRIPTION
CONTROL TP & STP JS N12 220V

This drawing is the property of Intersystems Inc. The information herein is not to be used except as authorized by this company. Tracings or copies are not to be made without permission.

D'WN BY	TS	DATE	10/99	ITEM NUMBER/DRAWING NUMBER	REV.
CK'D BY				541007	A
SCALE	1	DRAWING SIZE	L2	ACAD FILE 541007-1	
				SHEET 1 OF 2	

UOGLOS