REV.	DESCRIPTION	DATE	BY
			RDJ

TOLERANCES AND MACHINED FINISHES UNLESS OTHERWISE SPECIFIED:

FRACTIONS OR TWO DECIMAL PLACES	± .010
THREE DECIMAL PLACES	± .005
FOUR DECIMAL PLACES	± .0005
ANGLES	± 0.5°

FILLETS .020 RAD.
BREAK SHARP CORNERS .010
REMOVE BURRS
MACHINED SURFACES 125 RMS OR BETTER
DIMENSIONS ARE IN INCHES

THIS DRAWING IS THE PROPERTY OF EFDYN MOTION MANAGEMENT WHO CLAIMS PROPRIETARY RIGHTS IN THE MATERIAL DISCLOSED. IT IS ISSUED IN CONFIDENCE FOR ENGINEERING INFORMATION ONLY AND MAY NOT BE COPIED OR USED FOR MANUFACTURE OF ANYTHING SHOWN WITHOUT SPECIFIC WRITTEN PERMISSION FROM EFDYN MOTION MANAGEMENT

COPYRIGHT RESERVED 2008

Installation Drawing
EFMA 20-50-2C

EFDYN MOTION MANAGEMENT
7734 E. 11th STREET PH. (918) 838-1170
TULSA, OK 74112 FAX (918) 835-3334

DRAWN BY	RDJ	DATE	11/11/2021
CHECKED BY		DATE	
APPROVED BY		DATE	
REV.	SIZE: A	JOB:	

5-6648-0-00

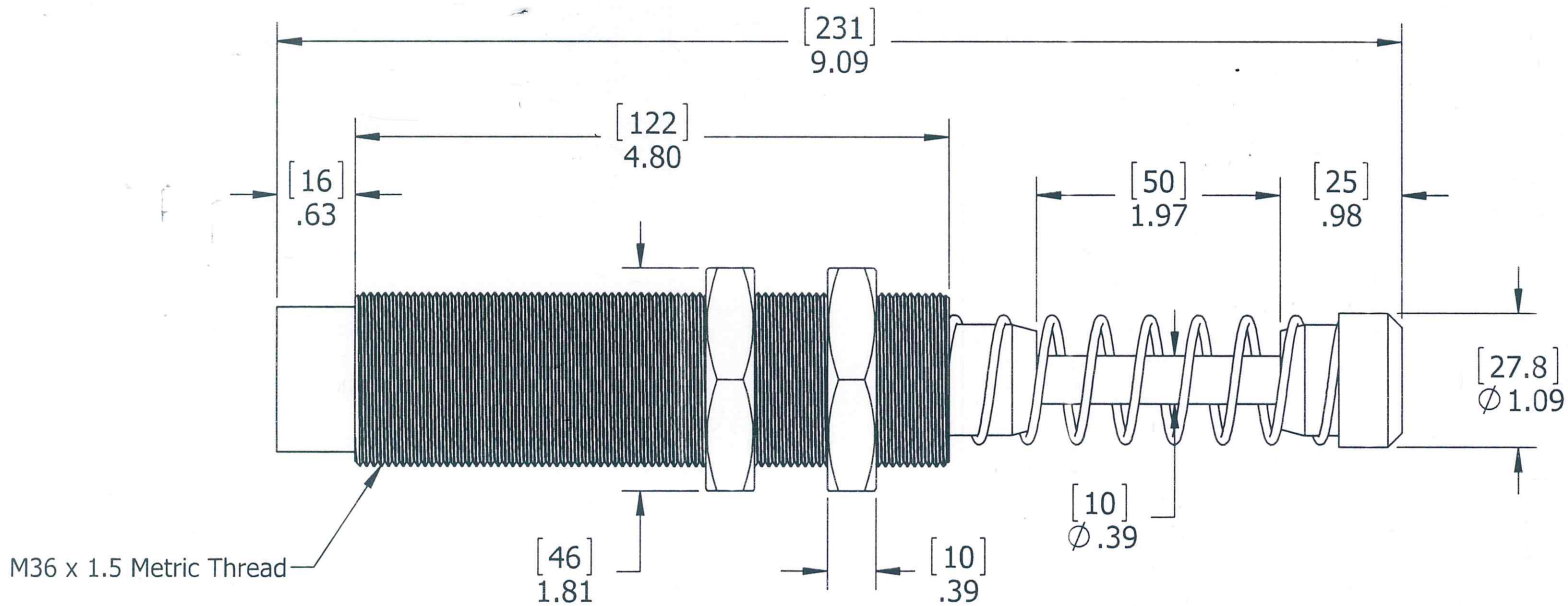

PERFORMANCE CHARACTERISTICS

Stroke:	1.97 in
Max. Energy per Cycle:	350 Nm (3,097 in-lbs)
Energy per Hour:	130,000 Nm/hr (1,150,596 in-lbs/hr)
Max. Effective Weight:	5600 kg (12,342 lbs)
Max. Impact Speed:	4 m/s (13.1 ft/sec)
Weight:	2.09 lbs

NOTE:
This part replaces the EFM 20-50-2C, effective November 2021

PN: 960-0006-3