Allgemeintoleranz nach ISO 2768 - mH - E		Zeichnung unterliegt dem Änderungsdienst!		
0,5 - 6	+/- 0.1	Verteiler	Transp.	Pause
6 - 30	+/- 0.2	EWH-tq		
30 - 120	+/- 0.3	ESPO s.r.o.	X	
120 - 400	+/- 0.5			
400 - 1000	+/- 0.8			

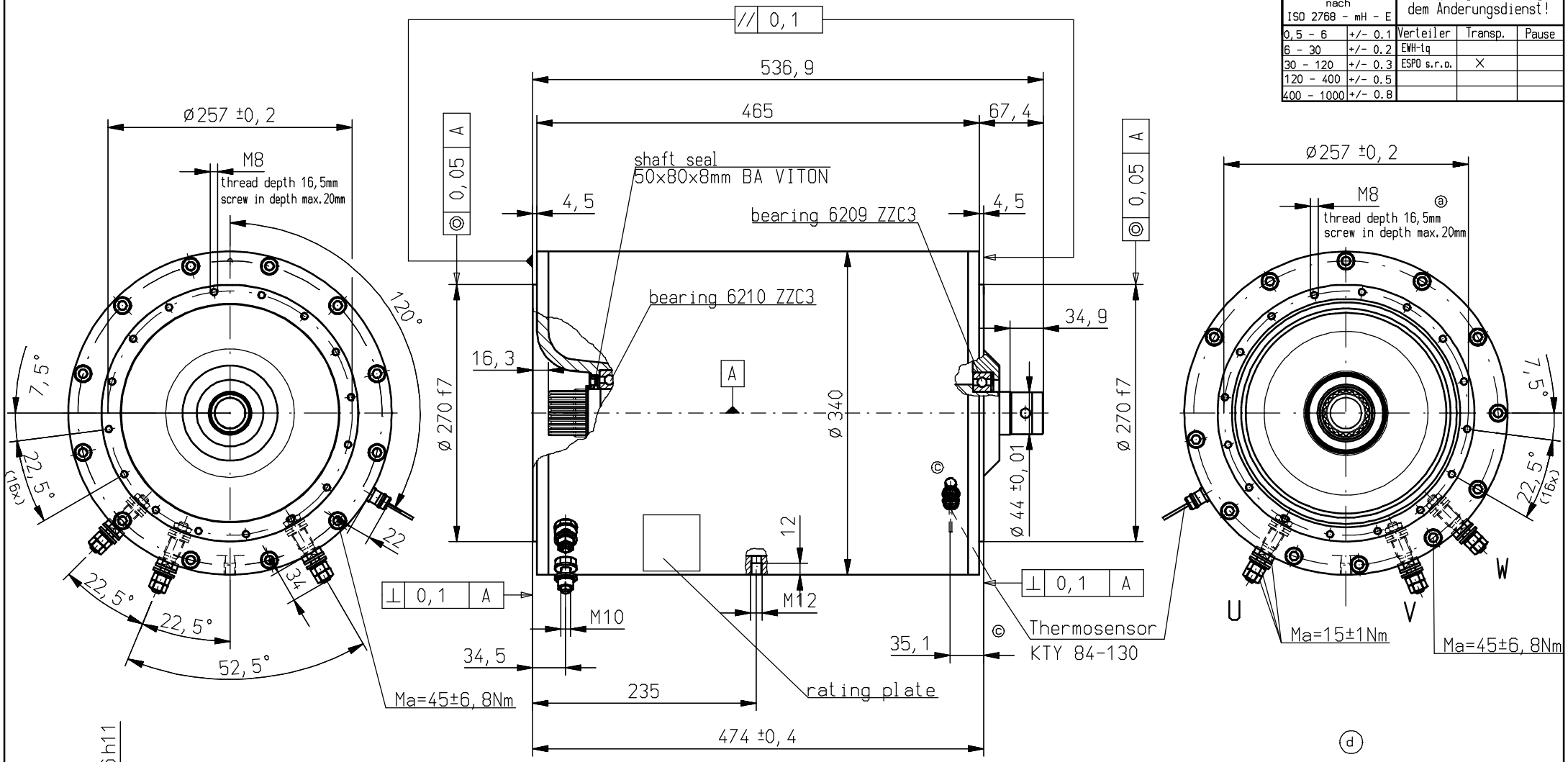

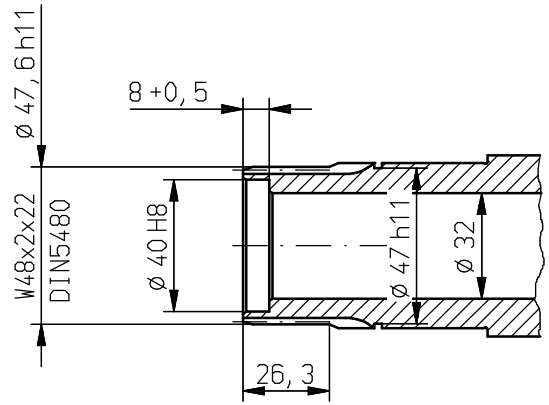

date of issue
12.05.2015

ONLY AS A INFORMATION
Copy is not subject to revision service

Scale:	/	EW HOF Antriebe u. Systeme GmbH	Date/Name	02.03.12 Ha
Page:	Page Nr:		Checked	02.03.12 Ro
Revision	Date	Benennung DIMENSION SHEET mounting B14sp.	PMP Ident-Nr.	MOT.0067 (d)
a 14960	23.07.12			
b 15624	07.11.13			
c 15736	11.02.14	Used for / Client	Drawing-Nr.:	M 2.1307
d 15740	12.02.14	Type DK 200.4/S1192 / S 1192		
e 16308	11.05.15	splined shaft	Part-Nr.:	836 851-00 (d)
		m. 2.shaft end	Replacement for:	PMP-Zg.-Nr.70010848
DIN ISO 2768 - m			Replaced by	

Graphic Representation without Obligation! Modifications of the Proportions with Reservation!
Pay attention : protection-note acc. to DIN 34 A pass on this drawing is not allowed without our written licence.

12.05.2015