REOVIB

Control units for vibratory conveyor technology

MFS 368

Frequency converter for vibratory feeders

UL / CSA - Version

c UL us LISTED

MFS368-UL_ANL_rev01.en.doc
26.04.2024

Table of contents

Safety instructions for the user ... 3
Declaration of Conformity ... 6
Changes / Copyright ... 6
1.0 General ... 7
2.0 Function ... 7
2.1 Track control ... 8
2.2 Operation with two speeds (2nd setpoint for coarse/fine switching) ... 8
2.3 Control inputs and outputs ... 9
2.3.1 Enable input ... 9
2.3.2 Sensor input for track control ... 9
2.3.3 External setpoint ... 9
2.3.4 Control output status relay ... 9
2.3.5 Control output 24 VDC Timeout (IP54) ... 9
2.3.6 Ready relay ... 9
2.3.7 Control output 24 VDC Valve (IP54) ... 9
2.3.8 Thermal switch ... 9
2.4 Touch panel ... 10
3.0 Structure ... 11
3.1 IP54 ... 11
3.2 IP20 ... 11
4.0 Technical data ... 11
4.1 Load supply requirements ... 12
4.2 Terminal details ... 12
4.3 Temperature of protective housing ... 12
4.4 Coolant type ... 12
4.5 Current consumption ... 12
4.6 Warning signs ... 12
5.0 Ordering code (Standard units) ... 13
6.0 Possible settings ... 14
7.0 Operating elements ... 16
7.1 Setting behaviour ... 16
7.1.1 Parameter setting example ... 17
7.1.2 External setpoint example ... 17
8.0 Commissioning ... 18
8.1 Preparatory measures ... 18
8.2 Operating frequency of the feeder coils ... 18
8.3 Measurement of output voltage and output current ... 18
9.0 Settings ... 19
9.1 Notes on controller mode ... 19
9.2 Mounting the accelerometer ... 19
9.3 Correlation between acceleration and vibration amplitude ... 21
9.4 Determining the resonant frequency ... 21
9.5 Commissioning the control unit in control mode ... 22
10.0 Troubleshooting ... 23
11.0 Housing version connection ... 24
12.0 Connection of control cabinet version ... 25
13.0 Dimension drawing ... 27
14.0 Assembly instruction ... 30
A 1.0 Accessories / Options ... 31

Safety instructions for the user

IMPORTANT!
READ CAREFULLY BEFORE USE AND KEEP FOR FUTURE REFERENCE!

This description contains the information required for correct use of the products described in it. It is intended for technically qualified personnel.

Qualified personnel are persons who, because of their training, experience and instruction, as well as their knowledge of applicable standards, regulations, health and safety requirements and operating conditions, have been authorized by those responsible for the safety of the equipment to carry out required activities at any time, and who can recognize and avoid possible hazards in the course of these activities (definition of qualified employees according to IEC 364).

General safety instructions

The following instructions are provided for the personal safety of operating staff and also for the safety of the products described and connected equipment.

WARNUNG

Hazardous voltage

Non-observance can result in serious or fatal injury as well as material damage.

- Isolate from the mains before installation or dismantling work, as well for post-installation modifications.
- Observe the accident prevention and safety rules applicable for the specific application
- Before putting into operation, check if the rated voltage for the unit conforms with the local mains supply voltage.

WARNING!

Electric shock in the absence of earthing

If the protective earth connection of devices with protection class I is missing or incorrectly executed, high voltages may be applied to exposed parts and the housing which, if touched, can result in serious or fatal injury.

- Ground the unit correctly.

WARNING

Electric shock in case of damaged equipment

Improper handling may result in damage to equipment. If units are damaged, dangerous voltages may be present on the housing or on exposed components which, if touched, can result in serious or fatal injury.

- During transport, storage and operation, observe the limit values specified in the technical data.
- Do not use damaged equipment.

WARNING

Electric shock if the cable shield is not connected

Capacitive coupling can cause life-threatening touch voltages if the cable shields are not connected.

- Connect cable shields and unused cores of power lines to earthed housing potential on at least one side.

WARNING

Arcing when disconnecting a plug connection during operation

Disconnecting a plug connection during operation can cause an electric arc, which can result in serious or fatal injury.

- Only open plug connections when they are de-energised.

WARNING

Before opening the housing, disconnect from mains

Before any intervention in the unit, allow at least 5 minutes for the capacitors to discharge.

WARNING

Injury due to hot surfaces

In case of malfunction, overload and insufficient ventilation, contact with a hot surface may cause skin burns. With the 6A and 8A versions, the heat sink temperature can reach 70 °C during operation.

WARNING

Material damage due to incorrect output voltage

Independent of the input voltage, the frequency converter's output voltage is 205 VAC when delivered. When using 110 VAC feeder coils, the output voltage must be set with parameter: "Umax", otherwise the feeder coil may be damaged.

WARNING

Improper assembly of parts

Unsuitable assembly tools, screwing methods, or non-observance of the assembly instructions can lead to falling parts or equipment.

WARNING

Influence of electromagnetic fields on active implants

Frequency converters generate electromagnetic fields (EMF) during operation. Electromagnetic fields can affect active implants, e.g. pacemakers. This puts people with active implants in the immediate vicinity of an frequency converter at risk.

- As the operator of an EMF-emitting installation, assess the individual risk to persons with active implants.

WARNING

Total failure of power supply

Interrupting and restoring the power supply to the control unit can lead to hazardous situations. In particular, once the power supply has been restored, the system can restart without additional enabling.

WARNING

Unintentional or accidental breach of safety

An unintentional or accidental change of the unit's parameters can disable the protective functions of the control unit.

WARNING

Unrecognised dangers due to missing or illegible warning signs

Missing or illegible warning signs can lead to hazards going unrecognised. Unrecognised hazards can result in accidents with serious or fatal injury. See Chapter 4.6 "Warning signs". Missing signs must be replaced.

CAUTION

Equipment damage due to unsuitable screwing tools

Unsuitable screwing tools or unsuitable screwing methods can damage the screws of the unit.

- Use screw drives that exactly match the screw head.
- Tighten the screws with the torques specified in the technical documentation.

CAUTION

Material damage due to loose power connections

Insufficient tightening torques or vibrations can lead to loose power connections. This may cause fire damage, defects in the unit or malfunctions.

- Tighten all power connections to the prescribed tightening torques.
- Check all power connections at regular intervals, especially after transport.

NOTE
Current consumption The current specified in the technical data is the maximum permissible value for the unit over the entire input voltage range. A higher current than specified can lead to malfunctions and failure. See also chapter 4.5 "Current consumption".

Intended use

The units described here are classed as electrical equipment for use in industrial plants.
They are designed for controlling vibratory feeders.

The housing version (IP54) is not suitable for installation in control cabinets.
Failure to maintain the ambient temperature may result in a shortened life span.

Please mount the units on a vibration-free surface.

Declaration of Conformity

We declare that these products conform with the following standards:

Guideline:		**Standard:**
2014/30/EU	**EMC**	**EN 61000-6-4:2007 +A1:2011; EN 61000-6-2:2019**
2014/35/EU	**LVD**	**EN 62477-1:2012 +A11:2014 +A1:2017**
2011/65/EU	**RoHs**	

REO AG, D-42657 Solingen

For use in NFPA 79 Applications only **E217179**

Adapters providing field wiring means are available from REO AG.
Refer to REO AG.

Changes / Copyright

We reserve the right to make changes to the technical design and documentation without prior notice.
REO AG reserves the copyright to these instructions. Reproduction, computerisation and filming of any kind is not permitted without written consent.

1.0 General

The control unit generates an adjustable output frequency for the vibratory feeder independently of the mains frequency. The PFC circuit on the input side ensures a constant output voltage both at an input voltage of 110 V and 230 V.
Mains voltage fluctuations have no influence on the feed rate. In addition, the operating mode “Amplitude control" combined with an accelerometer enables a constant feed rate even with changing feeder loads. In this operating mode, the feeder's resonant frequency can also be determined and the output frequency for the feeder continuously tracked.
An integrated track control enables a backlog circuit to be set up for material control via a PNP distance sensor.
For the operation of a blowing air valve, a 24 VDC output is available in the IP54 housing version.

The unit is operated via an LC display and programming buttons. All the settings can be done using this display without opening the housing.

Special features:

- Output voltage up to 205 VAC, independent of mains supply.
- Mains frequency independent, adjustable output frequency
- Min and max limits of the frequency range adjustable
- Adjustable current limit for maximum coil current
- Constant feed rate in the event of mains fluctuations
- Control of the resonant frequency
- Status relay On / Off
- Ready relay (IP20 only)
- Track control
- 24 VDC Output for e.g. air valve (IP54 only)
- Four application-specific parameter sets can be stored
- With option "Interface operation via field bus"
- Thermal switch input for coil temperature monitoring

Housing version

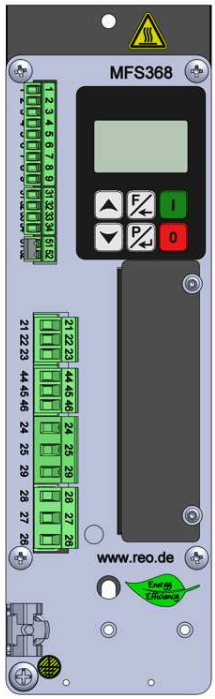

Control cabinet version

2.0 Function

The controller generates an adjustable output voltage with an adjustable output frequency that is independent of the mains supply. The input-side PFC circuit ensures a constant output voltage at an input voltage of 99 V to 264 V. The output voltage is changed to control the feed rate. The output can be switched on or off via the keyboard or an enable input by a higher-level external control unit. After switching on the unit, the output is ramped up over an adjustable time ramp (soft start) or ramped down after switching off (soft stop). The unit can be operated in a manual mode at constant output frequency or in controller mode with amplitude control and frequency control. For controller mode an acceleration sensor e.g. SW10 is required, which is mounted on the vibrating part of the feeder. This sensor detects the feeder's vibration movement and reports this actual value back to the internal controller. In this operating mode, in addition to the amplitude control, the feeder's resonant frequency is determined and adjusted accordingly with different loads, so that a constant flow of parts results with an optimum vibrating frequency of the feeder. The setpoint for the feed rate is specified as standard via the internal display but can also be supplied externally by means of a 0...10 V or 0/4...20 mA DC signal. For feed rate control, an integrated track control allows the realisation of a material flow control. This function requires an external 24 V PNP distance sensor to detect the conveyed parts. This creates a defined material flow via adjustable time stages for switch-on and switch-off delay. The "time out" function can be used to monitor

whether parts pass the sensor within a period of time (e.g. no-load signal). As an alternative to the material flow control, the sensor input can be used for switching to a second, internally adjustable setpoint, e.g. to realise a "fast/slow" function. In parallel with control of the feeder, a 24 V DC output is available for the IP54 housing version, which can control a blowing air valve to support the parts flow. This output can switch on before the feeder starts and switch off with a time delay after the feeder has switched off. The time delays are adjustable. Depending on the conveyor, the nominal unit current can be set between 5% and 100%. If the current limit is reached, the output voltage is reduced so that the current limit is not exceeded. Sensitive settings such as current limit and frequency limits are combined in a limit menu. Settings in the menu can only be made after enabling the key number in the "Service menu". In the service menu, the current settings can also be saved and the factory settings of the units can be restored.

2.1 Track control

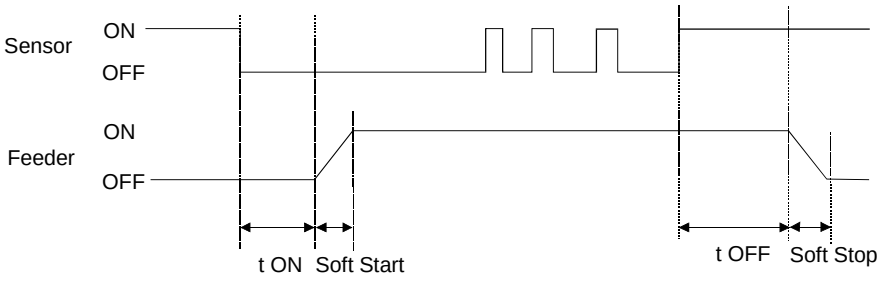

Via internal, adjustable time steps ("t on" and "t off"), the output is switched ON or OFF depending on the material level measured via a track component sensor. The level of the conveyed material thus varies around the position of the track component sensor installed on the feeder. The output of the control unit is switched on when the conveyed material falls below the sensor and the set switch-on time delay has elapsed. If the conveyed material exceeds the position of the sensor, the control unit's output is switched off after expiry of the switch-off delay (indication in the display: "⚠ full"). Gaps in the flow of conveyed material reset the time stages. The times are always determined by the last or first conveyed part.

The switch-on or switch-off delay time is set in the programming menu. The run-down of the internal time stages is shown by the clock 🕒 in the display.

When the feeder is switched on, a further time stage **"sensor timeout"** can be started, which switches the feeder off after an adjustable time (1...240 sec.) if no material parts have passed the sensor within this time. When the feeder is switched off, the status relay also switches off. The display then shows "Track Timeout and Info 0001" flashing alternately. This function is optional and must be activated in the track control menu with function "Timeout On" = ☑.

2.2 Operation with two speeds (2nd setpoint for coarse/fine switching)

Instead of track control, coarse/fine operation can also be used. Switching to the second setpoint is done via the sensor input that is otherwise used for track control. Switching can be done with a contact or an external 24 VDC signal voltage. If a 24 V signal is present, the system switches to the second setpoint "Fine" without any time delay.

(The track control function is not available.)

2.3 Control inputs and outputs

2.3.1 Enable input

Potential-free contact or 24 VDC signal.
External control option for switching the power output On/Off, e.g. for linking several units or control by a PLC.

2.3.2 Sensor input for track control

Sensor for monitoring the material level in a backlog section or input for switching to a second setpoint.
24 VDC (PNP).

2.3.3 External setpoint

The feeder amplitude set point can be provided from and external, analogue reference value 0...10 VDC, 0/4...20 mA. The parameter "External setpoint" must be activated in the “Feeder" menu, for an external setpoint source to be used.
Adjust the desired minimum value using the "arrow keys". Switch only now to the external setpoint. The adjusted value remains at setpoint "0" as a minimum.

2.3.4 Control output status relay

Relay contact 250 V (changeover contact (IP20))
Relay contact 24 V (normally open contact (IP54))
The relay is energised while the feeder is running, and is de-energised if there is no enable signal or fault message.

2.3.5 Control output 24 VDC Timeout (IP54)

The "Timeout" message is active if no material is detected by the sensor after the set time. (Adjustable with parameter “Timeout On")

2.3.6 Ready relay

Relay contact 250 V (changeover contact). If an error occurs (e.g. overload error), or if the current limit is reached, contact 44,45 opens. (Only for IP20)

2.3.7 Control output 24 VDC Valve (IP54)

Output for a blowing air valve.
"On" with feeder start, "Off" 4 sec. after feeder stop (factory setting).
Switch-off and switch-on times can be adjusted with the parameters "Air lead time" and "Air delay time".

2.3.8 Thermal switch

The frequency converter has a special input for the connection of a thermal switch, which can be attached to the magnet by the user. This can effectively protect the conveyor system from overheating.

2.4 Touch panel

The units are operated via the operating keys and the text/graphic display.

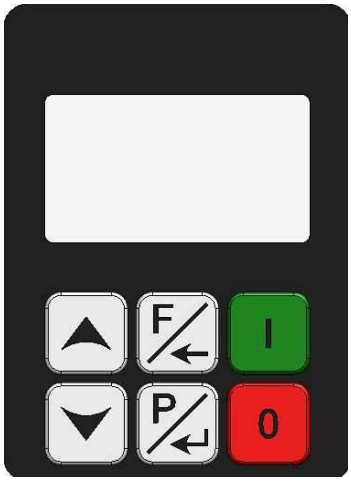

Operating display

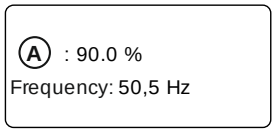

Status line
Conveyor setpoint
Frequency conveyor

Start / Reset

Stop

Symbols "Function"

- Conveying capacity
- Feeder
- Locked (no enable)
- Track Ctrl.
- Limits
- Information
- Language
- Time out

Symbols of the status line

- Stop-Button
- „Busy“ on storage
- Key set
- Service enabled
- Mains undervoltage

Key	Function for menu navigation	Function for changing values
Arrow keys	Select menu item	Change values
F key	One menu level back	Abort during value entry
P key	Open sub-menu	Apply value

3.0 Structure

The unit is available as IP54 or IP 20 version.

3.1 IP54

- Power switch
- Control and display panel
- Mains supply lead (optional)
- Output cable or output socket for feeder connection
- Sensor sockets. 24 VDC sensors with PNP output are provided.

3.2 IP20

Fixing points for attachment to a mounting plate.
Electrical connection on external terminals.

4.0 Technical data

Protection type	IP54	IP20
Protection class	I	
Supply voltage	99…264 VAC	
Max. permissible input current*1 (Important information in Chapter 4.5)	I_n: 2 A	
Input frequency	50 / 60 Hz	
Inrush current	Î= 9 A, 20 ms	
Power loss	max. 55 W	
Output voltage	0... 205 V +/- 5%	
Output current	3 / 6 / 8 A +/- 5%	
Output frequency*2	20…140 Hz	
Recommended automatic circuit breaker	6 A B/C	
RCD	Type "B".	
Mains system	TN system	
Rated short-time withstand current (I_{cw})	<10 kA	
Rated short-circuit current (I_{cc})	<10 kA	
Enable input	Contact / 24 VDC	
Analogue setpoint	0...+10 VDC, 0/4…20 mA	
Air valve output	24 V, 100 mA, DC	-/-
Timeout output		
Backlog sensor	24 V, PNP (100 mA, DC)	
Status relay (On/Off)*3	Make contact (24 V, 1 A)	Changeover contact (250 V, 1 A)
Ready relay (fault)	-/-	
Operating temperature	0...+40 °C	
Storage temperature	-10...+65 °C	
Rel. humidity (storage)	10...95 % RH without condensate	
Weight	approx. 2.7 kg	approx. 2.3 kg

***1Important information in Chapter 4.5 "Current consumption".**
Non-observance can lead to malfunction and failure.
***2Other frequencies on request.**
***3The connections of status and ready relays cl. 21-23 and cl. 44-46 must not be combined with different mains classes. Both relay contacts may only be used with signals of the same mains class.**

4.1 Load supply requirements

The unit is not suitable for feeder coils with a power of <18 VA (100 mA).

4.2 Terminal details

Tightening torque:

Terminals MSTB/GMSTB, GMSTB-GIC:	0.5-0.6 Nm	Connections: 21-29 and 44-46
MC terminals:	0.22-0.25 Nm	Connections: 1-9, 31-34 and 51-52

4.3 Temperature of protective housing

Only suitable for mounting on concrete or other **non-combustible** surfaces.

4.4 Coolant type

Free convection.

4.5 Current consumption

The current consumption specified in the technical data is the maximum permissible value for the unit. A higher current consumption than specified can lead to malfunctions and failure. Please note that the input current is inversely proportional to the input voltage. When the input voltage is high, the input current is low and when the input voltage is low, the input current is high.

Example:
A 230 V vibratory feeder is operated on a 230 V mains supply using the MFS368. A current of 1 A is detected at the input of the controller. The same 230 V vibratory feeder is then operated on a 110 V mains supply. The input voltage is only half as high as before and the input current is therefore twice as high. This means that the input current of the controller on the 110 V mains supply is then 2 A.

NOTE: When dimensioning, especially for international markets, ensure that the maximum specified input current is not exceeded at the lowest expected supply voltage.

4.6 Warning signs

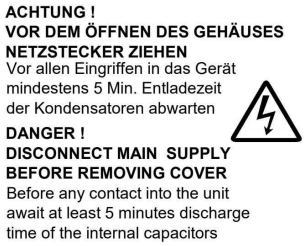

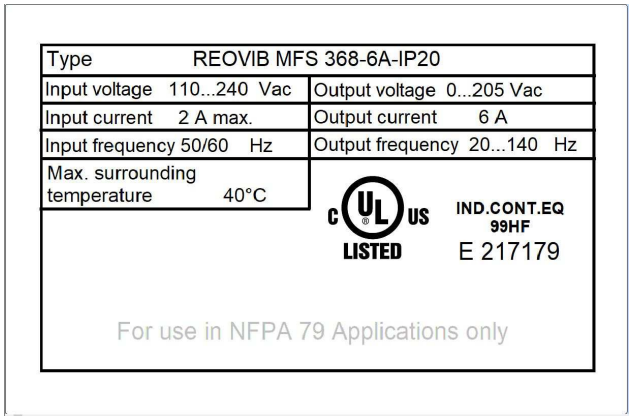

Warning sign "Warning of too hot surface" must be visibly attached to the heat sink.

5.0 Ordering code (Standard units)

1 0 200 6368 2 1 2 1

0= ---
1= EC
2= E I/P
3= PN
4= DP
5= CAN
6= DN

1= 3 A
2= 6 A
3= 8 A

1= IP20 V UL
9= IP54 PV UL

1= IP20 Basic
2= IP20 Series
4= IP54 Basic
5= IP54 Series

Interfaces:
--- = without
EC = EtherCat
E I/P = EtherNet
PN = ProfiNet
DP = ProfiBus
CAN = CAN-Bus
DN = DeviceNet

V = Vertical design
H = Horizontal design
PV = Plug & Vib

Control connections:
-Track control sensor
- Status relay
- Ready relay
- Enable input
- External setpoint 0...10 V, 0/4...20 mA
- Amplitude sensor
- Thermal switch (Series)

The following control connections are <u>internally</u> included in all versions (IP54):
- Thermal switch (Series)
- External setpoint input: 0...10 V, 0/4...20 mA

6.0 Possible settings

No.	Icon	Menu item	Meaning	Setting	Factory setting
1		**Output**			
1.1		Feeder	Feed rate	0...100%	0%
1.1.1		Fine	Setpoint "Fine" (previously "Activate coarse / fine")	0...100%	0%
2		**Feeder**			
2.1		Frequency	Set frequency	35...140 Hz	100 Hz
2.2		Invert Enable	Invert Enable	☑/☐	switched Off
2.3		External setpoint	Activate external setpoint	☑/☐	switched Off
2.3.1		Setpoint	Setpoint type 0/2/1...10 V / 0/4...20 mA	0/2/1...10 V / 0/4...20 mA	0...10 V
2.4		Soft start	Set soft start time (setpoint 0...100 %)	0...60 sec.	1 sec.
2.5		Rundown	Set soft stop time (setpoint 100...0 %)	0...60 sec.	0.1 sec.
2.6		Max.	Limit maximum feed rate	0...100%	90%
2.7		Acc. controller	Activate Acc. controller (switch-off deactivates Auto. freq.)	☑/☐	switched Off
2.7.1		Prop. gain	Adjust P setting of Acc. controller	0.01...100	0.40
2.7.2		Integral	Adjust I portion of Acc. controller	0.01...100 sec.	0.15 sec.
2.7.3		Auto. freq.	Activate frequency search and frequency tracking (only if Acc. controller is activated)	☑/☐	switched Off
2.8		Air jet present*1	Activate air blow function	☑/☐	switched Off
2.8.1		Air lead time*1	Air blow lead time	0...60 sec.	0 sec.
2.8.2		Air delay time*1	Blowing air shut-off delay	0...60 sec.	4 sec.
2.9		Hopper cycle	Feeder output is cycled	☑/☐	switched Off
2.9.1		Time On	Hopper On time	0...60 sec.	15 sec.
2.9.2		Time Off	Hopper Off time	0...60 sec.	4 sec.
3		**Track control**			
3.1		Coarse / Fine	Coarse / Fine	☑/☐	switched Off
3.2		T-On	Switch-on time delay	0...60 sec.	5 sec.
3.3		T-Off	Switch-off time delay	0...60 sec.	5 sec.
3.4		Timeout On	Activate sensor timeout	☑/☐	switched Off
3.5		Timeout	Set sensor timeout time	1...240 sec.	180 sec.
3.6		Inv. sensor	Invert sensor	☑/☐	switched Off
4		**Limit values**			
4.1		Actual current	Actual current display	View only	
4.2		Current limit*3	Current limit	5...100%	100%
4.3		El. fuse*3	Output switch-off, instead of output current limitation	☑/☐	switched Off
4.4		Min. freq.*3	Set minimum frequency	20...140 Hz*2	35 Hz
4.5		Max. freq.*3	Set maximum frequency	20...140 Hz*2	140 Hz
4.6		Umax*3	Output voltage limiting 230 V coil -> Umax: 100% 115 V coil -> Umax: 50%	0...100%	100%
5		**Interface**			
5.1		Bus operation	Activate / deactivate bus mode	☑/☐	Switched Off*4
5.2		Bus address	Internal bus address (do not change)	1...16	1
5.3		Bit rate	Internal bus bit rate (do not change)	1 Mbit/s / 500 kbit/s	1 Mbit/s
5.4		Protocol	Interface protocol (do not change)	V1.i / V2.f	V1.i
6		**Info**			

6.1			Software version		
7		**Service**			
7.1		Clear ERROR & reset	Clear ERROR & reset	execute	
7.2		Factory settings*5	Load factory settings	execute	
7.3		Parameter set	Select parameter set	1 / 2 / 3 / 4	
7.4		Save parameters	Save current parameters in the selected parameter set (only if key no. 143 is activated)		
7.5		Load parameter set	Load and apply selected parameter set	execute	
7.6		Language	Select language	DE, EN	EN
7.7		Key	Enter key number	117 / 127 / 143	
7.8		Backlight	Backlight: Permanently On / Off / timeout	On/Off / 0...999 sec	
7.9		Display inverted	Invert display colours	☑/☐	switched Off

*1only available with the housing version
*2Other frequencies on request
*3These menu items are only displayed if key no. 127 is activated.
*4depending on unit type
*5After loading the factory settings, check the "UMax" parameter.

Key 117: Entry "Close" becomes visible. This can be used to hide/show various menus.
Key 137: "Lock" entry This can be used to hide/show additional menus.
Key 127: Entry "Service On" becomes visible. This makes further items visible in the service menu.
Key 143: Entry "Save parameters" becomes visible.

7.0 Operating elements

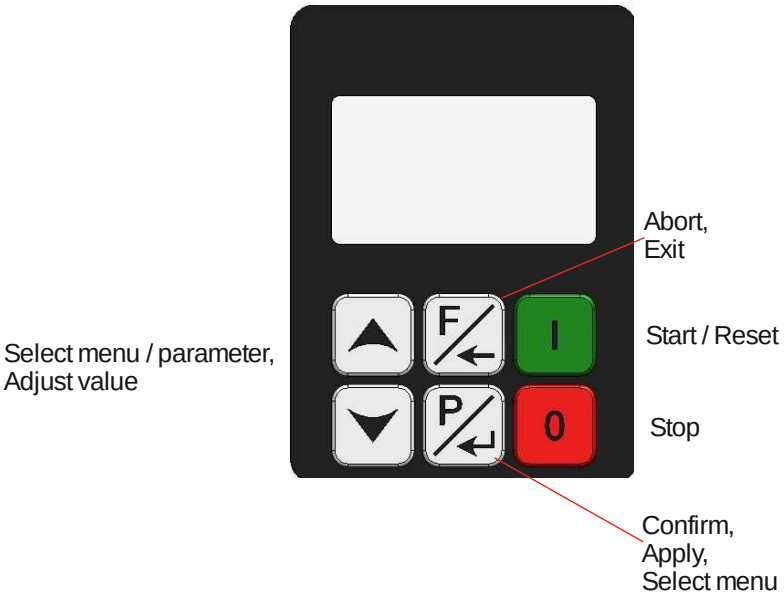

7.1 Setting behaviour

Start on the Homescreen

1. Jumping to the menu from the home screen
2. Navigate to the desired menu item
3. Select menu and open the submenu
4. Select parameter
5. Activate parameter entry (Editing mode)
6. Change parameter / Adjust value
7. End parameter input, the new value is saved
8. Back to previous menu

Use shortcut menu
Start on the Homescreen

1. Leads to the shortcut menu (to the setpoint parameter)
2. Activate parameter entry (Editing mode)
3. Adjust parameters (Setpoint)
4. End parameter input
5. Back to Homescreen

7.1.1 Parameter setting example

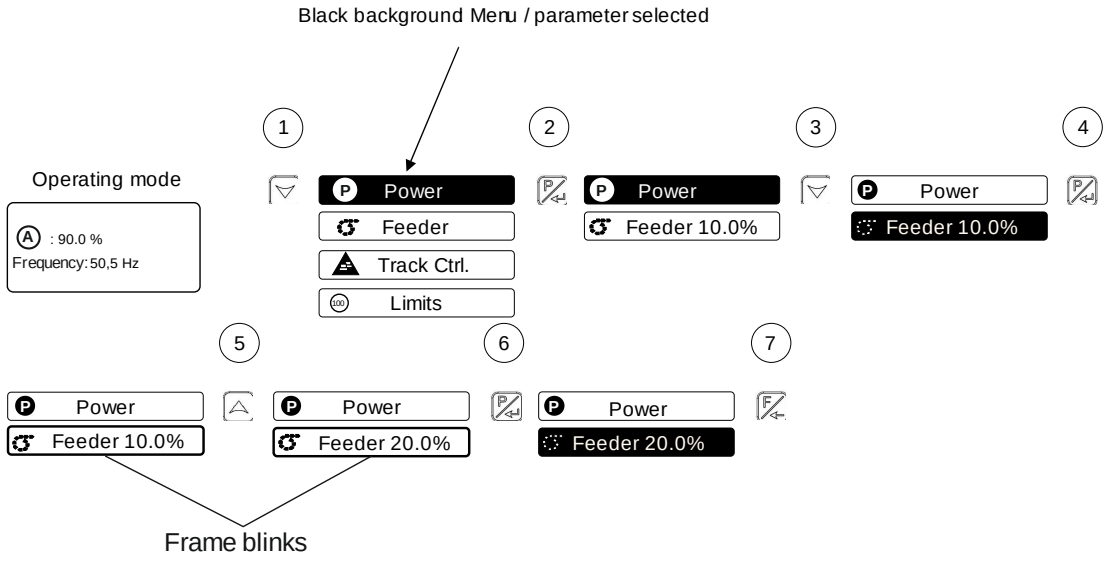

7.1.2 External setpoint example

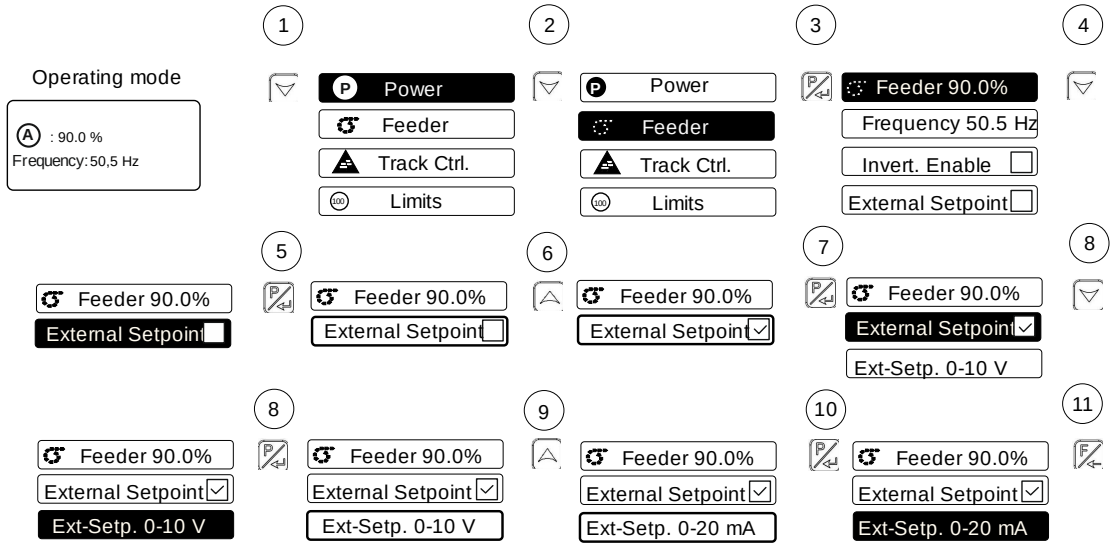

8.0 Commissioning

8.1 Preparatory measures

Notes

With the control units described here, it is possible to adjust the resonant frequency of the connected feeder. Since in this case even a small setpoint value can lead to full operation of the feeder, appropriate care must be taken to ensure that no damage occurs in the feeder due to coil hammering.

In practice, however, the resonant frequency range cannot be used without feedback of the acceleration, as the feeder would not be loadable or controllable. Therefore, a certain frequency offset from the resonant frequency must be set. The frequency offset can be both below and above the resonant frequency.

Independent of the input voltage, the frequency converter's output voltage is 205 VAC when delivered. **When using 110V VAC coils, the output voltage must be set using parameter: "Umax"**, otherwise the feeder coil and the drive or the vibratory feeder may be damaged.

- Check whether the local supply voltage corresponds to that of the unit (type plate information) and whether the connected power of the feeder is within the permissible power range.
- Check that the output voltage and frequency of the control unit are compatible with the selected magnet.
- Connect the control unit according to the enclosed connection diagram
- Adjust setpoint to zero
- Switch off Enable (if used)

The control unit is now basically ready for operation and can be switched on (mains, Enable).

Resonance frequencies: Due to the structure of the spring-mass system of the feeders, the system can resonate at several vibrating frequencies. The additional resonant points are at a multiple of the desired frequency. In critical cases, the automatic frequency search cannot reliably detect the desired vibrating frequency; in this case, the frequency may have to be adjusted manually.

Storage: After a storage period of one year, the internal DC link capacitors must be reformed. To do this, connect the MFS to the supply voltage for 60 minutes without load; for the IP54 version, also switch on the mains switch. If the product is stored for more than one year, the manufacturer must take care of the reforming. Failure to observe the reforming prescriptions may result in the destruction of the unit.

8.2 Operating frequency of the feeder coils

When using the unit for the first time the current in the solenoid circuit should be checked with an RMS meter or the heat development at the coil should be monitored, as the current through the coil may increase at low frequency settings.

In order to avoid excessive power consumption and thus possibly an overload of the coils, please make sure that the coils are designed for the operating frequency.
An incorrect vibrating frequency may lead to the destruction of the coils and the drive or the vibratory feeder. Make sure that suitable feeder coils are used for the desired vibrating frequency.

8.3 Measurement of output voltage and output current

Since the unit output is an electronic frequency converter with pulse-width modulated switching signals, the voltage and current values cannot be measured with any standard measuring device. Moving iron meters are recommended for measuring these values.

9.0 Settings

9.1 Notes on controller mode

- For controller mode, an accelerometer mounted on the vibratory feeder is required, e.g. SW 70 (for IP54 units) or SW10 (for IP20 units).

- In control mode with sensor feedback, **all** vibrations detected by the sensor are processed in the control circuit. External vibrations caused by neighbouring machines, by an unstable position of the feeder, or by unstable mounting of the accelerometer can lead to erroneous control performance. Especially during the AFS automatic frequency search, no external influences must be allowed to affect the feeder.

9.2 Mounting the accelerometer

The accelerometer must return the movement and the acceleration of the feeder to the control circuit of the control unit. It is therefore very important that no additional spurious vibrations caused by an unfavourable sensor mounting are measured.

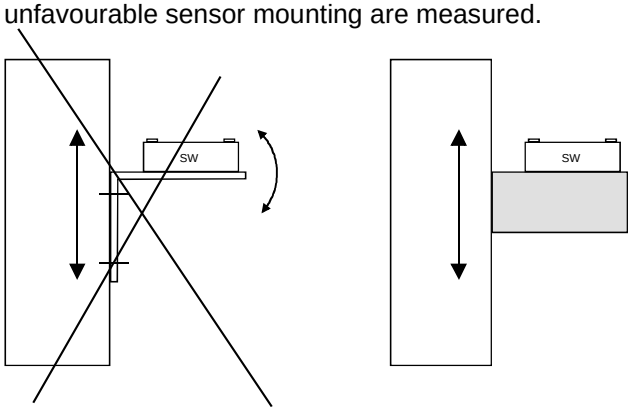

The sensor should be mounted in the direction of vibration (ideally at the same inclination as the feeder springs) on a solid mounting block which does not generate any natural vibrations.

The accelerometer cable must be supported with a cable clamp to prevent the cable from being damaged.

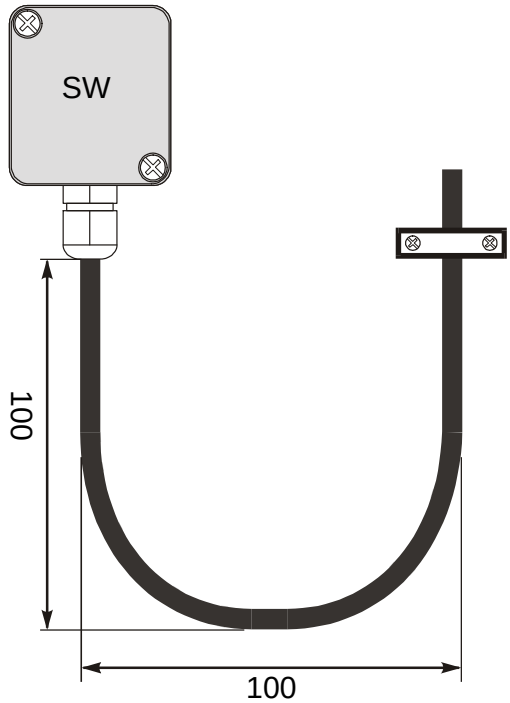

In control mode, the output signal level directly determines the feeder's maximum vibration amplitude.

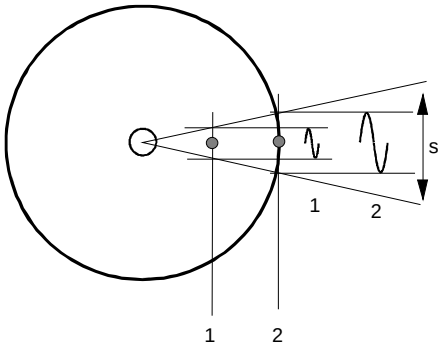

In the case of bowl feeders, it is advisable to mount the sensor as far as possible on the outer diameter so that the largest possible vibration displacement is covered.

If the sensor signal is too low, the setpoint's control range is significantly restricted.

s = vibration displacement

Mounting point 1 = small vibration amplitude
Mounting point 2 = large vibration amplitude

Example of bowl feeder

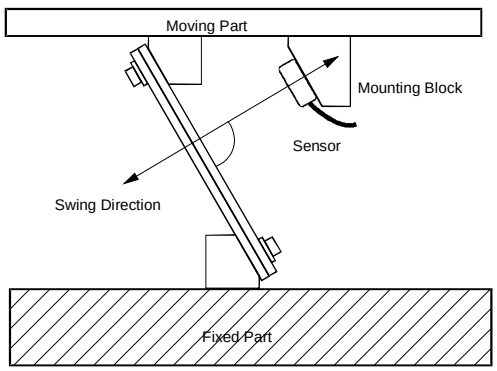

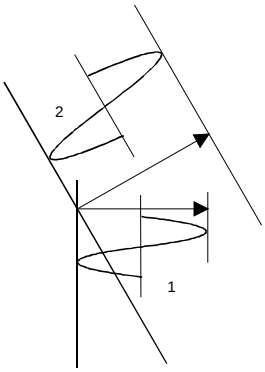

1. small amplitude with vertical mounting.
2. larger amplitude when mounted at the same inclination angle as the springs.

Example of linear feeder

The control system and the sensor attached to the feeder form a closed control loop, whereby the signal supplied by the sensor has a decisive influence on the setpoint's control range. I.e. the feeder is controlled so that the actual value (feed rate or vibration intensity) corresponds to the specified setpoint (ideal: 100 % setpoint = 100 % actual value). However, since the actual value depends on the feeder (frequency, acceleration, vibration amplitude) and also on the sensor's mounting location, the control range must usually be adjusted.
The adjustment is made with the "Max" parameter in the "Feeder" menu. The measured sensor signal is adjusted with the value that can be set here. In most cases, a value below 100 must be entered so that the setpoint’s control range reaches 100 % or appears to be as large as possible.
If no satisfactory adjustment is possible, the accelerometer should be mounted at a location with a larger vibration amplitude (see example of bowl feeder).
The importance of adjusting this value can be seen, for example, in the time response of the controller. Where the actual value is badly adjusted, for example, the result can be that the feeder only ramps up very slowly when it is switched on.

9.3 Correlation between acceleration and vibration amplitude

The sensor measures the feeder's instantaneous acceleration. This results in a sinusoidal output voltage of the sensor. The acceleration increases with increasing vibrating frequency. Therefore, the sensor output signal can be larger at high frequencies and small vibration amplitude than at low frequencies and larger vibration amplitude.

Acceleration $a = \omega^2 s$ where $\omega = 2\pi f$ Since, in practice, the acceleration is referred to the gravity acceleration, and the effective vibration amplitude is measured in mm, the following rule of thumb applies: $a[g] = \frac{2^2 \pi^2 f^2 [Hz]^2 s_n [mm]}{9{,}81 \quad 2 \cdot 10^3} = \frac{f^2 [Hz]^2 s_n [mm]}{497}$ a[g] = acceleration (referred to gravity acceleration 9.81 m/s²) s_n[mm] = effective vibration amplitude	Put into practice, where 497 ~ 500 results in, for example: 1. Vibrating frequency 50 Hz, vibration amplitude 3 mm $a = \frac{50^2 \cdot 3}{\approx 500} = 15g$ or 2. Vibrating frequency 33 Hz, vibration amplitude 5 mm $a = \frac{33^2 \cdot 5}{\approx 500} = 10{,}89g$

With a sensor output voltage of 0.3 V/g, the sensor produces a peak voltage of 4.5 V at a peak acceleration of 15 g (example 1), which corresponds to an RMS value of 3.18 V.
Example 1: => 15 g => 4.5 V => 3.18 Vrms.
Example 2: => 11 g => 3.3 V => 2.33 Vrms.

Therefore, the widely differing acceleration values of the various feeders may result in large differences in the feedback signals, which makes it necessary to adjust the control unit to the maximum value.

9.4 Determining the resonant frequency

Caution!

When operating at resonance frequency, small setpoints can cause very large vibration amplitudes.

Manual vibration frequency setting (operation without accelerometer)

It is essential that the output frequency is set at a low value, as a large vibration amplitude can be generated even with a low output voltage at the resonant frequency. To determine the resonant frequency, an RMS current meter must be connected on the output cable. Please adjust a low setpoint. Then change the frequency and observe the current and the vibration amplitude. **The resonant frequency is reached at maximum vibration amplitude and minimum output current. For stable feeder operation, it is recommended to offset the value by approx. 1...2 Hz, depending on the requirements, below or above the determined resonant frequency.** This frequency offset must be determined by the user, as different conditions prevail with different feeders.

9.5 Commissioning the control unit in control mode

Connect the control unit
Mount and connect the sensor

Automatic frequency search and controller mode
Initial commissioning using the example of a 50 Hz feeder:

Procedure	Adjustment menu and parameters	Value	Note
Adjust setpoint to zero	Output \ Feeder	0%	Avoid unintended and uncontrolled feeder operation
Limiting output frequency*	Limit values \ Min. freq. Limit values \ Max. freq.	35 Hz 65 Hz	Limit the minimum and maximum output frequency. Please note that the minimum and maximum frequency limit values exclude the multiples of the vibrating frequency in the resonant frequency search. For safe operation, it is recommended to limit the frequency range as much as possible. In this example, the minimum value is set to 35 Hz and the maximum value to 65 Hz.
Switch Acc. controller On	Feeder \ Acc. controller	☑	This activates the amplitude control.
Switch Acc. controller On	Feeder \ Auto freq.	☑	This activates the frequency control.
Carefully increase the setpoint	Output \ Feeder	>0 %	As soon as the feeder's acceleration generates a sufficiently strong sensor signal, the frequency converter automatically starts the automatic frequency search and control. **Note!** A setpoint set too low can lead to incorrect results. **Caution!** The increments of the setpoint setting increase automatically when the key is pressed for a longer time. Please always press the button briefly for small increments The frequency converter automatically saves the last frequency found.
Adjusting the vibration amplitude	Output \ Feeder	>0%	As soon as the frequency converter regulates stably at the resonant frequency found, the desired vibration amplitude can be set.

*only visible if the service menu is enabled.

10.0 Troubleshooting

Error messages

If there is an error, a message flashes in the first line of the display.
Error_2401/2402 Acc sensor fault: Acc. sensor not connected, or defective.
Error_0005 Overvoltage: Mains input voltage too high.
Error_0002 Overload: Output power exceeded e.g. wrong frequency set, magnetic air gap too large.
Error_0088 Overcurrent: Defective coil, earth fault, defective cable.
Error_0001 Track Timeout: If sensor timeout function is exceeded.
Error_0112 Control overheated
Error_0113 Feeder coil overheated: (signal from external temperature switch)
Error_0087 Peak current: Set frequency too low for coil used, or frequency changes too fast with this setting.
Acknowledgement with the menu item Service -> Execute error. For most (but not all) errors, pressing the green "I" key will suffice.

Problem	Additional information	Possible cause
Feeder is not running	Display shows the symbol ⛔	Enable is locked. Check the connection and the Enable parameters.
Feeder is not running	Display shows the symbol STOP	The red "Stop" button has been pressed. Press the green button "Start / Reset".
Feeder is not running	Display shows a setpoint	Check if the feeder is properly connected.
Acc. sensor error	Error message: Acc. sensor error 2401/2402	Check if the Acc. sensor is properly connected.
Automatic frequency search does not start	Display shows a static frequency	AFC controller is not switched on. Switch "Auto. freq." On.
Automatic frequency search does not start	Feeder vibration amplitude is small	Sensor signal is too low. Increase the setpoint.
Automatic frequency search does not start	Feeder vibration amplitude is large	Sensor signal is too low. Check the sensor's mounting location. Check the V/g ratio of the sensor.
The automatic frequency search stops at the limit value "Min. freq."		The resonance frequency is below the limit value "Min. freq." Check the setting.
The automatic frequency search stops at the limit value "Max. freq."		The resonance frequency is above the limit value "Max. freq." Check the setting.
The automatic frequency search deviates from the resonant frequency		Exclusively during first commissioning, it is possible that the frequency converter initially shifts away from the resonant frequency. In this case, the search will reverse at the frequency limits and move back towards the resonant frequency.

11.0 Housing version connection

Internal connection 3...8 A units

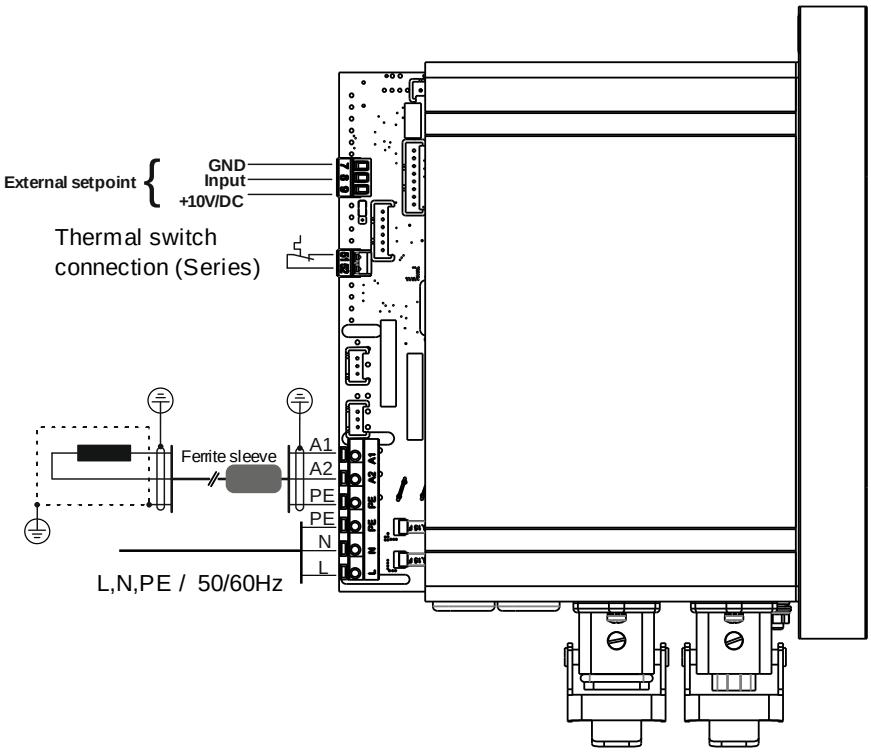

Different connection options are available depending on the unit design.

Plug and Vib (PV) version:

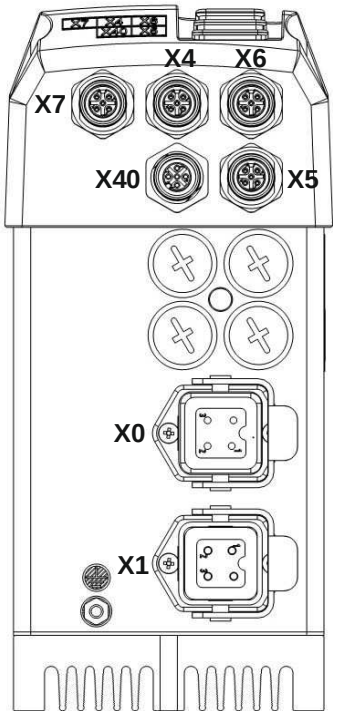

X7 Output 24V Valve
1 = +24 VDC Output
3 = GND

X4 Track control sensor
1 = +24 VDC
2 = nc
3 = GND
4 = +24 VDC Input

X40 Acceleration sensor
1 = +24 VDC
2 = Input
3 = GND
4 = nc

X6 Enable input
1 = +24 VDC
2 = nc
3 = GND
4 = +24 VDC Input

X5 Status output
1 =
2 = nc
3 = GND
4 =
Relay contact (Max. 24V, 1A)
5 = Time out +24V Output

X0 Mains connection 110 / 230 V, 50/60 Hz
1 = L
2 = N
3 = nc
4 = PE

X1 Output feeder
1 = A1
2 = A2
3 = Shield
4 = PE

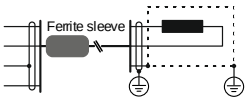

To comply with EMC regulations, a shielded output cable must be installed to the feeder, which must also be routed through supplied the ferrite sleeve.

12.0 Connection of control cabinet version

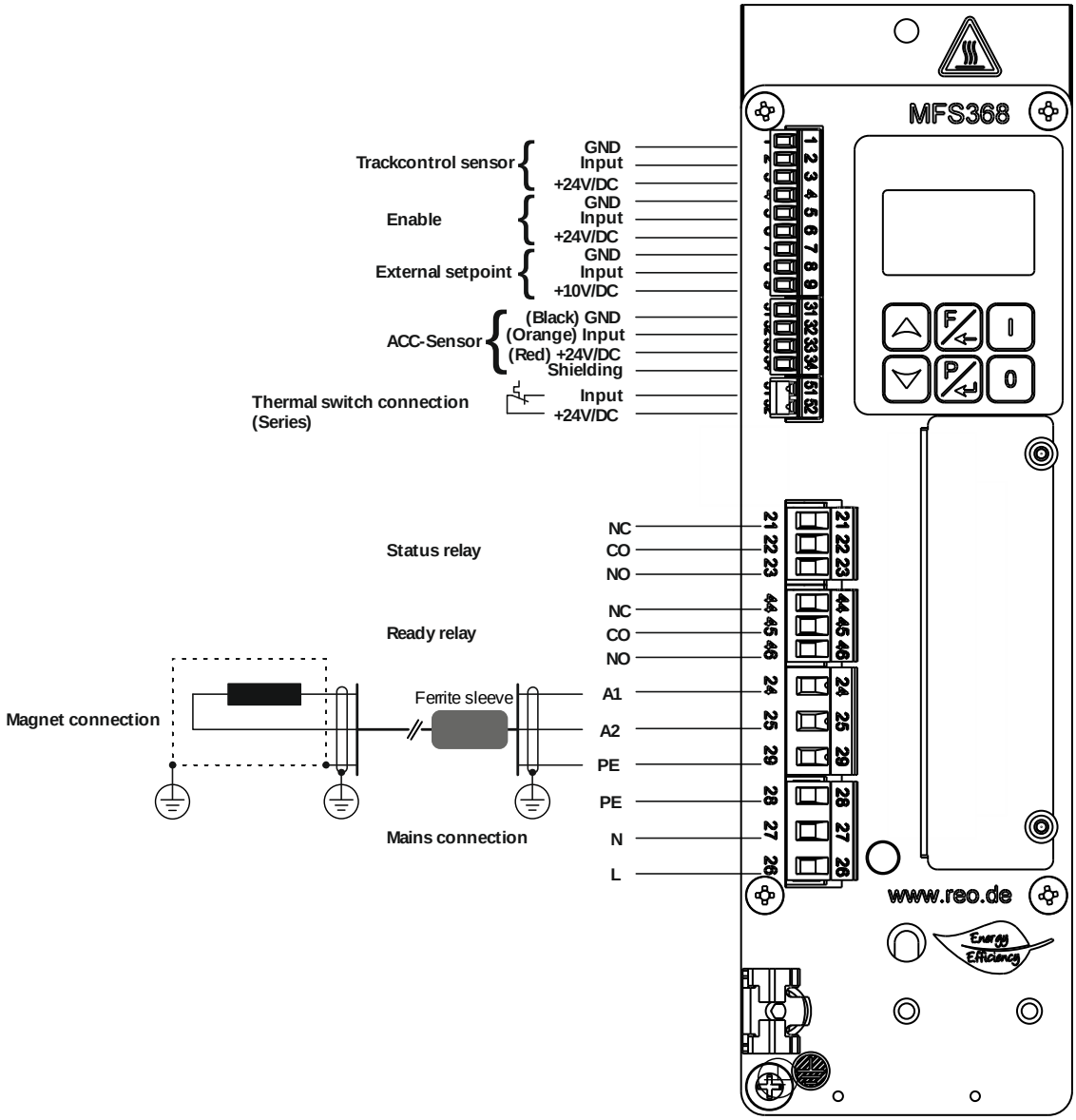

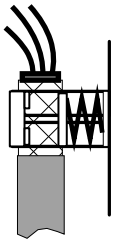

Spring clamp for the shield connection fc
the output cable and the
acceleration sensor

EMC shield clamp (accessory)
Order No.: 27100190100

To comply with EMC regulations, a shielded output cable must be installed to the feeder, which must also be routed through supplied the ferrite sleeve.

external enable

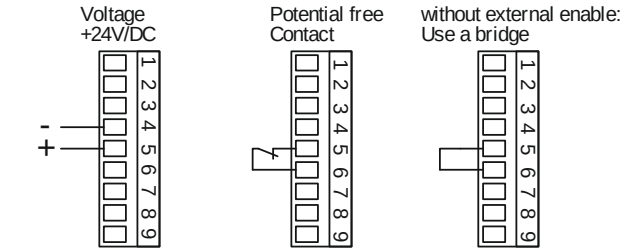

external setpoint

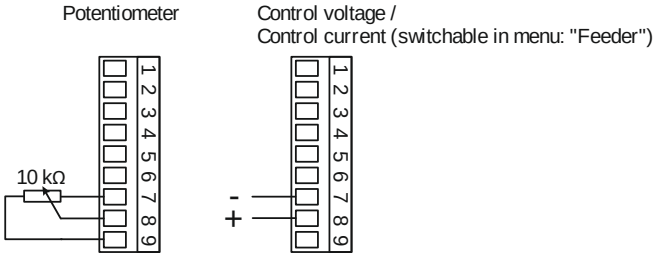

13.0 Dimension drawing

Housing versions

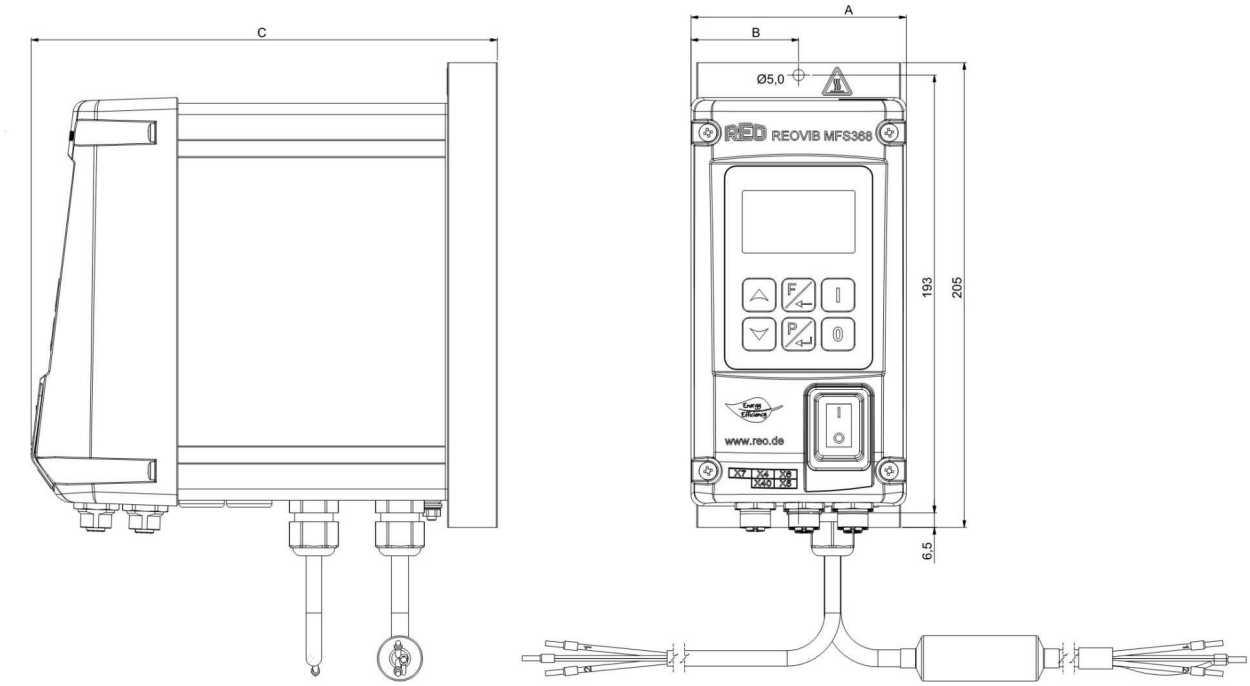

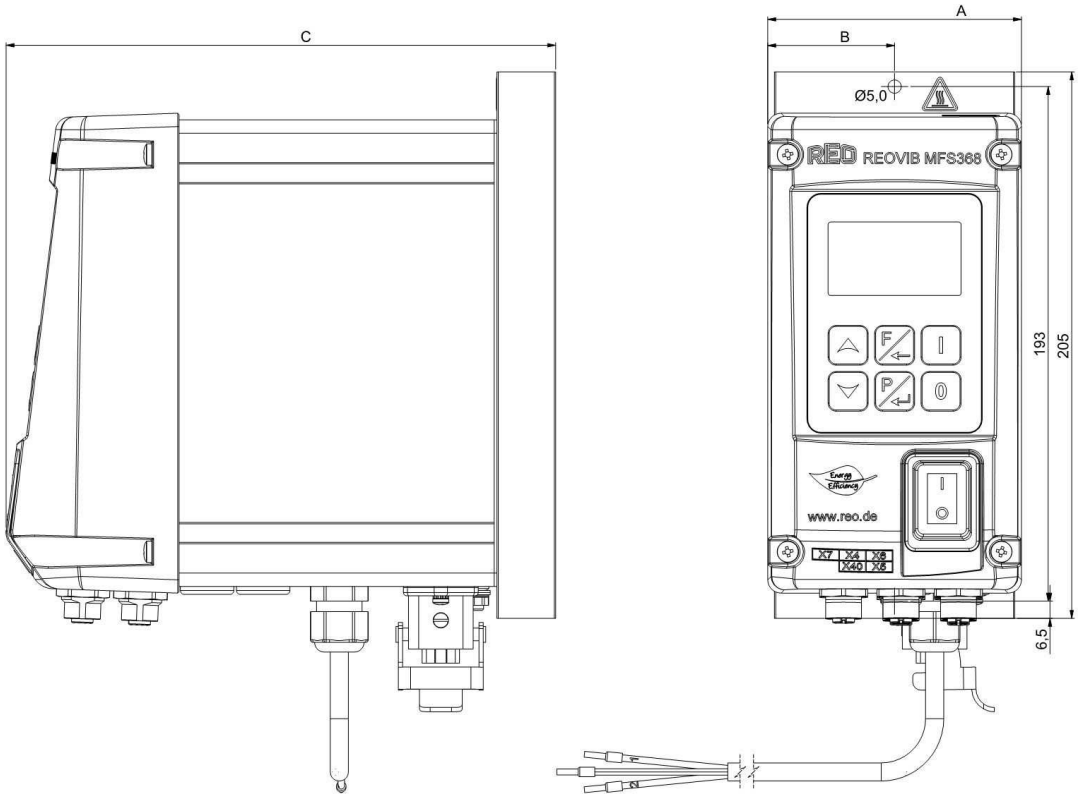

	3A	6A	8A
A	95	95	100
B	47,5	47,5	50
C	187	206	224

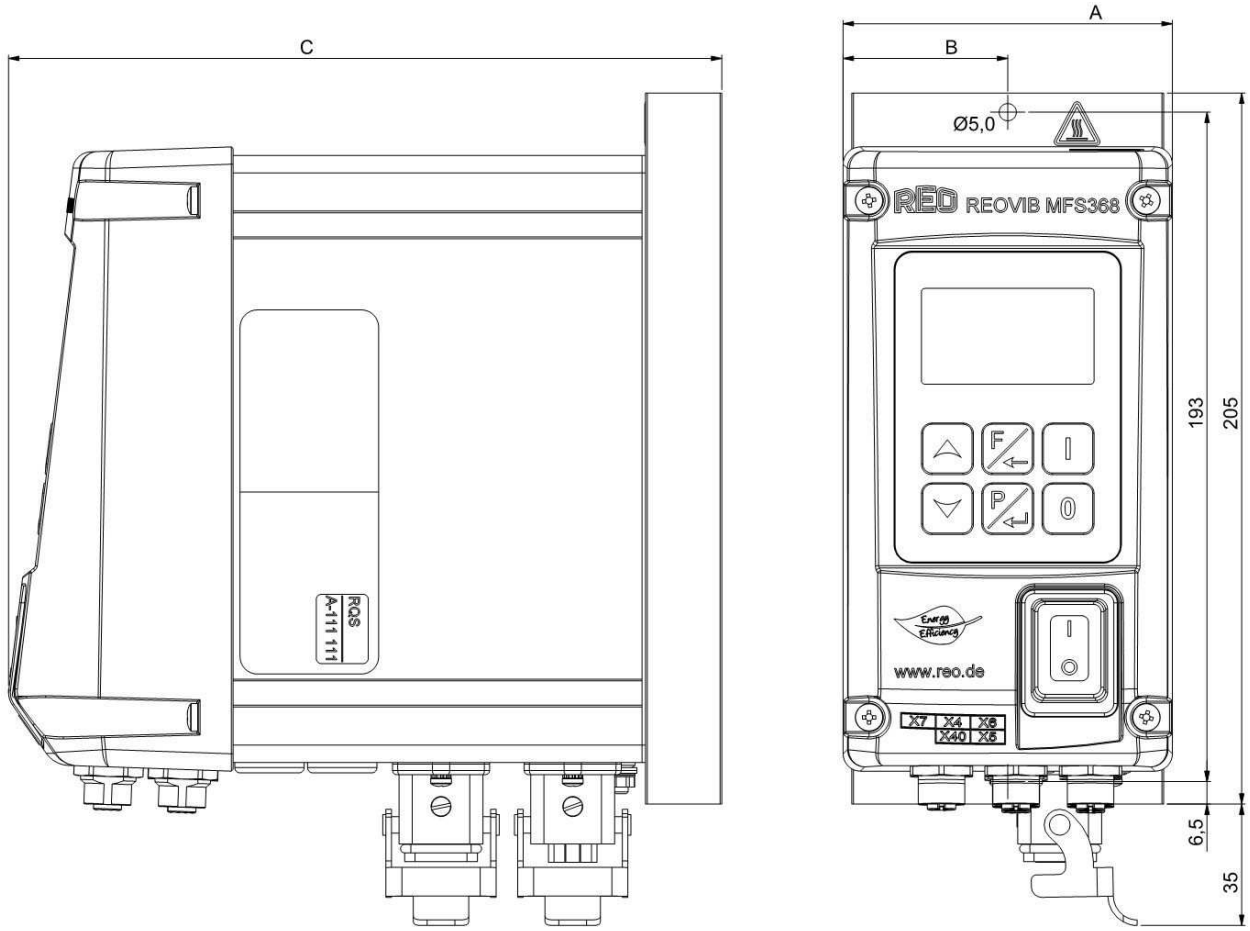

Installation clearances

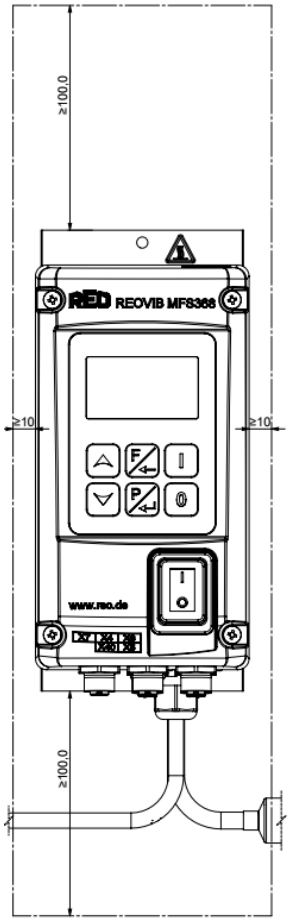

Control cabinet version

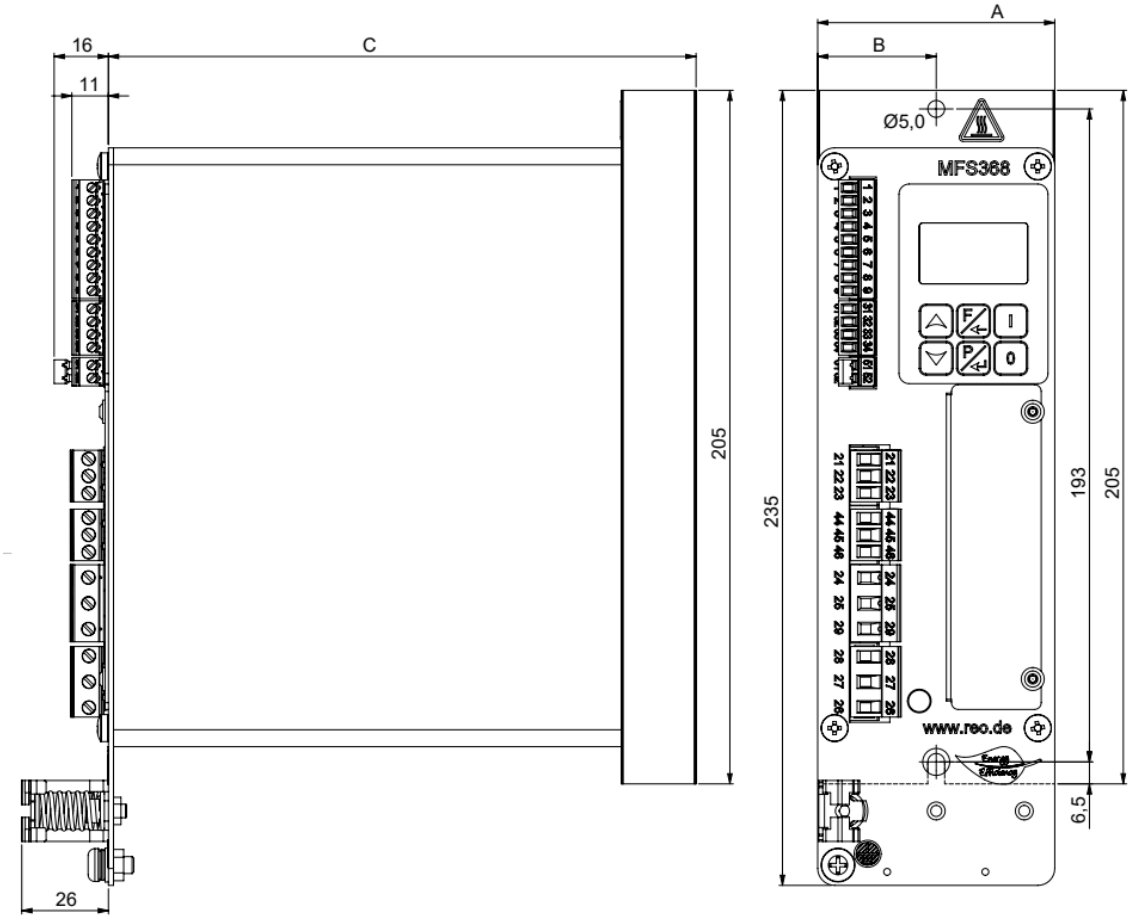

Installation clearances

	3A	6A	8A
A	70	70	100
B	35	35	50
C	155	174	192

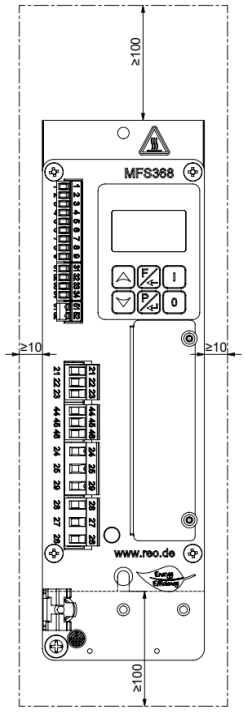

All dimensions in [mm]

14.0 Assembly instruction

Only suitable for mounting on concrete or other **non-combustible** surfaces.
The screws (M4) may be tightened with a maximum of 2.5 Nm.

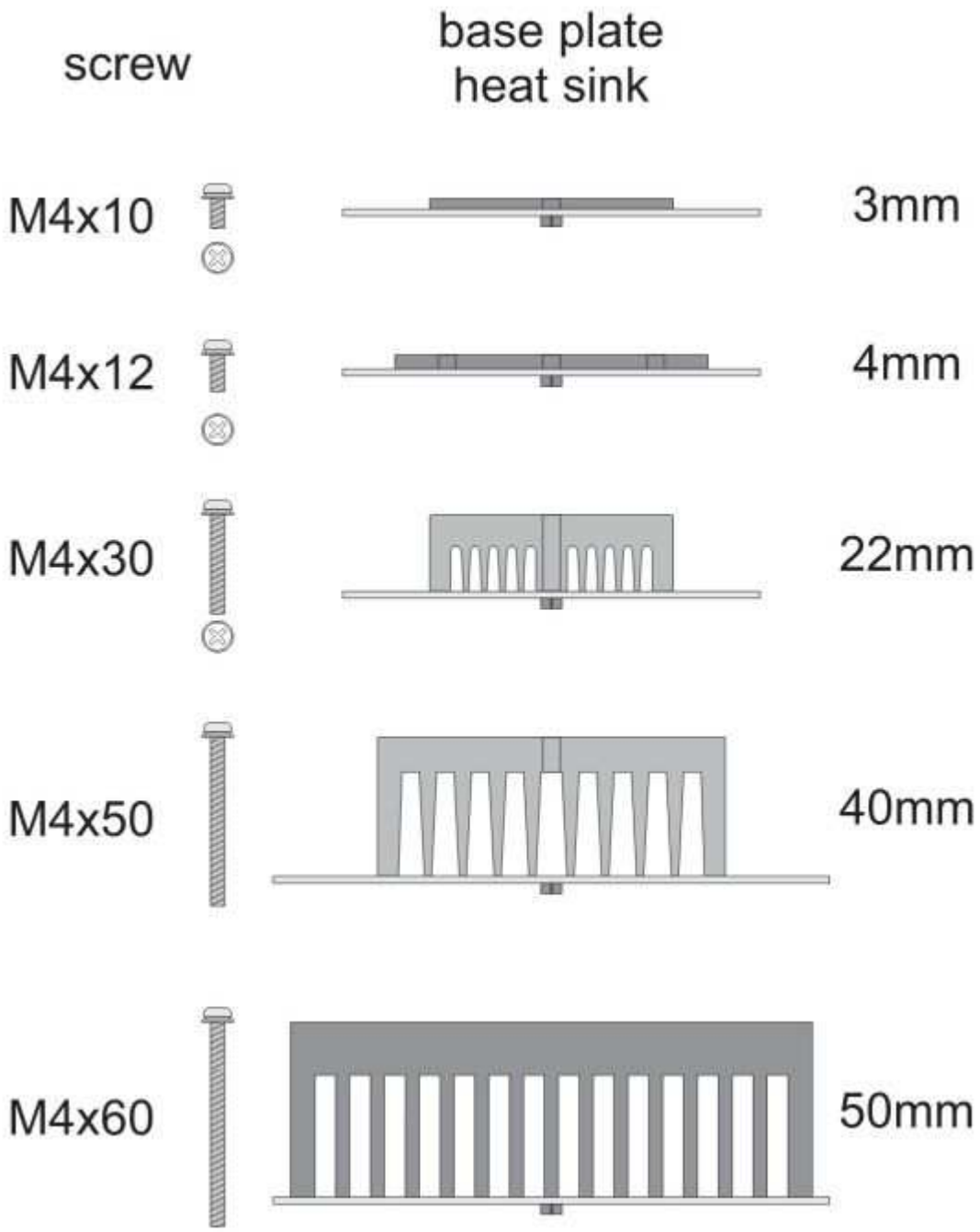

A 1.0 Accessories / Options

Product	Ordering number
Ferrite sleeve for output cable	90009017101
Plug-in output cable with ferrite sleeve	900090359
Shield connection terminal KLBUE 3-8 SC	27100190100
REOVIB MEASUREMENT BOX 10A IP40 300V	20001220101

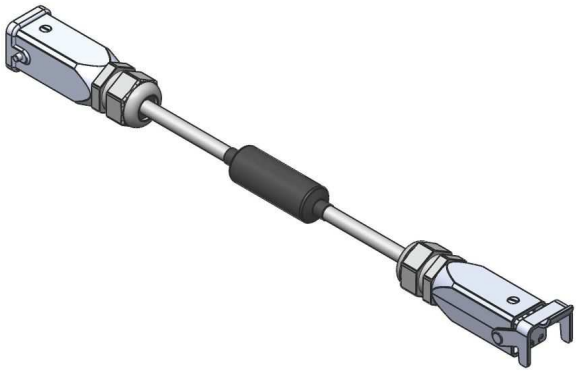

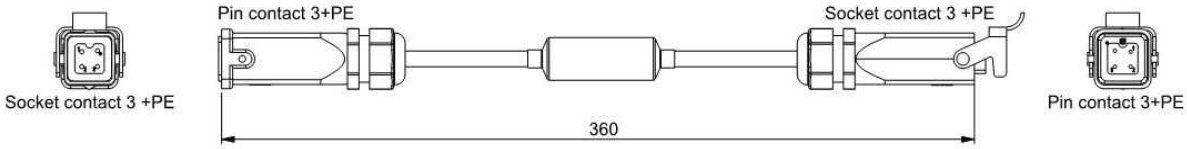

All dimensions in [mm]

REO AG
Brühler Straße 100 · D-42657 Solingen
Tel.: +49 (0)212 8804 0 · Fax: +49 (0)212 8804 188

E-Mail: info@reo.de
Internet: www.reo.de

Divisions:

REO Vibratory Feeding and Power Electronics Division

REO Vibratory Feeding and Power Electronics Division
Brühler Straße 100 · D-42657 Solingen
Tel.: +49 (0)212 8804 0 · Fax: +49 (0)212 8804 188
E-Mail: info@reo.de

REO Train Technologies Division

REO Train Technologies Division
Erasmusstraße 14 · D-10553 Berlin
Tel.: +49 (0)30 3670236 0 · Fax: +49 (0)30 3670236 10
E-Mail: zentrale.berlin@reo.de

REO Drives Division

REO Drives Division
Holzhausener Straße 52
D-16866 Kyritz
Tel.: +49 (0)33971 485 0 · Fax: +49 (0)33971 485 90
E-Mail: zentrale.kyritz@reo.de

REO Medical and Current Transformer Division

REO Medical and Current Transformer Division
Schuldholzinger Weg 7 · D-84347 Pfarrkirchen
Tel.: +49 (0)8561 9886 0 · Fax: +49 (0)8561 9886 40
E-Mail: zentrale.pfarrkirchen@reo.de

REO Test and PowerQuality Division

REO Test and PowerQuality Division
Brühler Straße 100 · D-42657 Solingen
Tel.: +49 (0)212 8804 0 · Fax: +49 (0)212 8804 188
E-Mail: info@reo.de

PRODUCTION+SALES:

- India
  REO GPD INDUCTIVE COMPONENTS PVT. LTD
  E-Mail: info@reogpd.com · Internet: www.reo-ag.in
- USA
  REO-USA, Inc.
  E-Mail: info@reo-usa.com · Internet: www.reo-usa.com

SALES:

- France
  REO VARIAC S.A.R.L.
  E-Mail: reovariac@reo.fr · Internet: www.reo.fr
- Great Britain
  REO (UK) Ltd.
  E-Mail: main@reo.co.uk · Internet: www.reo.co.uk
- Italy
  REO ITALIA S.r.l.
  E-Mail: info@reoitalia.it · Internet: www.reoitalia.it
- Poland
  REO CROMA Sp.zo.o
  E-Mail: croma@croma.com.pl · Internet: www.croma.com.pl
- Spain
  REO ESPAÑA 2002 S.A.
  E-Mail: info@reospain.com · Internet: www.reospain.com
- Switzerland
  REO ELEKTRONIK AG
  E-Mail: info@reo.ch · Internet: www.reo.ch
- Turkey
  REOTURKEY ELEKTRONİK San. ve Tic. Ltd. Şti.
  E-Mail: info@reo-turkey.com · Internet: www.reo-turkey.com
- China
  REO Shanghai Inductive Components Co., Ltd
  E-Mail: info@reo.cn · Internet: www.reo.cn