ZVS-Viewer (c)2014
NAME:K.SCHIPPMANN OBJECT:788840 DATE:19-Jul-21 10:38:11

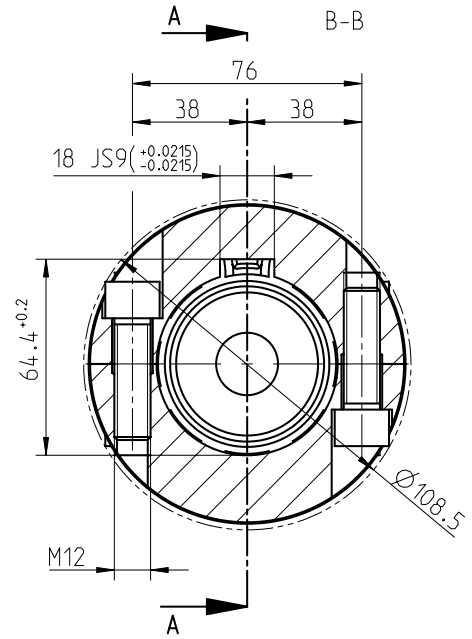


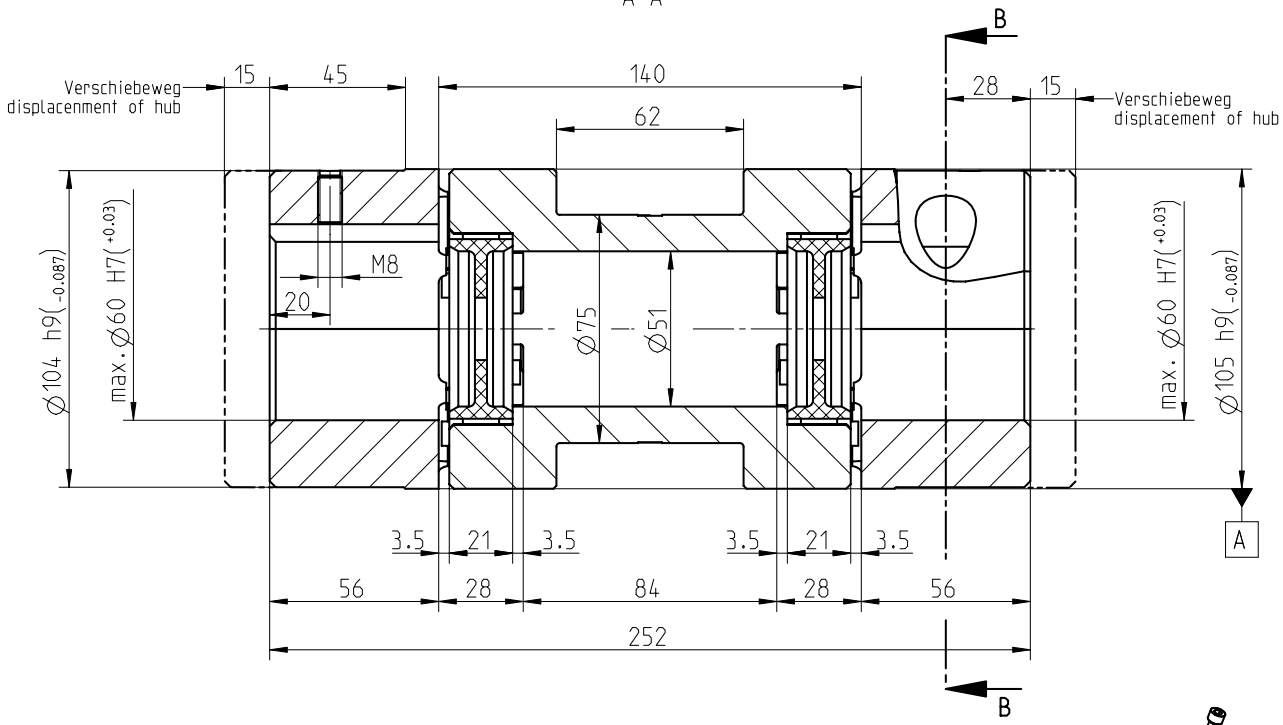


| zul. Radialverlagerungen (^Kr) | |
|---|---|
| allowable radial displacements (^Kr) | |
| bei n = 1500 $min^{-1}$ | bei n = 3000 $min^{-1}$ |
| at n = 1500 rpm | at n = 3000 rpm |
| ^Kr = 1.95 mm | ^Kr = 1.47 mm |

Drehmoment / Torque
Zahnkranz / spider 98 Sh A-GS
$T_{KN}$ = 310 Nm
$T_{Kmax}$ = 620 Nm

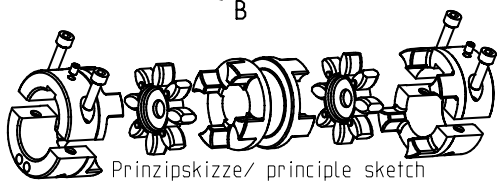
Prinzipskizze/ principle sketch

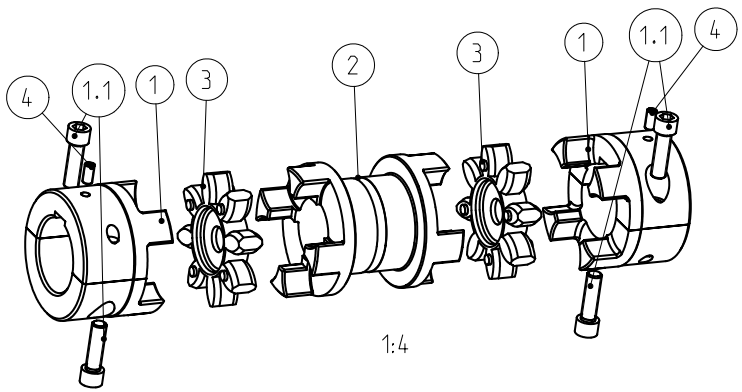

1:4

Passfedernuten nach DIN 6885 Bl, 1-JS9
keyways acc. to DIN 6885 sheet 1-JS9

Massentraegheitsmoment
mass moment of inertia
$J_{Ges.}$ = 0.0561362 $kgm^2$

Schraubenanzugsmoment Teil 1.1
screw tightening torque part 1.1
DIN EN ISO 4762 - M12x40 - 12.9, $T_A$= 115 Nm

Schutzvermerk ISO 16016 beachten
Note protection mark acc. to ISO 16016

| Massstab Scale | 3:5 | Format Size | A3 |
|---|---|---|---|

ROTEX 48 - L=140
ZS-DKM-SH

ROTEX 48 - L=140
ZS-DKM-SH

| | gezeichnet drawn | Werkstoff Material | | Kz | Lfd.-Nr. Current number | Index Rev. |
|---|---|---|---|---|---|---|
| Datum Date | 26.08.20 | Norm Standard | | M | 788840 | 2 |
| Name | GR | Gewicht Weight | 7.959 kg | | | |

KTR