# 8BVI0880HWS0.008-1

## 1 General information

- Integrated uncontrolled standstill and safe stop
- Integrated connection for motor holding brake and temperature sensor
- 2 slots for ACOPOSmulti plug-in modules

# 2 Order data

| Order number | Short description | Figure |
|---|---|---|
| | **Wall mounting** |  |
| 8BVI0880HWS0.008-1 | ACOPOSmulti inverter module, 88 A, AS, wall mounting | |
| | **Required accessories** | |
| | **Terminal block sets** | |
| 8BZVI1650S0.000-1A | Screw clamp terminal block set for ACOPOSmulti 8BVI0660HxS0, 8BVI0880HxS0, 8BVI1650HxS0 and 8BVI2000HxS0 modules: 1x 8TB2104.203L-00, 1x 8TB2106.2010-00, 1x 8TB2108.2010-00 | |
| | **Optional accessories** | |
| | **Accessory sets** | |
| 8BXB000.0000-00 | ACOPOSmulti accessory set for encoder buffering consisting of: 1x battery AA 3.6 V, 1x protective cover for battery holder | |
| | **Fan modules** | |
| 8BXF001.0000-00 | ACOPOSmulti fan module, replacement fan for ACOPOSmulti modules (8BxP/8B0C/8BVI/8BVE/8B0K) | |
| | **Plug-in modules** | |
| 8BAC0120.000-1 | ACOPOSmulti plug-in module, EnDat 2.1 interface | |
| 8BAC0120.001-2 | ACOPOSmulti plug-in module, EnDat 2.2 interface | |
| 8BAC0121.000-1 | ACOPOSmulti plug-in module, HIPERFACE interface | |
| 8BAC0122.000-1 | ACOPOSmulti plug-in module, resolver interface 10 kHz | |
| 8BAC0123.000-1 | ACOPOSmulti plug-in module, incremental encoder and SSI absolute encoder interface for RS422 signals | |
| 8BAC0123.001-1 | ACOPOSmulti plug-in module, incremental encoder interface for 5 V single-ended and 5 V differential signals | |
| 8BAC0123.002-1 | ACOPOSmulti plug-in module, incremental encoder interface for 24 V single-ended and 24 V differential signals | |
| 8BAC0124.000-1 | ACOPOSmulti plug-in module, SinCos interface | |
| 8BAC0125.000-1 | ACOPOSmulti plug-in module, SinCos EnDat 2.1/SSI/BiSS interface | |
| 8BAC0130.000-1 | ACOPOSmulti plug-in module, 2 digital outputs, 50 mA, max. 62.5 kHz, 2 digital outputs, 500 mA, max. 1.25 kHz, 2 digital inputs 24 VDC | |
| 8BAC0130.001-1 | ACOPOSmulti plug-in module, 2 digital outputs, 50 mA, max. 62.5 kHz, 4 digital outputs, 500 mA, max 1.25 kHz | |
| 8BAC0132.000-1 | ACOPOSmulti plug-in module, 4 analog inputs ±10 V | |
| 8BAC0133.000-1 | ACOPOSmulti plug-in module, 3 RS422 outputs for ABR encoder emulation, 1 MHz | |
| | **POWERLINK/Ethernet cables** | |
| X20CA0E61.00020 | POWERLINK/Ethernet connection cable, RJ45 to RJ45, 0.2 m | |
| X20CA0E61.00025 | POWERLINK/Ethernet connection cable, RJ45 to RJ45, 0.25 m | |
| X20CA0E61.00030 | POWERLINK/Ethernet connection cable, RJ45 to RJ45, 0.3 m | |
| X20CA0E61.00035 | POWERLINK/Ethernet connection cable, RJ45 to RJ45, 0.35 m | |
| X20CA0E61.00050 | POWERLINK/Ethernet connection cable, RJ45 to RJ45, 0.5 m | |
| X20CA0E61.00100 | POWERLINK/Ethernet connection cable, RJ45 to RJ45, 1 m | |
| | **Shield component sets** | |
| 8SCS001.0000-00 | ACOPOSmulti shield component set: 1x shield plate 4x type 1, 1x hose clamp, B 9 mm, D 12-22 mm | |
| 8SCS002.0000-00 | ACOPOSmulti shield component set: 1x clamping plate, 2x clamp D 4-13.5 mm, 2x screws | |
| 8SCS003.0000-00 | ACOPOSmulti shield component set: 1x shield mounting plate 4x 45°, 8x screws | |
| 8SCS004.0000-00 | ACOPOSmulti shield component set: 1x shield plate 4x type 0, 2x hose clamps, B 9 mm, D 32-50 mm | |
| 8SCS005.0000-00 | ACOPOSmulti shield component set: 1x slot cover / shield plate | |
| 8SCS010.0000-00 | ACOPOSmulti shield component set: 1x ACOPOSmulti holding plate SK14-20, 1x shield connection clamp SK20 | |
| | **Terminal blocks** | |
| 8TB2104.203L-00 | 4-pin screw clamp terminal block, 1-row, pitch: 5.08 mm, label 3: T- T+ B- B+, coding L: 1010 | |
| 8TB2106.2010-00 | 6-pin screw clamp terminal block, 1-row, pitch: 5.08 mm, label 1: Numbered consecutively | |
| 8TB2106.2210-00 | Push-in terminal block 6-pin, 1-row, spacing: 5.08 mm, label 1: numbered consecutively | |
| 8TB2108.2010-00 | 8-pin screw clamp terminal block, 1-row, pitch: 5.08 mm, label 1: Numbered consecutively | |

Table 1: 8BVI0880HWS0.008-1 - Order data

# 3 Technical data

| Order number | 8BVI0880HWS0.008-1 |
|---|---|
| **General information** | |
| B&R ID code | 0x2C1E |
| Support | |
| Dynamic node allocation (DNA) | Yes |
| Cooling and mounting type | Wall mounting |
| Slots for plug-in modules | 2 |
| Certifications | |
| CE | Yes |
| UKCA | Yes |
| Functional safety [1] | Yes |
| UL | cULus E225616<br>Power conversion equipment |
| **DC bus connection** | |
| Voltage | |
| Nominal | 750 VDC |
| Continuous power consumption [2] | 65 kW |
| Power dissipation depending on switching frequency [3] | |
| Switching frequency 5 kHz | In preparation |
| Switching frequency 10 kHz | In preparation |
| Switching frequency 20 kHz | In preparation |
| DC bus capacitance | 1980 µF |
| Variant | ACOPOSmulti backplane |
| **24 VDC power supply** | |
| Input voltage | 25 VDC ±1.6% |
| Input capacitance | 32.9 µF |
| Max. power consumption | 27 W + $P_{SLOT1}$ + $P_{SLOT2}$ + $P_{24\ V\ Out}$ + $P_{HoldingBrake}$ [4] |
| Variant | ACOPOSmulti backplane |
| **24 VDC output** | |
| Quantity | 2 |
| Output voltage | |
| DC bus voltage ($U_{DC}$): 260 to 315 VDC | 25 VDC * ($U_{DC}$/315) |
| DC bus voltage ($U_{DC}$): 315 to 800 VDC | 24 VDC ±6% |
| Fuse protection | 250 mA (slow-blow) electronic, automatic reset |
| **Motor connection** | |
| Quantity | 1 |
| Continuous power per motor connection [2] | 64 kW |
| Continuous current per motor connection [2] | 88 $A_{eff}$ |
| Reduction of continuous current depending on switching frequency [5] | |
| Switching frequency 5 kHz | 1.4 A/K (starting at 41°C) [6] |
| Switching frequency 10 kHz | 0.92 A/K (starting at -5°C) [7] |
| Switching frequency 20 kHz | 0.56 A/K (starting at -90°C) [7] |
| Reduction of continuous current depending on installation elevation | |
| Starting at 500 m above sea level | 8.8 $A_{eff}$ per 1000 m |
| Peak current | 176 $A_{eff}$ |
| Nominal switching frequency | 5 kHz |
| Possible switching frequencies [8] | 5 / 10 / 20 kHz |
| Insulation stress of the connected motor per IEC TS 60034-25:2004 [9] | Limit value curve A [10] |
| Protective measures | |
| Overload protection | Yes |
| Short-circuit and ground fault protection | Yes |
| Max. output frequency | 598 Hz [11] |
| Variant | |
| U, V, W, PE | M8 threaded bolts |
| Shield connection | Yes |
| Connection cross section range | |
| Flexible and fine-stranded wires | --- [12] |
| Terminal cable cross section dimension of shield connection | 12 to 50 mm [13] |
| Max. motor line length depending on switching frequency | |
| Switching frequency 5 kHz | 25 m |
| Switching frequency 10 kHz | 25 m |
| Switching frequency 20 kHz | 25 m |
| **Motor holding brake connection** | |
| Quantity | 1 |
| Output voltage [14] | 24 VDC +5.8% / -0% [15] |
| Continuous current per connection | 4.2 A |

Table 2: 8BVI0880HWS0.008-1 - Technical data

| Order number | 8BVI0880HWS0.008-1 |
|---|---|
| Max. internal resistance | 0.15 Ω |
| Extinction potential | Approx. 30 V |
| Max. extinction energy per switching operation | 3 Ws |
| Max. switching frequency | 0.5 Hz |
| Protective measures | |
| Overload and short-circuit protection | Yes |
| Open-circuit monitoring | Yes |
| Undervoltage monitoring | Yes |
| Response threshold for open-circuit monitoring | Approx. 0.5 A |
| Response threshold for undervoltage monitoring | 24 VDC +0% / -4% |
| **Enable inputs** | |
| Quantity | 2 |
| Circuit | Sink |
| Electrical isolation | |
| Input - Inverter module | Yes |
| Input - Input | Yes |
| Input voltage | |
| Nominal | 24 VDC |
| Maximum | 30 VDC |
| Input current at nominal voltage | Approx. 30 mA |
| Switching threshold | |
| Low | <5 V |
| High | >15 V |
| Switching delay at nominal input voltage | |
| Enable 1 → 0, PWM off | Max. 20.5 ms |
| Enable 0 → 1, ready for PWM | Max. 100 µs |
| Modulation compared to ground potential | Max. ±38 V |
| OSSD signal connections [16)] | Permitted<br>Max. test pulse length: 500 µs |
| **Trigger inputs** | |
| Quantity | 2 |
| Circuit | Sink |
| Electrical isolation | |
| Input - Inverter module | Yes |
| Input - Input | Yes |
| Input voltage | |
| Nominal | 24 VDC |
| Maximum | 30 VDC |
| Switching threshold | |
| Low | <5 V |
| High | >15 V |
| Input current at nominal voltage | Approx. 10 mA |
| Switching delay | |
| Rising edge | 52 µs ±0.5 µs (digitally filtered) |
| Falling edge | 53 µs ±0.5 µs (digitally filtered) |
| Modulation compared to ground potential | Max. ±38 V |
| **Temperature sensor connection** | |
| Quantity | 1 |
| Resistance range | 500 Ω to 5 kΩ |
| **Electrical properties** | |
| Discharge capacitance | 0.44 µF |
| **Operating conditions** | |
| Permissible mounting orientations | |
| Hanging vertically | Yes |
| Horizontal, face up | Yes |
| Standing horizontally | No |
| Installation elevation above sea level | |
| Nominal | 0 to 500 m |
| Maximum [17)] | 4000 m |
| Pollution degree per EN 61800-5-1 | 2 (non-conductive pollution) |
| Overvoltage category per EN 61800-5-1 | III |
| Degree of protection per EN 60529 | IP20 |
| **Ambient conditions** | |
| Temperature | |
| Operation | |
| Nominal | 5 to 40°C |
| Maximum | 55°C |
| Storage | -25 to 55°C |
| Transport | -25 to 70°C |
| Relative humidity | |
| Operation | 5 to 85% |
| Storage | 5 to 95% |
| Transport | Max. 95% at 40°C |

Table 2: 8BVI0880HWS0.008-1 - Technical data

| Order number | 8BVI0880HWS0.008-1 |
|---|---|
| **Mechanical properties** | |
| Dimensions [18] | |
| Width | 213.5 mm |
| Height | 317 mm |
| Depth | |
| Wall mounting | 263 mm |
| Weight | Approx. 10.9 kg |
| Module width | 4 |

Table 2: 8BVI0880HWS0.008-1 - Technical data

1) Achievable safety classifications (safety integrity level, safety category, performance level) are documented in the user's manual (section "Safety technology").
2) Valid under the following conditions: 750 VDC DC bus voltage, 5 kHz switching frequency, 40°C ambient temperature, installation elevation <500 m above sea level, no derating due to cooling type.
3) $I_M$ ... Current on motor connection X5A [$A_{eff}$]
4) $P_{SLOT1}$ ... Max. power consumption $P_{8BAC}$ [W] of the plug-in module in SLOT1 (see the technical data for the respective plug-in module).
   $P_{SLOT2}$ ... Max. power consumption $P_{8BAC}$ [W] of the plug-in module in SLOT2 (see the technical data for the respective plug-in module).
   $P_{24\ V\ Out}$ ... Power [W] that is output to connections X2/+24 V Out 1 and X2/+24 V Out 2 on the module (max. 10 W).
5) Valid under the following conditions: 750 VDC DC bus voltage. The temperature specifications refer to the ambient temperature.
6) Value for the nominal switching frequency.
7) The module cannot supply the full continuous current at this switching frequency. This unusual value for the ambient temperature, at which derating of the continuous current must be taken into account, ensures that the derating of the continuous current can be determined in the same manner as at other switching frequencies.
8) B&R recommends operating the module at its nominal switching frequency. Operating the module at a higher switching frequency for application-specific reasons reduces the continuous current and increases CPU utilization.
9) If necessary, the stress of the motor isolation system can be reduced by an additional externally wired dv/dt choke. For example, the RWK 305 three-phase dv/dt choke from Schaffner (www.schaffner.com) can be used. IMPORTANT: Even when using a dv/dt choke, it is necessary to ensure that an EMC-compatible, low inductance shield connection is used!
10) Only applies when using B&R motor cables and B&R motors.
11) The module's electrical output frequency (SCTRL_SPEED_ACT * MOTOR_POLEPAIRS) is monitored to protect against dual use in accordance with Regulation (EC) 428/2009 | 3A225. If the electrical output frequency of the module exceeds the limit value of 598 Hz uninterrupted for more than 0.5 s, then the current movement is aborted and error 6060 is output ("Power unit: Limit speed exceeded").
12) The connection is made with cable lugs for M8 (0.32") threaded bolts. The nominal cross section of the cable lug must match the cross section of the conductor to be connected in the particular application.
13) The maximum diameter that can be clamped depends on the shield component set used.
14) During configuration, it is necessary to check if the minimum voltage can be maintained on the holding brake with the intended wiring. For the operating voltage range of the holding brake, see the user documentation for the motor being used.
15) The specified value is only valid under the following conditions:
    - The 24 VDC power supply for the module is provided by an 8B0C auxiliary supply module located on the same mounting plate.
    - Connection of connectors S1 and S2 (activation of the external holding brake) by a jumper with a maximum length of 10 cm.
    If the 24 VDC power supply for the module is applied to the mounting plate using an 8BVE expansion module, then the output voltage is reduced because of voltage drops on the expansion cable. In this case, undervoltage monitoring must be disabled.
    If jumpers longer than 10 cm are used to connect connectors S1 and S2, then the output voltage is reduced due to voltage drops on the jumpers.
16) Output signal switching device (OSSD) signals are used for monitoring signal lines for short circuits and cross faults.
17) Continuous operation at an installation elevation of 500 m to 4,000 m above sea level is possible taking the specified reduction of continuous current into account. Requirements that go beyond this must be arranged with B&R.
18) These dimensions refer to the actual device dimensions including the respective mounting plate. Additional spacing above and below the devices must be taken into account for mounting, connections and air circulation.

# 4 Overload characteristics

The continuous current for the module is permitted to be exceeded for a short time during operation (dynamic overload).

### Overload response: WARNING

If the maximum overload time is exceeded, the module outputs a warning (WARNING).

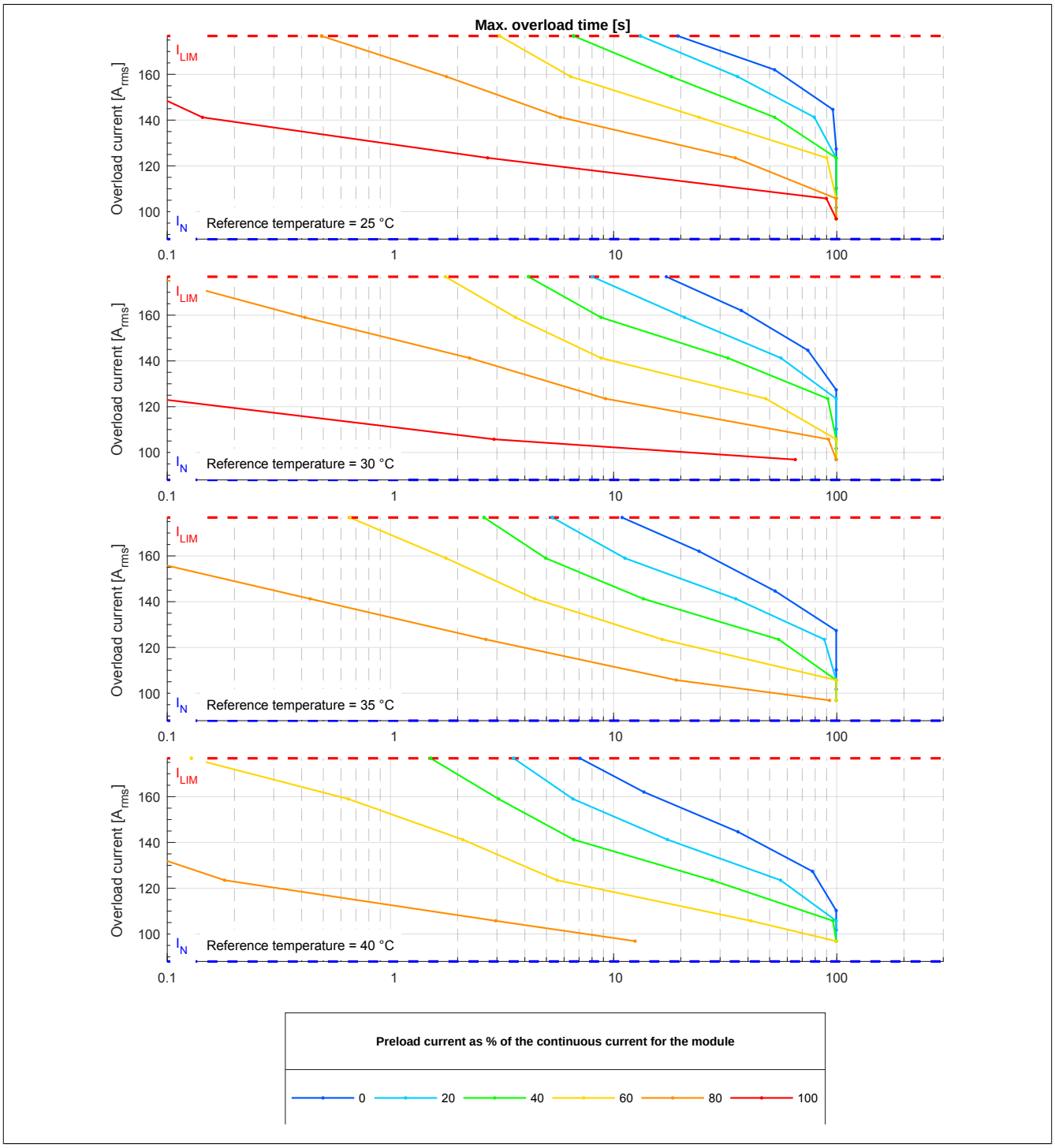


Figure 1: 8BVI0880HWSx.008-x - Overload characteristics, overload response - WARNING

| | |
|---|---|
| $I_N$ | Continuous current of the module [$A_{rms}$] |
| $I_{LIM}$ | Peak current of the module [$A_{rms}$] |
| Mounting type: | Wall mounting |
| DC bus voltage: | 750 V |
| Switching frequency: | 5 kHz |
| Rotary frequency of current indicator: | 20 Hz |
| Reference temperature: | Ambient temperature of the module |

### Overload response ERROR + STOP

When the module exceeds the maximum overload duration, it outputs an error and executes a movement stop with current limiting (ERROR + STOP).

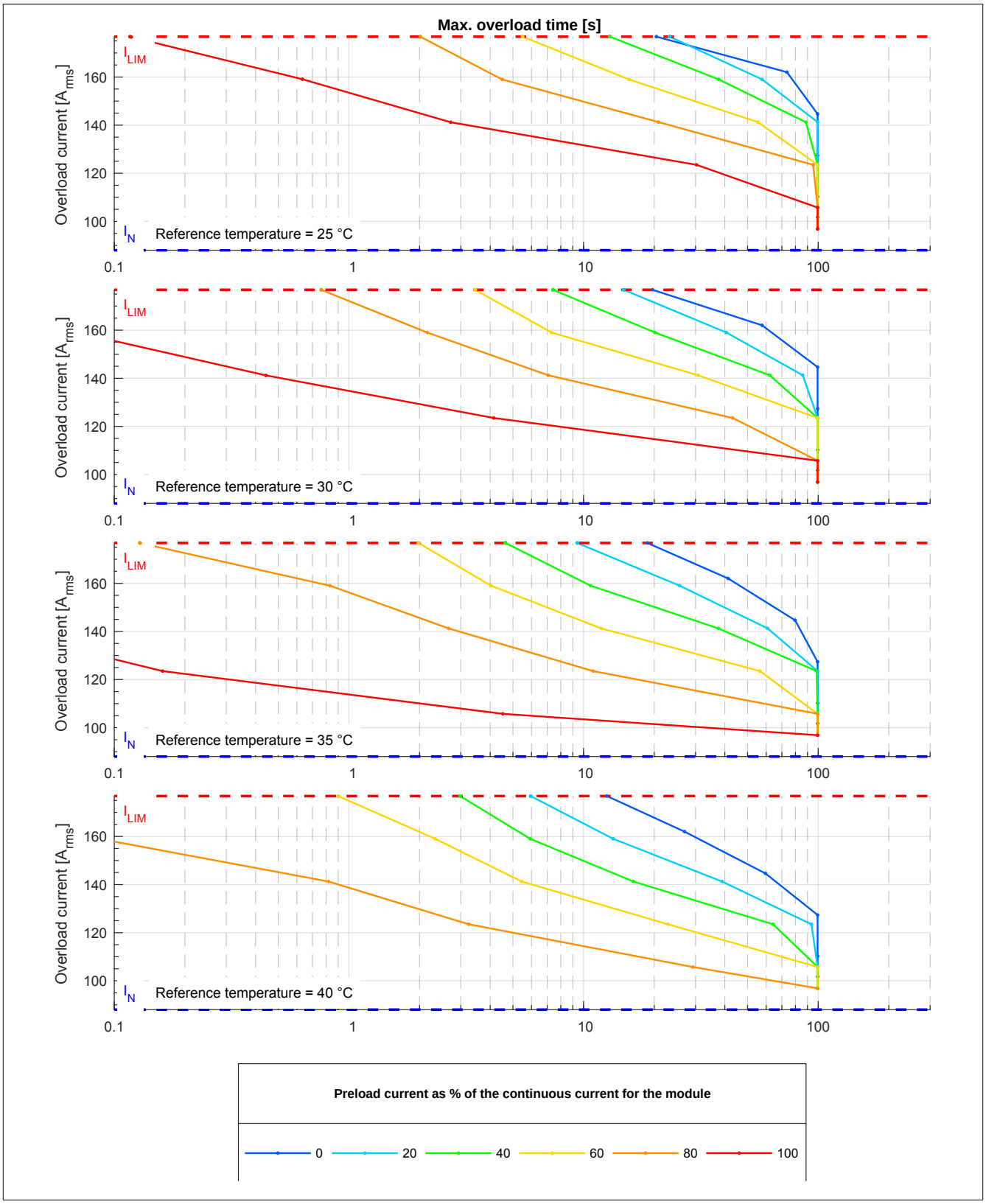


Figure 2: 8BVI0880HWSx.008-x - Overload characteristics, overload response - ERROR + STOP

| | |
|---|---|
| $I_N$ | Continuous current of the module [$A_{rms}$] |
| $I_{LIM}$ | Peak current of the module [$A_{rms}$] |
| Mounting type: | Wall mounting |
| DC bus voltage: | 750 V |
| Switching frequency: | 5 kHz |
| Rotary frequency of current indicator: | 20 Hz |
| Reference temperature: | Ambient temperature of the module |

# 5 Status indicators

Status indicators are located on the black cover of each module.

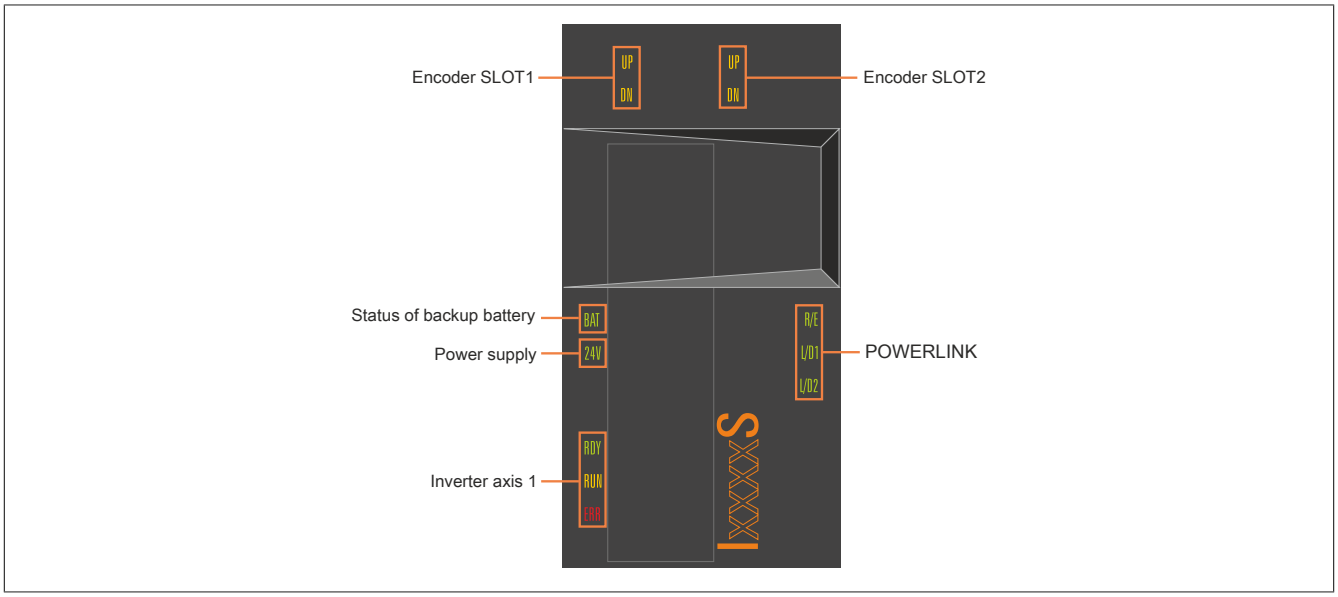


Figure 3: 8BVI inverter modules (1-axis modules) - Status indicator groups[1)]

## 5.1 LED status indicators

| Status indicator group | Label | Color | Function | Description |
|---|---|---|---|---|
| POWERLINK | R/E | Green/Red | Ready/Error | see "POWERLINK - LED status indicators" on page 9 |
| | L/D1 | Green | Link/Data activity on port 1 | |
| | L/D2 | Green | Link/Data activity on port 2 | |
| Inverter axis 1 | RDY | Green | Ready | see "RDY, RUN, ERR (8BVI, 8BVP, 8B0P) - LED status indicators" on page 9 |
| | RUN | Orange | Run | |
| | ERR | Red | Error | |
| Status of backup battery [1)] | BAT | Green/Red | Ready/Error | see "Backup battery - LED status indicators" on page 10 |
| Power supply | 24 V | Green | 24 V OK | The 24 V module power supply voltage is within the tolerance range. |
| Encoder SLOT1 | UP | Orange | Encoder direction of rotation + | The encoder position of the connected encoder is changing in the positive direction. The faster the encoder position changes, the brighter the LED lights up. |
| | DN | Orange | Encoder direction of rotation - | The encoder position of the connected encoder is changing in the negative direction. The faster the encoder position changes, the brighter the LED lights up. |
| Encoder SLOT2 | UP | Orange | Encoder direction of rotation + | See encoder SLOT1. |
| | DN | Orange | Encoder direction of rotation - | |

Table 3: 8BVI inverter modules (1-axis modules) - LED status indicators

1) Status indicator group "Backup battery status" is only available for modules with an integrated battery holder. Starting with a certain revision, the integrated battery holder is not included and using accessory kit 8BXB000.0000-00 (battery for encoder buffering) is no longer possible. For details, see the revision information of the respective module (www.br-automation.com).

1) Status indicator group "Backup battery status" is only available for modules with an integrated battery holder. Starting with a certain revision, the integrated battery holder is not included and using accessory kit 8BXB000.0000-00 (battery for encoder buffering) is no longer possible. For details, see the revision information of the respective module (www.br-automation.com).

## 5.2 RDY, RUN, ERR (8BVI, 8BVP, 8B0P) - LED status indicators

| Label | Color | Function | Description | |
|---|---|---|---|---|
| RDY | Green | Ready | Solid green | The module is ready for operation and the power stage can be enabled (operating system present and booted, no pending permanent or temporary errors). |
| | | | Blinking green [1] | The module is not ready for operation.<br>**Examples:**<br>• No signal on one or both enable inputs<br>• DC bus voltage outside the tolerance range<br>• Overtemperature on the motor (temperature sensor)<br>• Motor feedback not connected or defective<br>• Motor temperature sensor not connected or defective<br>• Overtemperature on the module (IGBT junction, heat sink, etc.)<br>• Disturbance on network |
| RUN | Orange | Run | Solid orange | The module's power stage is enabled. |
| ERR | Red | Error | Solid red [1] | There is a permanent error on the module.<br>**Examples:**<br>• Permanent overcurrent<br>• Data in EPROM not valid |
| | | | Blinking red | • LED status "Status changes when starting up the operating system loader" on page 10 |

Table 4: RDY, RUN, ERR (8BVI, 8BVP, 8B0P) - LED status indicators

1) Firmware V2.130 and later.

# Information:

**The ACOPOSmulti drive system has no way of detecting whether the module's internal fans are actually rotating.**

## 5.3 POWERLINK - LED status indicators

| Label | Color | Function | Description | |
|---|---|---|---|---|
| R/E | Green/Red | Ready/Error | LED off | The module is not supplied with power or network interface initialization has failed. |
| | | | Solid red | The POWERLINK node number of the module is 0. |
| | | | Blinking red/green | The client is in an error state (drops out of cyclic operation). |
| | | | Blinking green (1x) | The client detects a valid POWERLINK frame on the network. |
| | | | Blinking green (2x) | Cyclic operation on the network, but the client itself is not yet in cyclic operation. |
| | | | Blinking green (3x) | Cyclic operation of the client is in preparation. |
| | | | Solid green | The client is in cyclic operation. |
| | | | Flickering green | The client is not in cyclic operation and also does not detect any other stations on the network in cyclic operation. |
| L/D1 | Green | Link/Data activity Port 1 | Solid green | A physical connection has been established to another station on the network. |
| | | | Blinking green | Activity on port 1 |
| L/D2 | Green | Link/Data activity Port 2 | Solid green | A physical connection has been established to another station on the network. |
| | | | Blinking green | Activity on port 2 |

Table 5: POWERLINK - LED status indicators

## 5.4 Backup battery - LED status indicators

| Label | Color | Function | Description | |
|---|---|---|---|---|
| BAT[1)] | Green/Red | Ready/Error | LED off | **Possible causes:**<br>• The voltage of the installed backup battery is within the tolerance range, but an EnDat encoder with battery backup is not connected.<br>• An EnDat encoder with backup battery is connected and registering "Battery OK", but the module's firmware version does not support EnDat encoders with battery backup. |
| | | | Solid green | An EnDat encoder with battery backup is connected and registering "Battery OK" (voltage of the installed backup battery is within the tolerance range). |
| | | | Solid red | An EnDat encoder with battery backup is connected and registering "Battery not OK".<br>**Possible causes:**<br>• Voltage of the installed backup battery outside of tolerance range<br>• No backup battery installed in module |

Table 6: Backup battery - LED status indicators

1) Status indicator group "Backup battery status" is only available for modules with an integrated battery holder. Starting with a certain revision, the integrated battery holder is not included and using accessory kit 8BXB000.0000-00 (battery for encoder buffering) is no longer possible. For details, see the revision information of the respective module (www.br-automation.com).

## 5.5 Status changes when starting up the operating system loader

The following intervals are used for the LED status indicators:

Width of box: 50 ms
Repeats after: 3,000 ms

| Status | LED | Display |
|---|---|---|
| 1. Boot procedure for base hardware active | RDY | |
| | RUN | |
| | ERR | |
| 2. Network configuration active | RDY | |
| | RUN | |
| | ERR | |
| 3. Waiting for network telegram | RDY | |
| | RUN | |
| | ERR | |
| 4. Network communication active | RDY | |
| | RUN | |
| | ERR | |
| 5. ACOPOS operating system being transferred/burned [1)] | RDY | |
| | RUN | |
| | ERR | |

Table 7: Status changes when starting up the operating system loader

1) Firmware V2.140 and later.

## 5.6 POWERLINK node number setting Inverter modules

The POWERLINK node number can be set using the two hexadecimal coded rotary switches located behind the module's black cover.

| Figure | | Coded rotary switches | POWERLINK node number |
|---|---|---|---|
|  |  | 1 | 16s position (high) |
| Cover closed | Cover open | 2 | 1s position (low) |
| | | A change to the POWERLINK node number only takes effect the next time the ACOPOSmulti drive system is switched on. | |

**Information:**

**In principle, node numbers between $01 and $FD are permitted.**
**However, node numbers between $F0 and $FD are intended for future system expansions. To ensure compatibility, these node numbers should be avoided.**

**Node numbers $00, $FE and $FF are reserved and are therefore not permitted to be set.**

Table 8: Setting the POWERLINK node number

# 6 Dimension diagram and installation dimensions

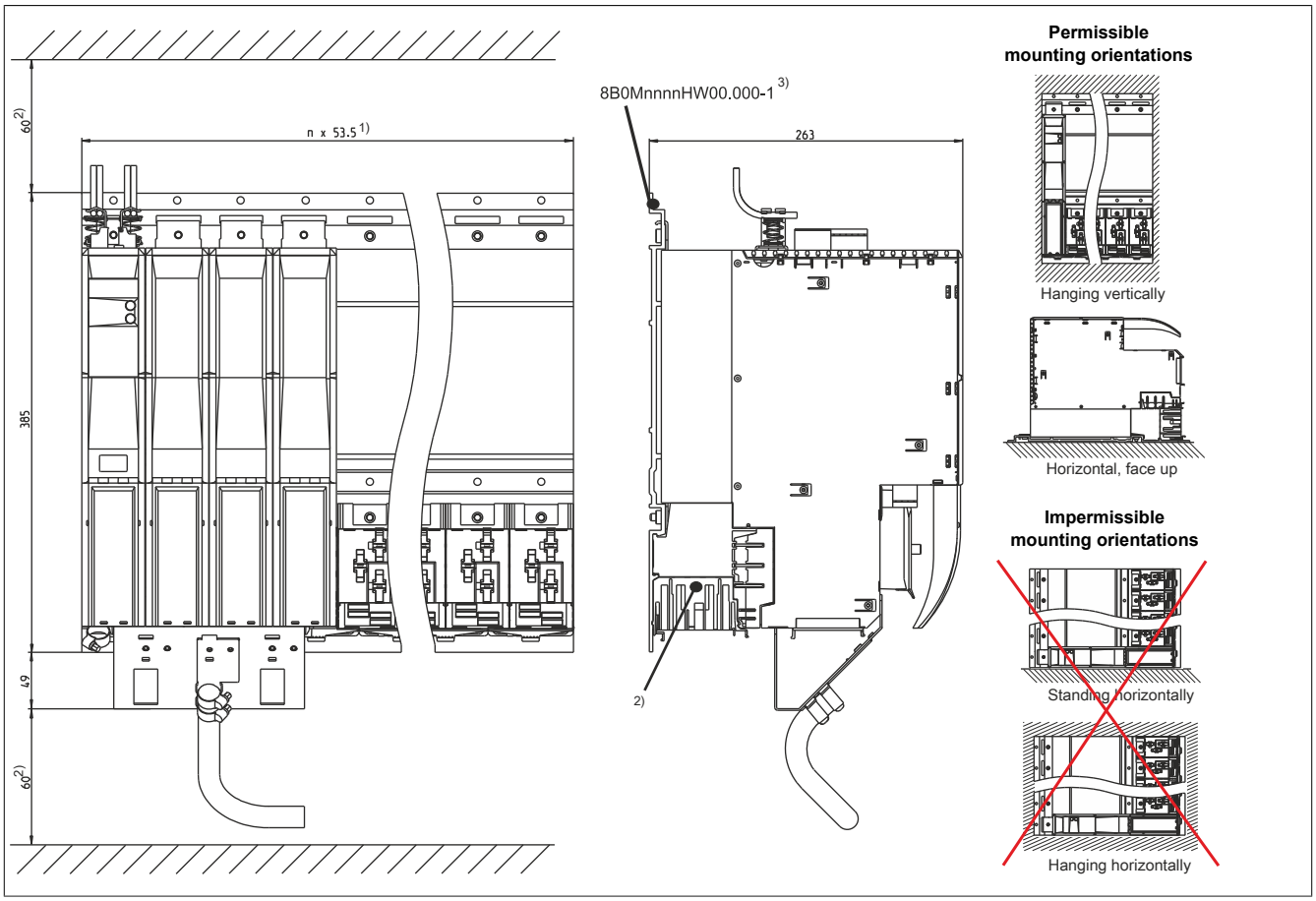


Figure 4: Dimension diagram and installation dimensions

1) n... Number of width units on the mounting plate
2) For sufficient air circulation, a clearance of at least 60 mm must be provided above the mounting plate and below the module.
**To ensure that the fan modules in the mounting plate can be replaced easily, at least 250 mm clearance must be available below the module.**
3) nnnn indicates the number of slots (e.g. 0160 refers to 16 slots).

# 7 Wiring

## 7.1 Pinout overview

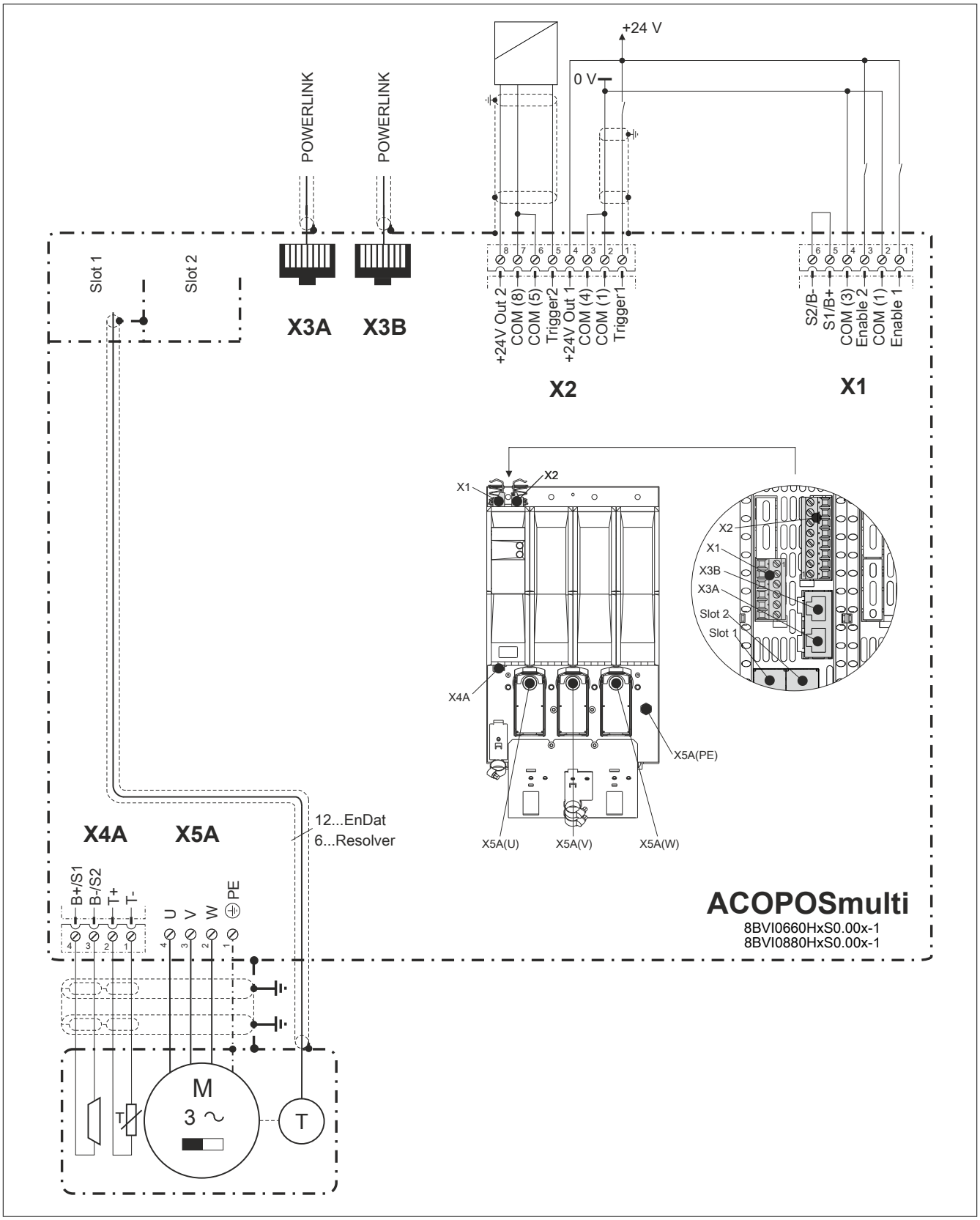


Figure 5: Pinout overview

### 7.1.1 X1 - Pinout

| X1 | Pin | Description | Function |
|---|---|---|---|
| 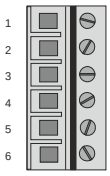<br>8TB2106.2010-00 | 1 | Enable 1 1) | Axis 1: Enable 1 |
| | 2 | COM (1) | Axis 1: Enable 1 0 V |
| | 3 | Enable 2 1) | Axis 1: Enable 2 |
| | 4 | COM (3) | Axis 1: Enable 2 0 V |
| | 5 | S1/B+ 2) | Axis 1: Brake + / Activation of the external holding brake |
| | 6 | S2/B- 2) | Axis 1: Brake - / Activation of the external holding brake |

Table 9: Connector X1 - Pinout

1) Wiring is not permitted to exceed a total length of 30 m.
2) If the connection is used to activate the external holding brake (S1/S2), then the wiring is not permitted to exceed a total length of 3 m.
If the holding brake is connected via an additional external relay contact (ground-in e.g. via connections S1/S2) instead of only via the internal transistor, then the internal quenching circuit has no effect! In this case, the customer must make sure that neither the relay contact nor the braking coil are damaged when switching off the brake. This can be done by interconnecting the coil or - better still - interconnecting the contact with a quenching circuit.

#### 7.1.1.1 Wiring the connections for the motor holding brake

**Activation of the motor holding brake internally by the ACOPOSmulti inverter module**

| Holding brake connected to connector X4A | Holding brake connected to connector X1 | Description |
|---|---|---|
| 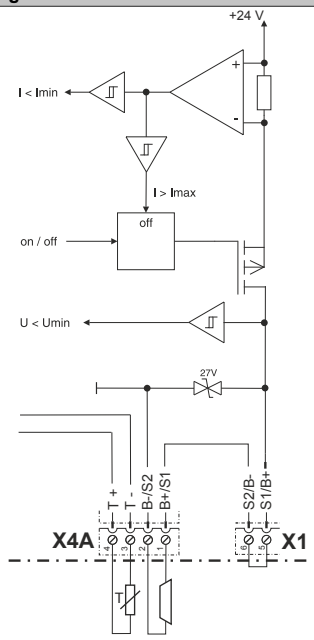<br>**Information:**<br>**A jumper must be placed between connections S1/B+ and S2/B- on connector X1.** | 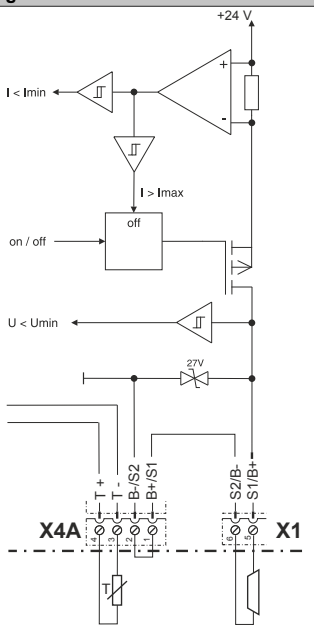<br>**Information:**<br>**A jumper must be placed between connections B+/S1 and B-/S2 on connector X4A.** | • **Power supply:**<br>Internally by ACOPOSmulti inverter module<br>• **Enabling:**<br>Internally by ACOPOSmulti inverter module<br>• **Monitoring:**<br>Internally by ACOPOSmulti inverter module |

Table 10: Activation of the motor holding brake internally

### Activation of the motor holding brake internally by the ACOPOSmulti inverter module and/or externally by dry contacts

| Holding brake connected to connector X4A | Holding brake connected to connector X1 | Description |
|---|---|---|
| 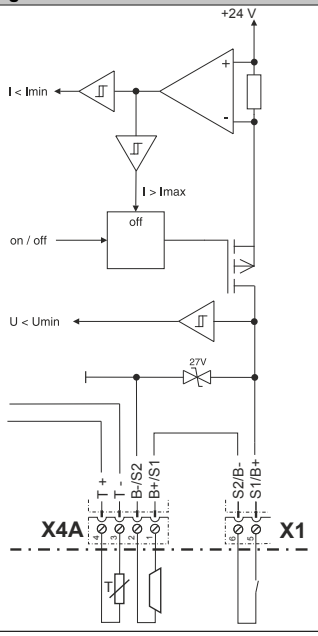 | 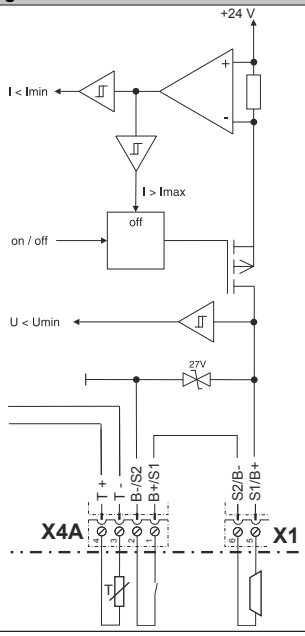 | • **Power supply:** Internally by ACOPOSmulti inverter module<br>• **Enabling:** Internally by the ACOPOSmulti inverter module and/or externally by dry contacts[1)]<br>• **Monitoring:** Internally by ACOPOSmulti inverter module<br>**Information:**<br>**Internal monitoring by the ACOPOSmulti inverter module must be configured according to the requirements of the application.[2)]** |



Table 11: Activation of the motor holding brake internally and/or externally

1) Activation of the holding brake via external safety circuits is thus possible independently of the control integrated in the ACOPOSmulti inverter.
2) Configuration takes place using ParID 90 (1 ... Internal monitoring active, 5 ... Internal monitoring not active).

### 7.1.2 Connector X2 - Pinout

| X2 | Pin | Description | Function |
|---|---|---|---|
| 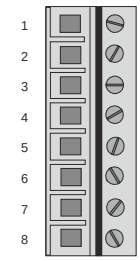<br>8TB2108.2010-00 | 1 | Trigger1 | Trigger 1 |
| | 2 | COM (1) | Trigger 1 0 V |
| | 3 | COM (4) | +24 V output 1 0 V |
| | 4 | +24 V Out 1 | +24 V output 1 |
| | 5 | Trigger2 | Trigger 2 |
| | 6 | COM (5) | Trigger 2 0 V |
| | 7 | COM (8) | +24 V output 2 0 V |
| | 8 | +24 V Out 2 | +24 V output 2 |

Table 12: Connector X2 - Pinout

### 7.1.3 Connectors X3A, X3B - Pinout

| X3A, X3B | Pin | Name | Function |
|---|---|---|---|
|  | 1 | RXD | Receive signal |
| | 2 | RXD\ | Receive signal inverted |
| | 3 | TXD | Transmit signal |
| | 4 | Shield | Shield |
| | 5 | Shield | Shield |
| | 6 | TXD\ | Transmit signal inverted |
| | 7 | Shield | Shield |
| | 8 | Shield | Shield |

Table 13: X3A, X3B connectors - Pinout

### 7.1.4 Connector X4A - Pinout

| X4A | Description | Function |
|---|---|---|
| 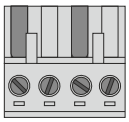 8TB2104.203L-00 | T- | Axis 1: Temperature sensor - |
| | T+ | Axis 1: Temperature sensor + |
| | B-/S2 1) | Axis 1: Brake - / Activation of the external holding brake |
| | B+/S1 1) | Axis 1: Brake + / Activation of the external holding brake |

Table 14: Connector X4A - Pinout

1) If the connection is used to activate the external holding brake (S1/S2), then the wiring is not permitted to exceed a total length of 3 m.
If the holding brake is connected via an additional external relay contact (ground-in e.g. via connections S1/S2) instead of only via the internal transistor, then the internal quenching circuit has no effect! In this case, the customer must make sure that neither the relay contact nor the braking coil are damaged when switching off the brake. This can be done by interconnecting the coil or - better still - interconnecting the contact with a quenching circuit.

## Danger!

**The connections for the motor temperature sensors and the motor holding brake are safely isolated circuits. As a result, only devices or components that have at least safe isolation per IEC 60364-4-41 or EN 61800-5-1 are permitted to be connected to these connections.**

## Caution!

**If B+ and B- are swapped when connecting the permanent magnet holding brakes, then the brakes cannot be opened! ACOPOSmulti inverter modules cannot determine if a holding brake is connected with reverse polarity!**

## Warning!

**Temperature sensors are only permitted to be connected to the X4A/T+ and X4A/T- connectors on an ACOPOSmulti module under the following conditions:**

- **SLOT1 of the ACOPOSmulti module does not contain an ACOPOSmulti plug-in module to which a temperature sensor is connected on the T+ and T- connections.**

**Otherwise, the temperature monitoring functions on the ACOPOSmulti module may become ineffective, which in extreme cases can cause the hardware (e.g. motors) connected to the ACOPOSmulti module to be destroyed!**

**Connections T+ and T- are not required when using 8BCHxxxx hybrid motor cables.**

### 7.1.4.1 Wiring the connections for the motor holding brake

**Activation of the motor holding brake internally by the ACOPOSmulti inverter module**

| Holding brake connected to connector X4A | Holding brake connected to connector X1 | Description |
|---|---|---|
| 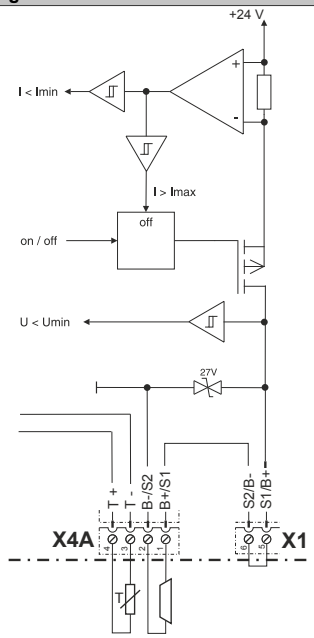 **Information:** **A jumper must be placed between connections S1/B+ and S2/B- on connector X1.** | 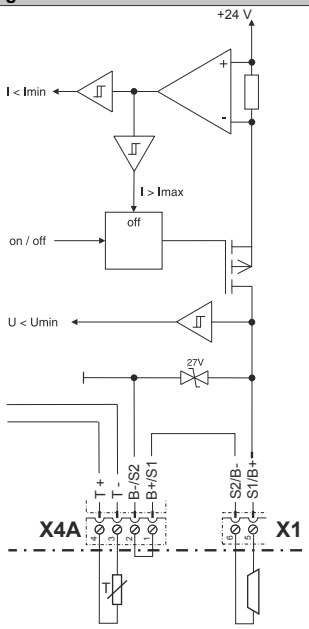 **Information:** **A jumper must be placed between connections B+/S1 and B-/S2 on connector X4A.** | • **Power supply:** Internally by ACOPOSmulti inverter module<br>• **Enabling:** Internally by ACOPOSmulti inverter module<br>• **Monitoring:** Internally by ACOPOSmulti inverter module |

Table 15: Activation of the motor holding brake internally

**Activation of the motor holding brake internally by the ACOPOSmulti inverter module and/or externally by dry contacts**

| Holding brake connected to connector X4A | Holding brake connected to connector X1 | Description |
|---|---|---|
| 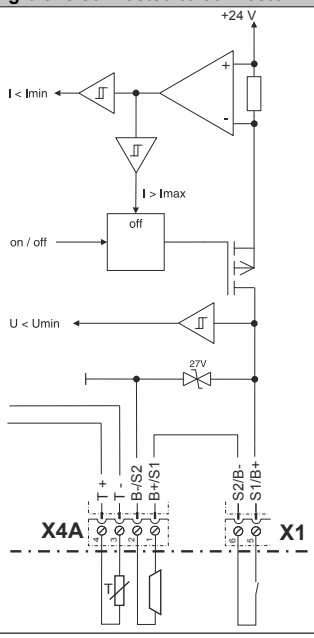 | 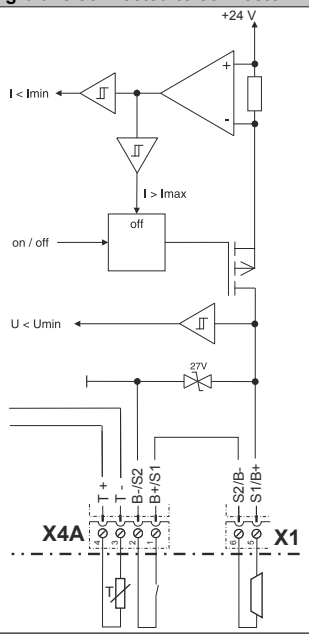 | • **Power supply:** Internally by ACOPOSmulti inverter module<br>• **Enabling:** Internally by the ACOPOSmulti inverter module and/or externally by dry contacts[1)]<br>• **Monitoring:** Internally by ACOPOSmulti inverter module<br>**Information:** **Internal monitoring by the ACOPOSmulti inverter module must be configured according to the requirements of the application.[2)]** |

Table 16: Activation of the motor holding brake internally and/or externally

1) Activation of the holding brake via external safety circuits is thus possible independently of the control integrated in the ACOPOSmulti inverter.
2) Configuration takes place using ParID 90 (1 ... Internal monitoring active, 5 ... Internal monitoring not active).

### 7.1.5 X5A - Pinout

| X5A | Pin | Description | Function |
|---|---|---|---|
| 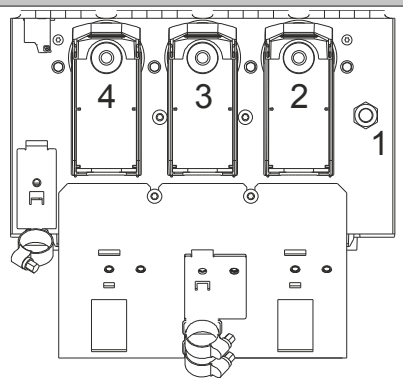 | 1 | PE | Axis 1: Protective ground conductor |
| | 2 | W | Axis 1: Motor connection W |
| | 3 | V | Axis 1: Motor connection V |
| | 4 | U | Axis 1: Motor connection U |
| Tightening torque for the M8 nuts: 12 Nm | | | |

Table 17: X5A - Pinout

### Motor connections U, V, W - Cable installation

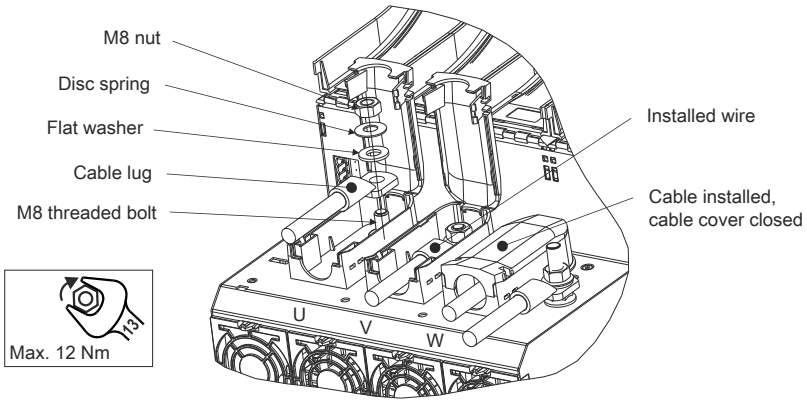


Figure 6: Motor connections U, V, W - Cable installation

### PE connection (1-wire) - Cable installation

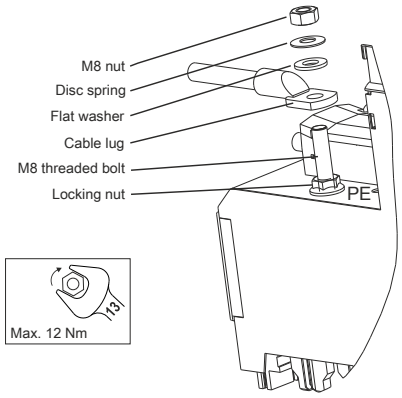


PE connection (1-wire) - Overview of installation material

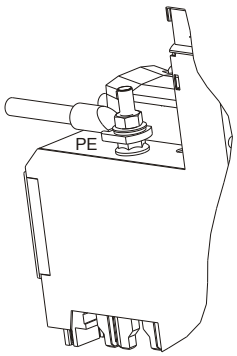


Installed wire

Table 18: PE connection (1-wire) - Cable installation

## PE connection (3-wire) - Cable installation

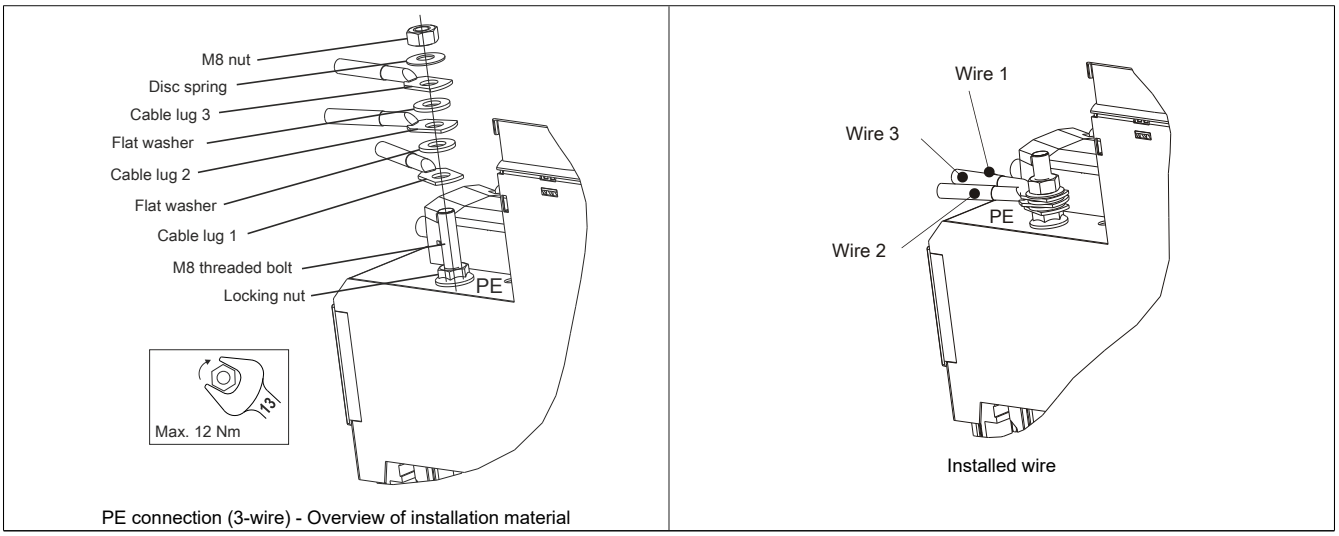


Table 19: PE connection (3-wire) - Cable installation

### 7.1.6 Input/Output circuit diagram

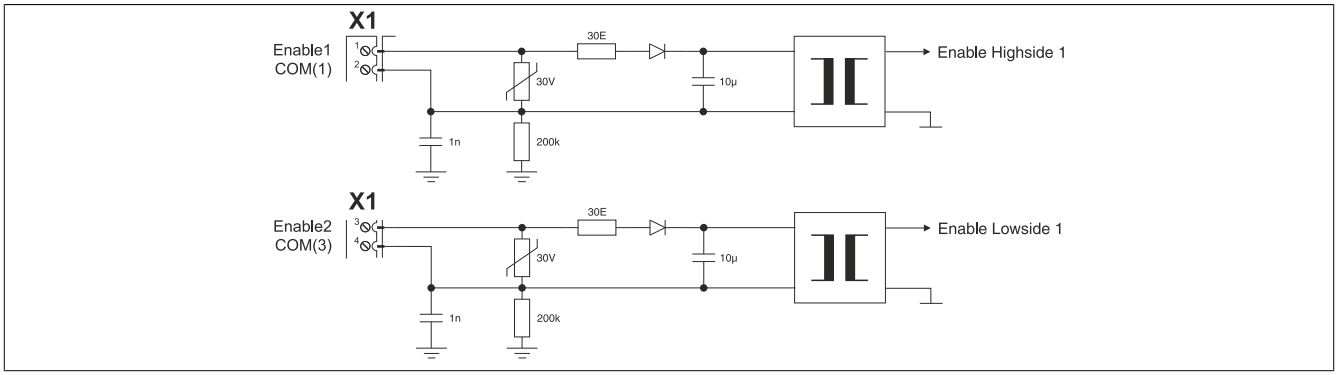


Figure 7: Enable

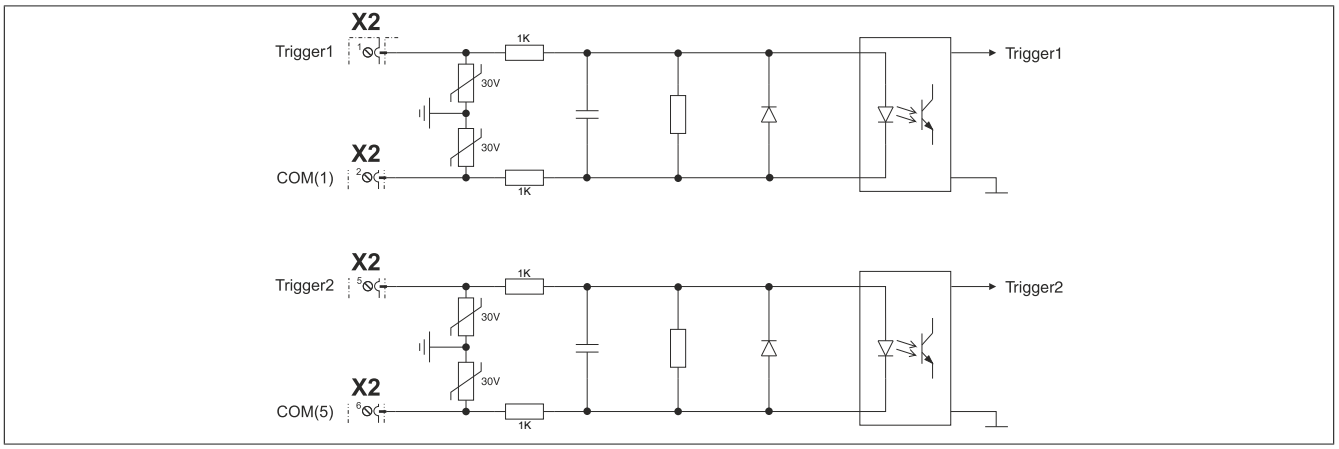


Figure 8: Trigger inputs

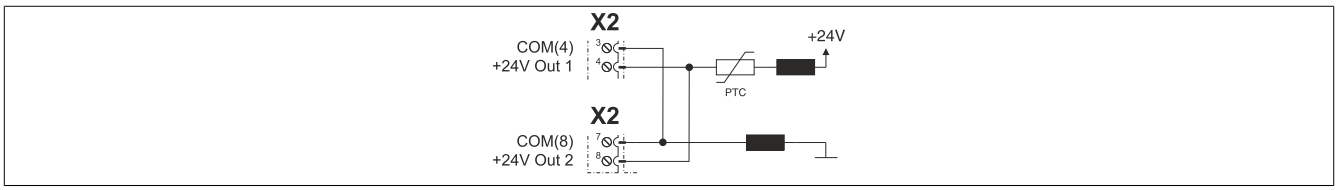


Figure 9: 24 VDC out

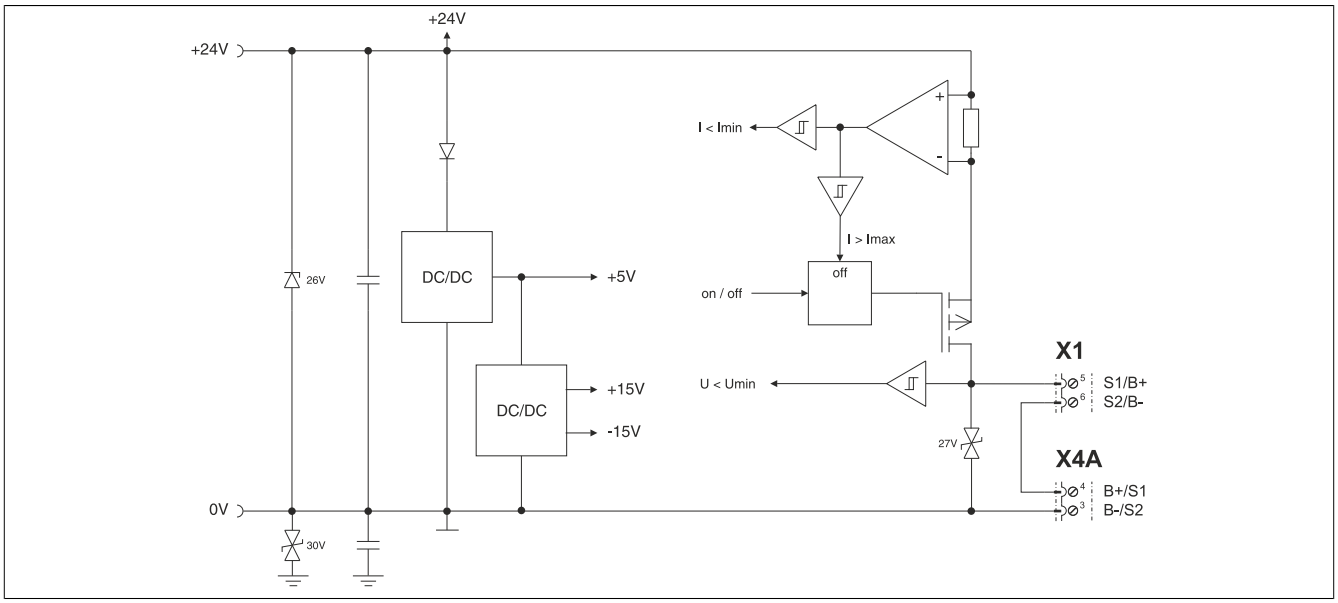


Figure 10: Holding brake

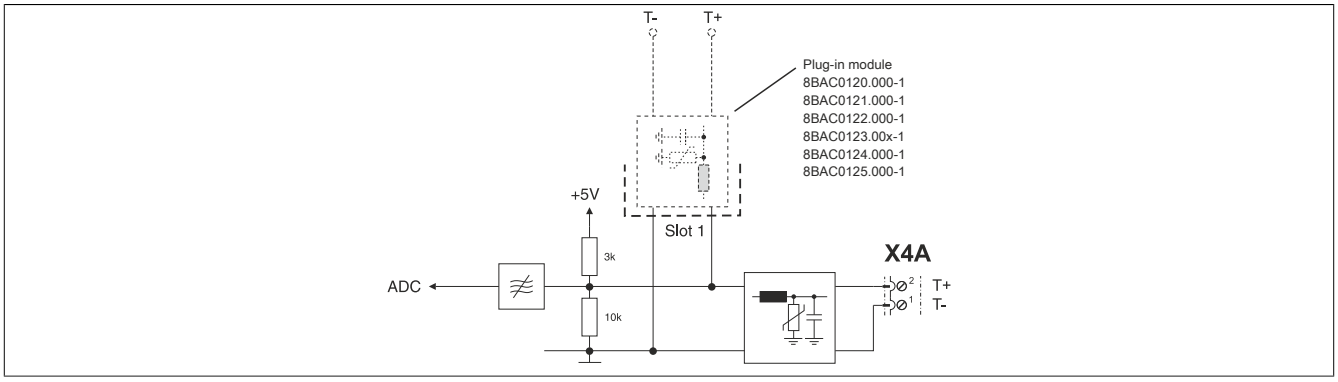


Figure 11: Temperature sensor

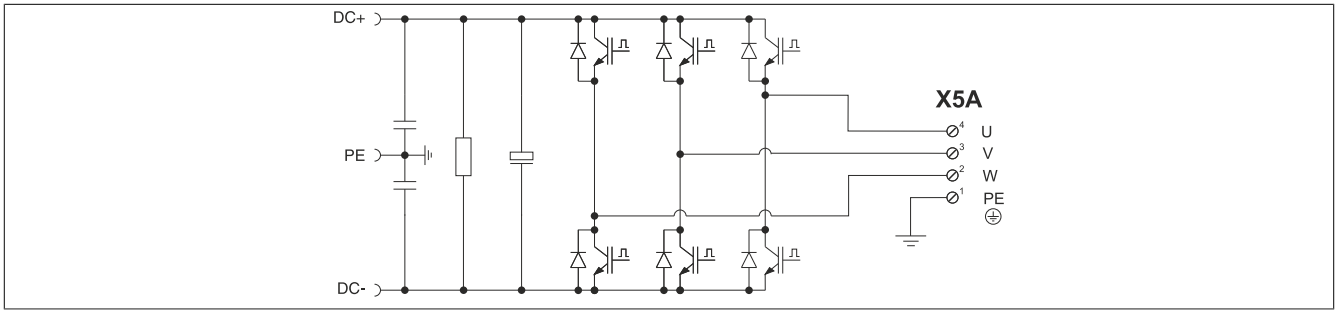


Figure 12: Motor