Krones part number	0900083465
Marking	Ball valve
Manufacturer type – no.	-
Manufacturer part – no.	G 827 300 923

Gehmeyr
Technischer Vertrieb



warning!

Not for new construction!

Feature	**Values**
Size	2“
Actuator	Pneumatic actuator
Assembly position	any
Design structure	Ball valve
Function	3/2
Materials information - housing	stainless 1.4408
Seal	PTFE
Inlet pressure	max 40 bar
Inlet pressure (actuator)	max 10 bar
Nominal width	DN 40
Operating medium	Compressed air
Medium – Ambient temperatur	0 - + 50 °C
Pneumatic connection 1	G 2“
Pneumatic connection 2	G 2“
Pneumatic connection 3	G 2“
Pneumatic connection 4 (actuator)	G ¼“

errors excepted ! 12.6.08 Mt.

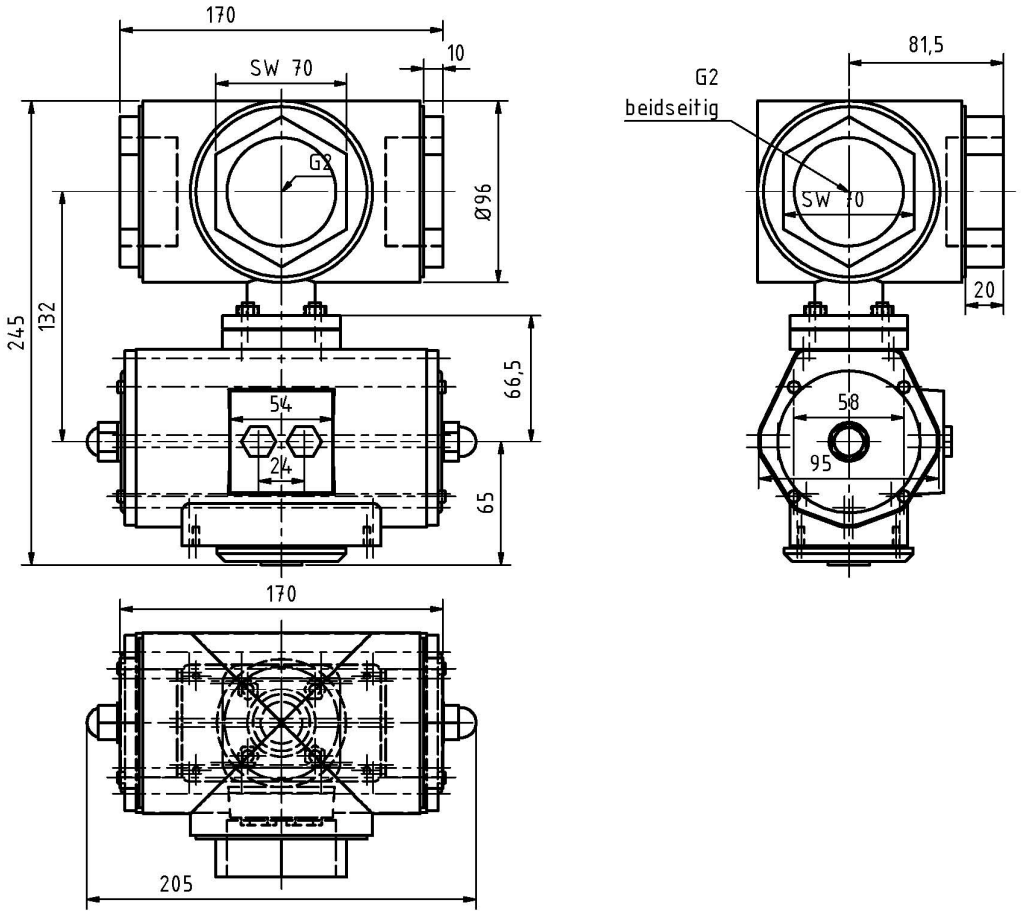
170
SW 70
10
G2
Ø96
245
132
66,5
54
24
65
170
205
81,5
G2
beidseitig
SW 70
20
58
95