VMR
VML
VMM

Safety solenoid valve for gas
Fast or slow opening, fast closing
Stand-alone or double valve options
1/4” ... 6”

N Version, for the North American Market

VMR
VML
VMM

Safety solenoid valves for gas

Fast and slow opening, fast closing
Stand-alone or double valve options

Contents

Description	2
Features	2
Functioning and Application	3
Technical Specifications	5
Gas Flow Chart (Pressure Drop)	11
Selection Guide	15
Special Versions and Options	21
Design, Installation and Servicing	23
Standards and Approvals	24

Description

The VMR is a fast opening single-stage solenoid valve, normally closed (open when energized).
The VML is a slow opening single-stage solenoid valve, normally closed (open when energized).
The VMM is a combination of two solenoid valves in a single compact and versatile valve housing.

This type of device is suitable for air or gas blocking and releasing controls (with one or two stages operation), required in gas power burners, atmospheric gas boilers, industrial kilns and other gas consuming appliances.

Features

The valves are made of aluminum alloy die-cast (or hot-pressed brass for OTN versions), with a wide range for inlet/outlet connections from 1/4” up to 6”.

Pipe connections meet group 2 and backpressure sealing is compliant with class A, according to EN 161 requirements. Sealings are made of NBR-based rubber certified for use with gas (EN 549).

Suitable for use with air and non-aggressive gases included in the 1, 2 and 3 families (EN 437). Special versions for aggressive gases* (Biogas, COG).

The valve is open only when energized: if, for any reason, the power supply goes down, the valve closes immediately (intrinsic safe).

Suitable for heavy-duty cycle operation and qualified for continuous service (100% ED). Equipped with flow rate adjustment up to 3 inch size (except brass models and 2-1/2 & 3” 24V models).

An incorporated fine mesh filter protects the valve seat and disc as well as downstream components and prevents dirt contamination (except brass models and 90 PSI).

Provided with 1/4” tap on both sides of the inlet chamber (except brass models) to connect manometers, pressure switches, a leakage tester or other gas equipment. Models with pipe size 1-1/4” and larger are provided with taps also in the outlet chamber.

The coils are provided with terminal box or with ISO 4400 plug. Both systems are provided with suitable cable gland to avoid water and dirt contamination.

All components are designed to withstand any mechanical, chemical, and thermal condition occurring during typical service. Effective impregnation and surface treatments have been used to improve mechanical sturdiness, sealing and resistance to corrosion of the components.

Valves are 100% tested by computerized testing machines and are fully warranted.

*Compatibility of gas contents and valve materials to be checked by our Technical Department.

Functioning and Application VMR, VML

The VMx type valve is a safety shutting device using an external power supply. When it is de-energized, the spring pushes on the seal disc, keeping the gas passage closed. When the inlet chamber is closed and pressurized, the gas line pressure also forces on the disc, increasing the closing function and improving the seal.

When the coil is powered, the valve opens (rapidly: VMR; slowly: VML) against the strength of the spring and gas pressure. The flow may be adjusted using the regulating screw on the top (see the installation and service instructions).

If the power supply is shut off, the valve rapidly closes, interrupting gas flow.

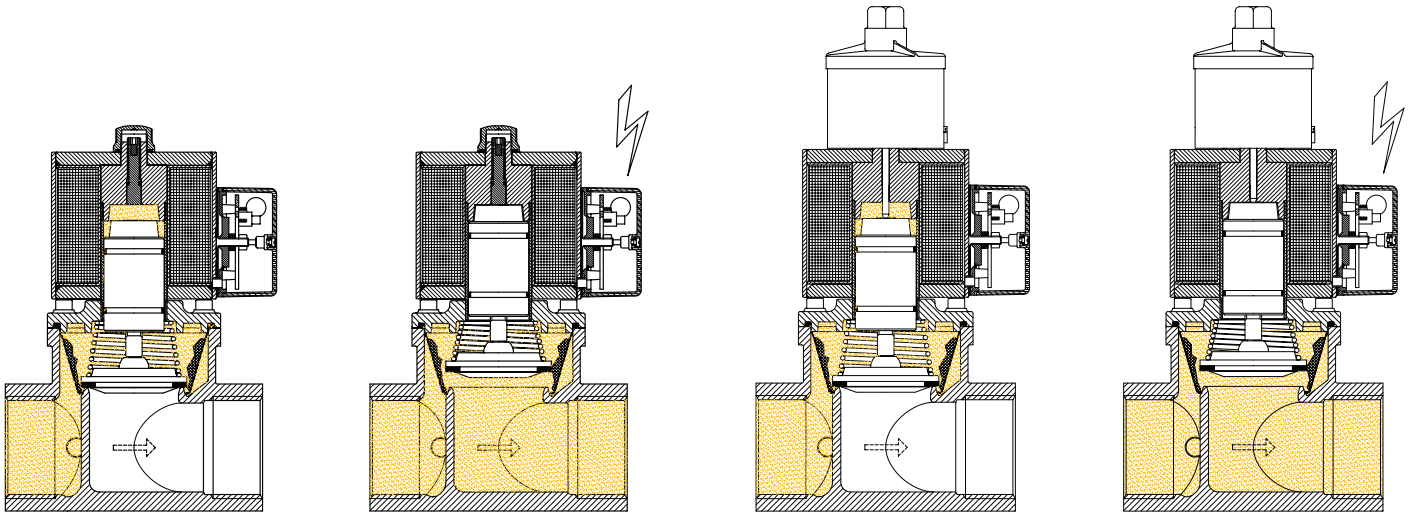

Fig. 1

This kind of valve is normally installed as a safety and regulating device in gas trains, for industrial applications, and in gas-firing systems.

Figure 2 shows an example of installation.

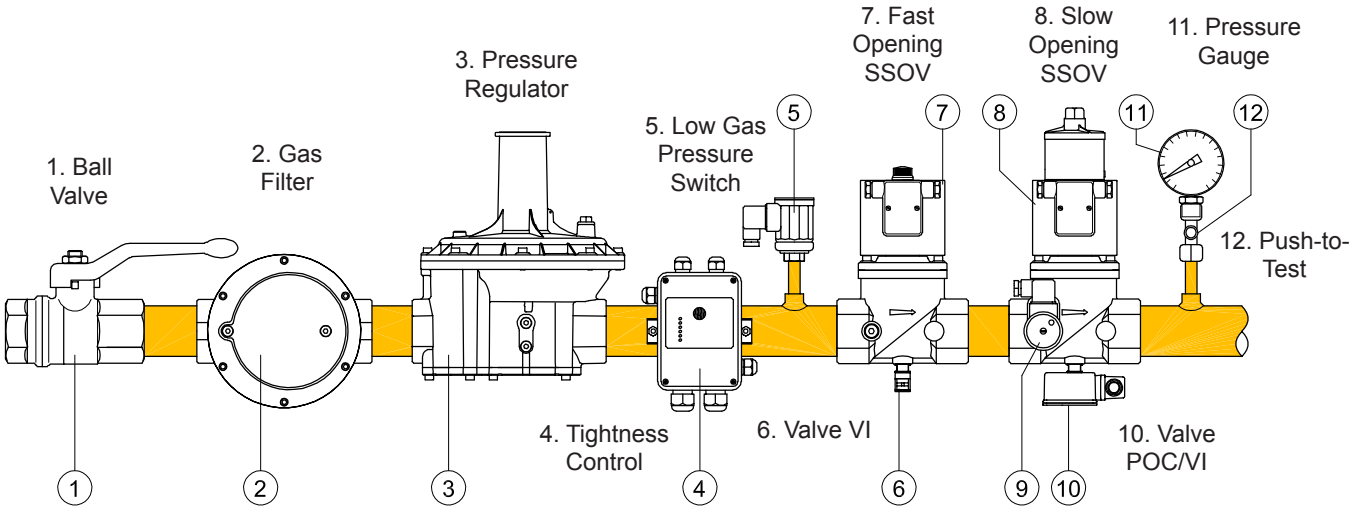

Fig. 2

Functioning and Application VMM

The VMM type valve is a safety shutting device using an external power supply.
The first valve (A) is a fast opening safety solenoid valve. When it is de-energized, the spring pushes on the seal disc, keeping the gas passage closed. When the inlet chamber is closed and pressurized, the gas line pressure also forces on the disc, increasing the closing function and improving the seal.
When the coil is powered the valve opens rapidly, against the strength of the spring and gas pressure.
If the power supply is shut off, the valve rapidly closes, interrupting the gas flow.
The second valve (B) may be either fast opening or slow opening. Both valves (A) and (B) have flow adjustment.
It is possible to connect a third bypass valve (C), which works as a pilot valve.

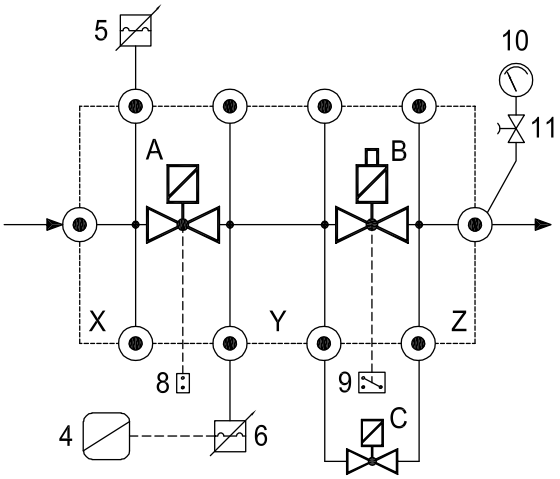

1 = Ball valve
2 = Filter
3 = Pressure Regulator
4 = Tightness Control
5 = Low Gas Pressure Switch
6 = TC Pressure Switch
7 = Double SSOV
8 = Visual Indication
9 = Proof of Closure/VI
10 = Pressure Gauge
11 = Push-to-Test

A = First Valve
B = Second Valve
C = Bypass Valve
X = Inlet Chamber
Y = Middle Chamber
Z = Outlet Chamber

Fig. 3

This kind of valve is normally installed as a safety and regulating device on gas trains, for industrial applications, and in gas-firing systems.

Figure 4 shows an example of installation.

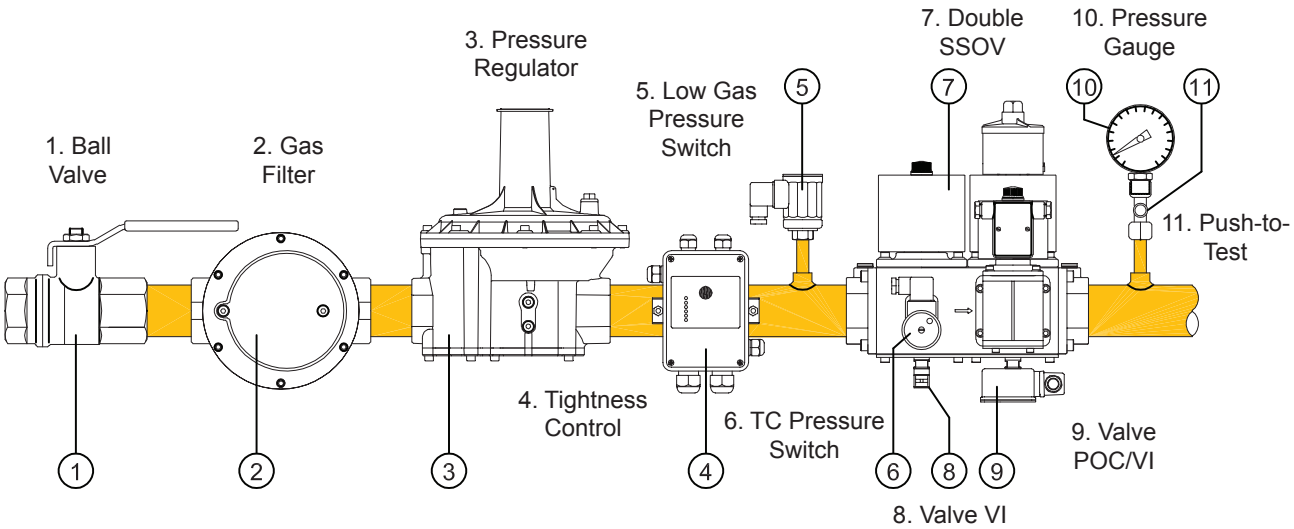

Fig. 4

Technical Specifications VMR, VML

Tab. 1

Connections	Internal threaded ANSI-ASME B1.20 from 1/4” to 2-1/2” NPT Flanged ANSI-ASA-ASME B16.5 class 150 from 2” to 6”
Voltage ratings	230 VAC 50/60 Hz 120 VAC 50/60 Hz 110 VAC 50/60 Hz 24 VAC/DC (See selection notes for versions; in sizes >1”, specify AC or DC) 12 VAC/DC (VMR 3 PSI version only; 12V AC not available for VMR..OTN)
Voltage tolerance	-15% to +10%
Ambient temperature	+5°F to +140°F
Max. operating pressure /Max. body pressure	3 PSI /15 PSI 5 PSI /15 PSI 7.25 PSI /15 PSI 90 PSI /100 PSI (Note: Min. inlet pressure is 80.4” wc for 3/8 & 1/2” models.)
Closing time	< 1 second
Opening time	< 1 second (VMR); Adjustable (VML)
Min. cycle time	VMR/VMM: 3 sec. ON, 3 sec. OFF (10 cycles per minute) VML/VMM: 7 sec. ON, 3 sec. OFF (6 cycles per minute)
Gas strainer	600 µm (0.02 in), metal mesh (not included with OTN and 90 PSI models)
Enclosure	IP54 (IP65 available as an option)
Cable gland	M20x1.5 for terminal box; PG 9 for ISO plug (power); PG 11 for POC plug
Wire cross-section	2.5 mm^2 max. (AWG 12) for terminal board 1.5 mm^2 max. (AWG 14) for ISO plug
Electrical safety	Class I (EN 60335-1) *accessible, conductive electrical parts are grounded*
Coil winding insulation	Class H (392°F) *temp. rating of the insulation on wire used in winding of the coil*
Coil thermal resistance	Class F (311°F) *temp. rating of coil insulation material, other than wire*

Tab. 2

Power Consumption [W]		**3 PSI**					**5 PSI**					**7.25 PSI**					**90 PSI**				
		230V	120V	110V	24V	12V	230V	120V	110V	24V	12V	230V	120V	110V	24V	12V	230V	120V	110V	24V	12V
1/4” OTN	O	12	15	12	12	12	-	-	-	-	-	-	-	-	-	-	-	-	-	-	-
	H	12	15	12	12	12	-	-	-	-	-	-	-	-	-	-	-	-	-	-	-
3/8”-1/2” OTN	O	16	20	16	16	16	-	-	-	-	-	-	-	-	-	-	-	-	-	-	-
	H	16	20	16	16	16	-	-	-	-	-	-	-	-	-	-	-	-	-	-	-
3/8” - 1/2”	O	25^	20	25^	20	20	-	-	-	-	-	20	20	20	-	-	20	20	20	20§	-
	H	25^	5	25^	20	20	-	-	-	-	-	20	5	20	-	-	20	5	20	20§	-
3/4” - 1”	O	25†	35‡	30†	30	30	-	-	-	-	-	35	45	35	-	-	35	45	35	30§	-
	H	25†	9°	30†	30	30	-	-	-	-	-	35	11	35	-	-	35	11	35	30§	-
1-1/4” - 1-1/2” - 2”	O	120*	80*	80*	65	65	-	-	-	-	-	180	180	180	-	-	180	180	180	65§	-
	H	30‡	20‡	20‡	65	65	-	-	-	-	-	45	45	45	-	-	45	45	45	65§	-
2-1/2” - 3”	O	180	180	180	160	-	280	280	280	-	-	-	-	-	-	-	280	280	280	-	-
	H	45	45	45	15	-	70	70	70	-	-	-	-	-	-	-	70	70	70	-	-
4”	O	280	280	280	210	-	320	320	320	-	-	-	-	-	-	-	320	320	320	-	-
	H	70	70	70	20	-	80	80	80	-	-	-	-	-	-	-	80	80	80	-	-
5” - 6”	O	320	360	320	-	-	360	360	360	-	-	-	-	-	-	-	-	-	-	-	-
	H	80	90	80	-	-	90	90	90	-	-	-	-	-	-	-	-	-	-	-	-

O — opening power consumption H — holding power consumption VML: ° = 11; ^ = 20; † = 35; ‡ = 45; * = 180; § = N/A

Technical Specifications VMM

Tab. 3

Connections	Internal threaded ANSI-ASME B1.20 from 3/4” to 2” NPT Flanged ANSI-ASA-ASME B16.5 class 150 from 2” to 3”
Bypass size	1/2” or 1”
Voltage ratings	230 VAC 50/60 Hz 120 VAC 50/60 Hz 110 VAC 50/60 Hz 24 VAC/DC (3 PSI versions only; AC not available for 2-1/2, 3”)
Voltage tolerance	-15% to +10%
Power consumption	70W for 3/4” — 1” 90W (working) for 1-1/4” — 3” 25W for 1/2” bypass 35W for 1” bypass
Ambient temperature	+5°F to +140°F
Max. operating pressure	3 PSI 7.25 PSI
Max. body pressure	15 PSI
Closing time	< 1 second
Opening time	Adjustable
Threaded plug ports	1/4” (additional 1/8” ports on flanged models)
Gas strainer	600 µm (0.02 in), metal mesh
Enclosure	IP54 Optional: IP65
Cable gland	M20x1.5 for terminal box PG 9 for ISO plug (power); PG 11 for POC plug
Wire cross-section	2.5 mm^2 max. (AWG 12) for terminal board 1.5 mm^2 max. (AWG 14) for ISO plug
Electrical safety	Class I (EN 60335-1) *accessible, conductive electrical parts are grounded*
Coil winding insulation	Class H (392°F) *temp. rating of the insulation on wire used in winding of the coil*
Coil thermal resistance	Class F (311°F) *temp. rating of coil insulation material, other than wire*

Dimensions
VMR

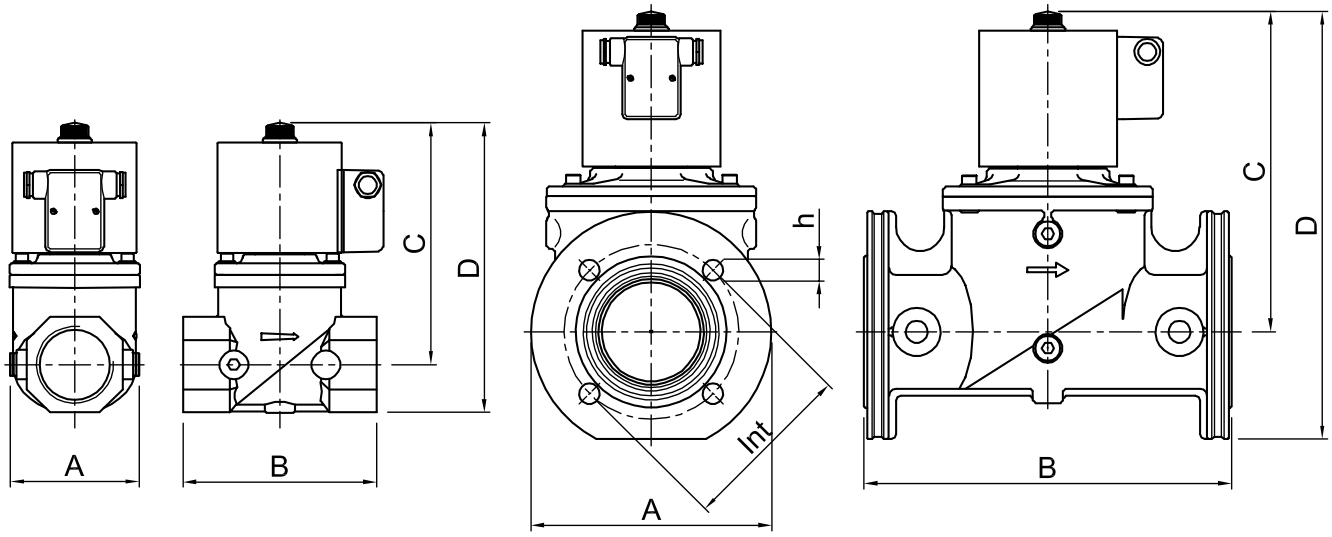

Fig. 5

Tab. 4

Material and connections		Overall dimensions [inches]						Weight [lbs]
CuZn	AISi	A	B	C	D	Int	h	
1/4” NPT		1.18	1.81	2.62	2.95	-	-	0.59
3/8” NPT		1.18	2.36	3.74	4.33	-	-	0.88
1/2” NPT		1.18	2.36	3.74	4.33	-	-	0.88
	3/8” NPT	3.46	3.03	4.96	5.59	-	-	3.08
	1/2” NPT	3.46	3.03	4.96	5.59	-	-	3.08
	3/4” NPT	3.46	3.78	5.71	6.61	-	-	5.51
	1” NPT	3.46	3.78	5.71	6.61	-	-	5.51
	1-1/4” NPT	4.72	6.02	7.52	8.82	-	-	12.56
	1-1/2” NPT	4.72	6.02	7.52	8.82	-	-	12.56
	2” NPT	4.17	6.14	7.68	9.21	-	-	13.22
	2-1/2” NPT	7.09	8.58	10.00	11.81	-	-	25.57
	2” ANSI [1]	6.50	7.72	7.68	10.94	4.75	4 x 3/4	17.19
	2-1/2” ANSI	7.87	12.01	10.47	13.98	5.50	4 x 3/4	30.86
	3” ANSI	7.87	12.01	10.47	13.98	6.00	4 x 3/4	30.86
	4” ANSI	9.84	13.86	13	18.13	7.50	8 x 3/4	72.75
	5” ANSI	12.20	18.11	16.93	23.62	8.50	8 x 7/8	127.86
	6” ANSI	12.20	18.11	16.93	23.62	9.50	8 x 7/8	132.27

([1]) Flanged connection kit

Dimensions
VML

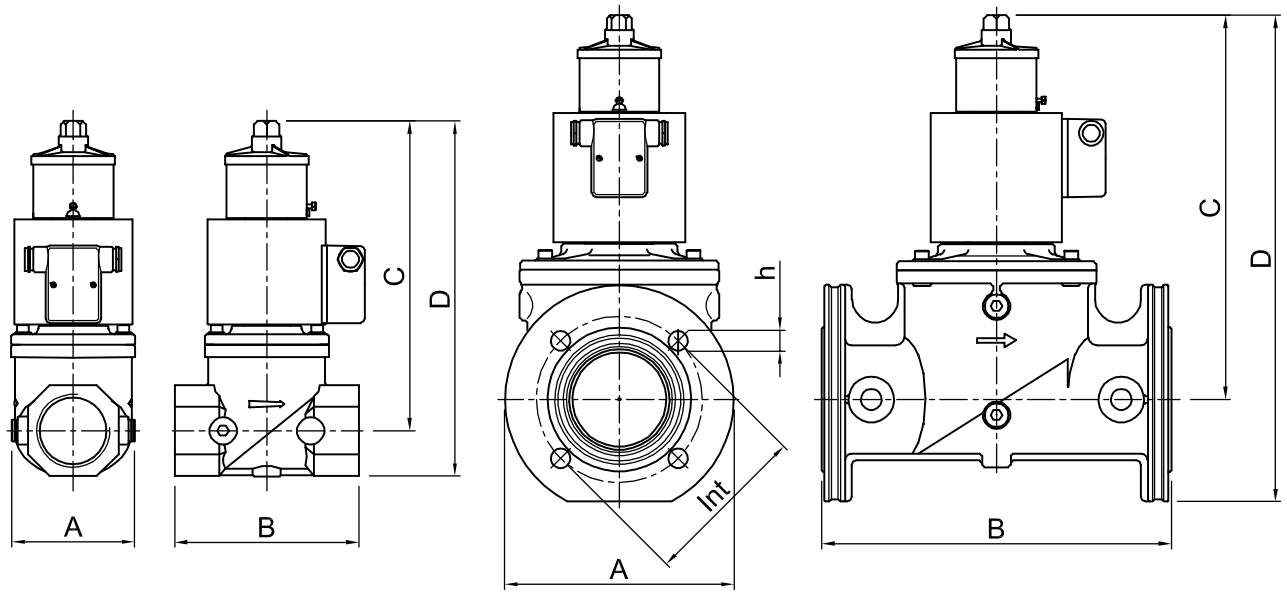

Fig. 6

Tab. 5

Material and connections	Overall dimensions [inches]						Weight [lbs]
AISi	A	B	C	D	Int	h	
3/8” NPT	3.46	3.03	7.09	7.72	-	-	3.97
1/2” NPT	3.46	3.03	7.09	7.72	-	-	3.97
3/4” NPT	3.46	3.78	7.87	8.74	-	-	5.95
1” NPT	3.46	3.78	7.87	8.74	-	-	5.95
1-1/4” NPT	4.72	6.02	10.28	11.57	-	-	13.67
1-1/2” NPT	4.72	6.02	10.28	11.57	-	-	13.67
2” NPT	4.17	6.14	10.43	11.97	-	-	14.33
2-1/2”	7.09	8.58	12.76	14.57	-	-	26.68
2” ANSI [1]	6.50	7.72	10.43	13.70	4.75	4 x 3/4	18.30
2-1/2” ANSI	7.87	12.01	13.23	16.73	5.50	4 x 3/4	31.97
3” ANSI	7.87	12.01	13.23	16.73	6.00	4 x 3/4	31.97

([1]) Flanged connection kit

Dimensions
VMM

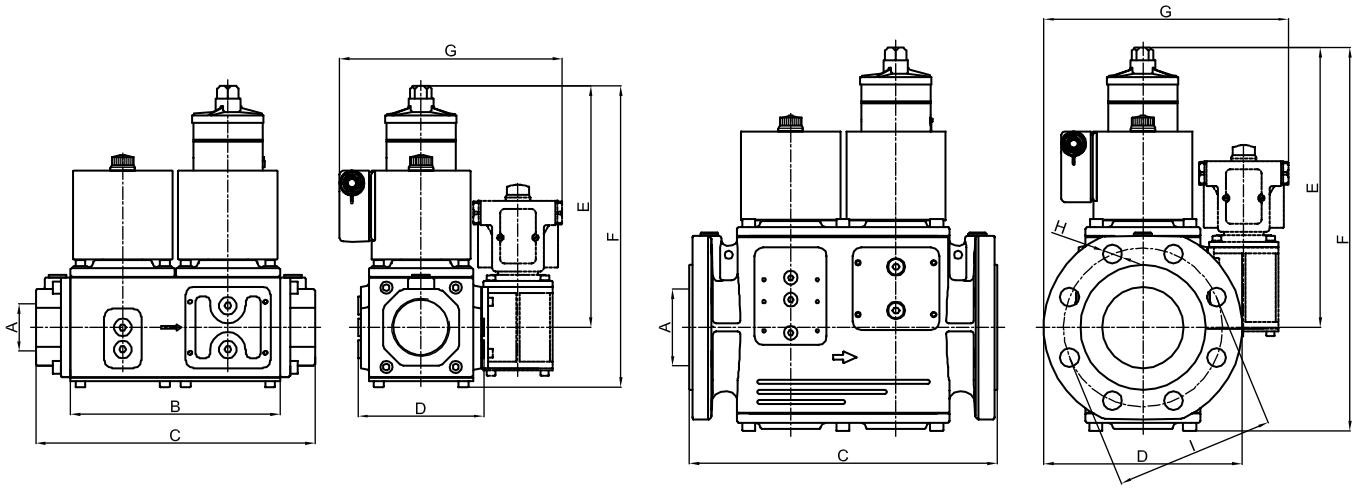

Fig. 7

Tab. 6

Model	Overall dimensions [inches]									Weight [lbs]
	A	B	C	D	E	F	G	H	I	
VMM..F00	3/4”NPT 1” NPT	6.06	7.28	3.07	5.12	6.50	4.41	-	-	11.90
VMM..S00		6.06	7.28	3.07	7.32	8.70	4.41	-	-	12.80
VMM..S10		6.06	7.28	3.07	7.32	8.70	7.64	-	-	15.70
VMM..S20		6.06	7.28	3.07	7.32	8.70	7.64	-	-	16.50
VMM..F00	1-1/4” NPT 1-1/2” NPT 2” NPT 2” ANSI	8.31	11.02	5.00	6.69	9.05	5.82	-	-	28.70
VMM..S00		8.31	11.02	5.00	9.64	12.00	5.82	-	-	30.20
VMM..S10		8.31	11.02	5.00	9.64	12.00	7.87	-	-	33.70
VMM..S20		8.31	11.02	5.00	9.64	12.00	7.87	-	-	34.20
VMM..S30		8.31	11.02	5.00	9.64	12.00	8.66	-	-	35.90
VMM..S40		8.31	11.02	5.00	9.64	12.00	8.66	-	-	36.40
VMM..F00	2-1/2” ANSI 3” ANSI	-	12.20	7.87	8.39	12.48	7.87	4 x 3/4 4 x 3/4	5.50 6.00	37.50
VMM..S00		-	12.20	7.87	11.34	15.28	7.87			40.10
VMM..S10		-	12.20	7.87	11.34	15.28	9.84			43.70
VMM..S20		-	12.20	7.87	11.34	15.28	9.84			44.10
VMM..S30		-	12.20	7.87	11.34	15.28	9.84			45.90
VMM..S40		-	12.20	7.87	11.34	15.28	9.84			46.30

Safety Values
VMR, VML, VMM

For SIL	
Suitable for Safety Integrity Level	SIL 1, 2, 3
Diagnostic coverage DC	0
Type of subsystem	Type A to EN 61508-2, 7.4.4.1.3
Mode of operation	High demand mode pursuant to EN 61508-4, 3.5.16
B_{10d} value	Operating cycles: VMR..OTN (8 ≤ DN ≤ 15): 12,410,907 VMR (10 ≤ DN ≤ 150): 15,504,991 VML (10 ≤ DN ≤ 80): 14,983,655 VMM (20 ≤ DN ≤ 80): 15,151,564
Hardware fault tolerance (1 valve) HFT	0
Hardware fault tolerance (2 valves) HFT	1
Fraction of undetected common cause failures ß	10%

Maximum service life under operating conditions is 10 years after date of production (found on valve label), or once the given number of operating cycels is reached. The valve should be replaced upon realizing the first of these two milestones.

Solenoid valves VMR..OTN, VMR, and VML are suitable for single-channel systems (HFT=0) up to SIL 2, and up to SIL 3 when two redundant valves are installed in double-channel architecture (HFT=1), provided that the complete system complies with the requirements of EN 61508/ISO 13849. Note that VMM is by default suitable for double-channel systems up to SIL 3.

The B_{10d} value is the mean number of cycles until 10% of the components fail dangerously.

VMR/VML-60 models are not included in the above evaluation data.

NOTE: -60 (90 PSI) valves are not recommended for high cycling rates, often seen by burner SSOVs on pulse-fire systems. Excessive cycling of 90 PSI valve models is likely to reduce the life of the valve.

Gas Flow Chart

(Pressure Drop)

VMR, VML

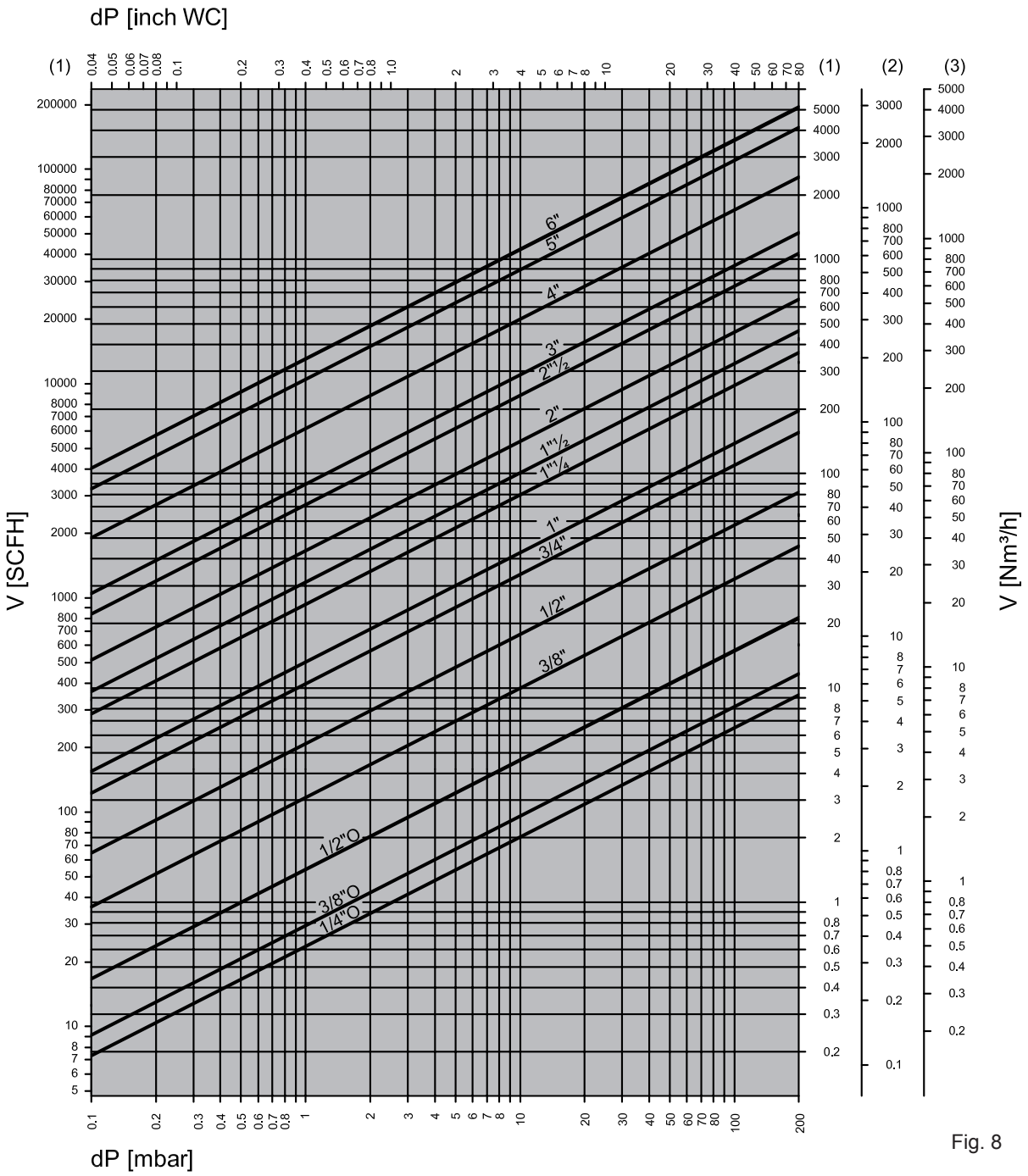

Fig. 8

Tab. 7

Gas type	Density p [lb/ft3]	$k = \sqrt{\frac{0.08}{p_{GAS}}}$
(1) Natural gas	0.05	1.25
(2) LPG	0.13	0.77
(3) Air	0.08	1.00

60°F, 14.7 PSIA, dry

Formula of conversion from air to other gases

$$V_{GAS} = k \cdot V_{AIR}$$

Gas Flow Chart

(Pressure Drop)

VMM

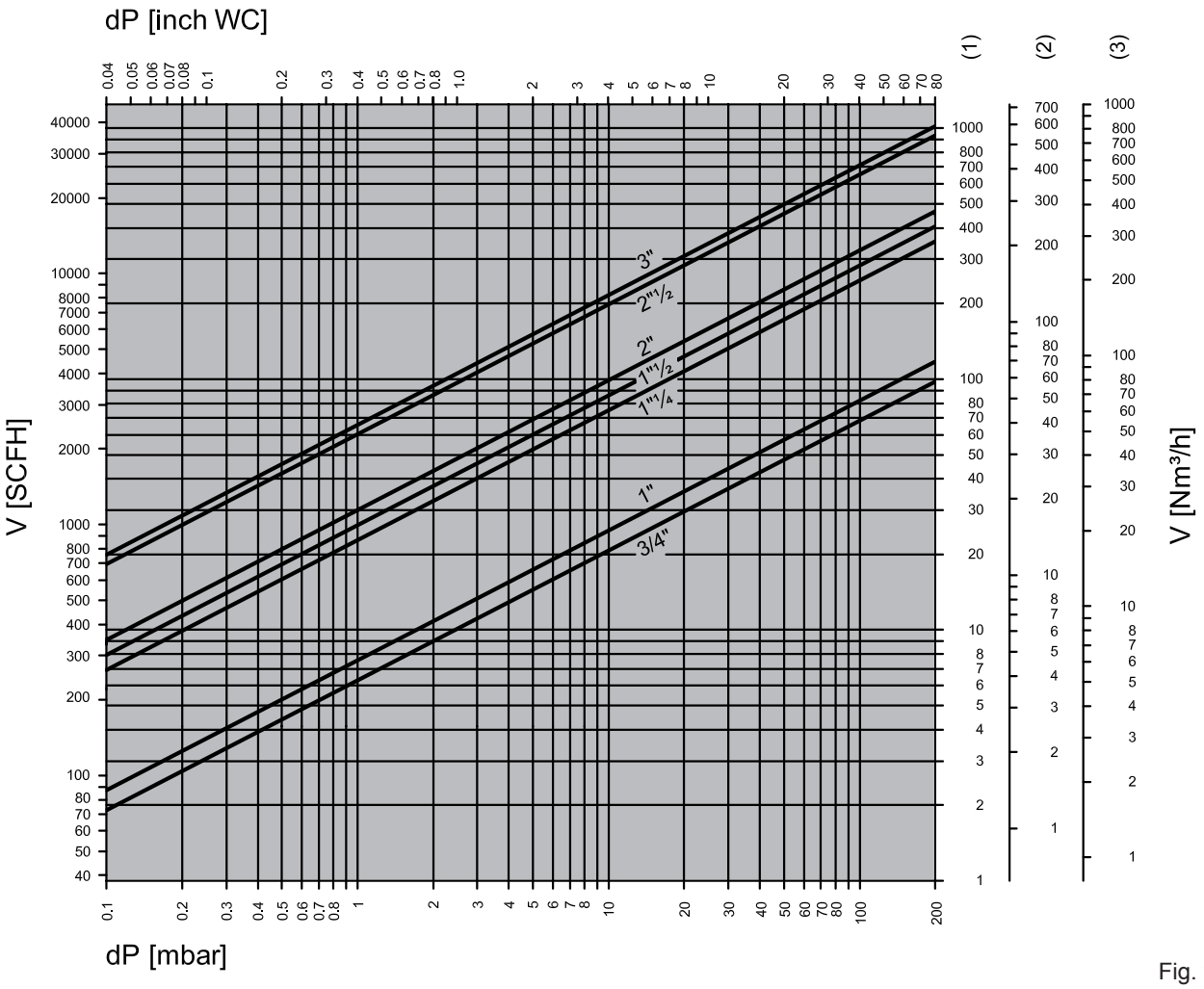

Fig. 9

Tab. 7

Gas type	Density p [lb/ft3]	$k = \sqrt{\frac{0.08}{p_{GAS}}}$
(1) Natural gas	0.05	1.25
(2) LPG	0.13	0.77
(3) Air	0.08	1.00

60°F, 14.7 PSIA, dry

Formula of conversion from air to other gases

$$V_{GAS} = k \cdot V_{AIR}$$

When the flow read on the diagram refers to operating pressure instead of standard conditions, the pressure drop Δp read on the diagram must be multiplied by the factor:
(1+ relative pressure in bar)

Example:

In the 2” solenoid valve with an air flow of 80 Nm^3/h there is a pressure drop Δp = 5 mbar.
If we have a 2” solenoid valve with a flow of 80 m^3/h at 200 mbar (0.2bar) of inlet pressure, then the pressure drop to be considered is:

$\Delta p = 5*(1+0.2) = 6$ mbar

Convert mbar to PSI:

6 mbar * 0.0145 = 0.087 PSI

Normally, pressure drop and flow rate for the valves are read from the gas flow diagram. However, the valves can also be chosen in accordance with the characteristic “Kvs value” which is shown in tables 8 & 9.

The selection of the valve requires the calculation of the Kv under the operating conditions.

Considering only subcritical pressure drops:

$$\Delta p < \frac{p_1}{2}$$

Kv can be calculated with the formula:

$$Kv = \frac{V}{11.9}\sqrt{\frac{p(t+459.4)}{\Delta p \cdot p_2}}$$

where

V	= flow rate [SCFH]
Kv	= flow factor [ft^3/h]
p	= density [lb/ft^3]
p_1	= absolute inlet pressure [PSI]
p_2	= absolute outlet pressure [PSI]
Δp	= differential pressure p_1-p_2 [PSI]
t	= media temperature [°F]

To the Kv value calculated from operating conditions we add an allowance of 20%, to obtain the minimum Kvs value which the valve should have:

Kvs > 1.2 Kv

Please note the following:

Cv = 1.16 Kv

Flow Factor
Kvs
VMR, VML

Tab. 8

	1/4”O NPT	3/8”O NPT	1/2”O NPT	3/8” NPT	1/2” NPT	3/4” NPT	1” NPT	1-1/4” NPT
cu ft/h	19.42	24.72	45.91	102.41	169.51	335.49	423.78	776.92
	1-1/2” NPT	**2” NPT**	**2-1/2” NPT**	**2-1/2” ANSI**	**3” ANSI**	**4” ANSI**	**5” ANSI**	**6” ANSI**
cu ft/h	1024.13	1412.59	2295.45	2295.45	2825.17	5226.57	8828.67	11124.10

Flow Factor
Kvs
VMM

Tab. 9

	cu ft/h		
	Main valve	**Bypass 1/2”**	**Bypass 1”**
3/4” NPT	211.88	162.45	-
1” NPT	247.20	162.45	-
1-1/4” NPT	759.27	211.88	317.83
1-1/2” NPT	882.87	211.88	317.83
2” NPT	967.62	211.88	317.83
2-1/2” ANSI	2083.57	211.88	317.83
3” ANSI	2154.19	211.88	317.83

Valve must be selected considering the following:

- Pressure drops $\Delta p \leq 0.1\ p_1$ are recommended and $\Delta p > p_1/2$ are always unadvisable.
- Flow velocities $w \leq 49$ ft/s are recommended and $w > 164$ ft/s are always unadvisable.

Single Valve
Selection Guide
VMR..OTN

VMR..OTN Model Key

Tab. 10

		VMR	01	-2	N	OTN	.	C	I	
VMR	safety solenoid valve, fast opening									
01	1/4” NPT									
0	3/8” NPT									
1	1/2” NPT									
-2	3 PSI									
N	USA version[1]									
OTN	Brass body version[2]									
.										
NULL	120V AC (std. for N version)									
A	230V AC									
B	110V AC									
C	24V AC/DC									
D	12V DC									
T1	DIN plug + LED (integrated on plug)									
I	DIN plug									
O1	IP65 protection for ISO connection									

[1]USA version (N)

“N” signifies that the valve has been manufactured for use in North America. Standard features of the N version valve include: NPT threads/ANSI flange connections; 120V AC main voltage (unless specified otherwise in the ordering code by means of an optional character).

[2]Brass body version (OTN)

“OTN” is a fast-open SSOV with a brass body. This valve is available only in sizes 1/4”, 3/8”, and 1/2”. The max. pressure for this version is 3 PSI. VI and POC are not available for the OTN. ISO connection plug is standard. Select the desired ISO connection plug option (T1, I).

Possible Configurations

Tab. 11

Model	.	A	B	C	D	T1	I	O1
VMR01-2NOTN	.	o	o	●	o	o	●	o
VMR0-2NOTN	.	o	o	o	o	o	o	o
VMR1-2NOTN	.	o	o	o	o	o	o	o

example: VMR01-2NOTN.CI

Single Valve Selection Guide VMR, VML

Tab. 12

VMR, VML Model Key

these selections omitted if not used

		VM	R	2	-5	N	.	A	P		I	
VM	safety solenoid valve											
R	fast opening											
L	slow opening											
0	3/8” NPT											
1	1/2” NPT											
2	3/4” NPT											
3	1” NPT											
35	1-1/4” NPT											
4	1-1/2” NPT											
6	2” NPT											
6F	2” ANSI (using flange connection kit)											
7T	2-1/2” NPT											
78	2-1/2”—3” ANSI											
9	4” ANSI											
93	5” ANSI											
95	6” ANSI											
-2	3 PSI											
-3	5 PSI											
-5	7.25 PSI											
-60	90 PSI											
N	USA version[1]											
.												
NULL	120V AC (std. for N version)											
A	230V AC											
B	110V AC											
C	24V AC/DC (≥1”, please specify AC or DC)											
D	12V AC/DC											
P	Proof of closure (3/8 - 3” VMR/VML; 4” VMR only)											
P6	POC w/ gold contacts (notes as above)											
J	For aggressive gas (AG)[2]											
K	For aggressive and/or dirty gas (COG, BFG, etc.)[3]											
T1	DIN plug + LED (integrated on electronic board)[4]											
I	DIN plug											
T	LED (integrated on electronic board)[4]											
O	IP65 protection w/ 1000 mm cable[5]											
O1	IP65 protection for ISO connection[5]											

Single Valve
Selection Guide
VMR, VML

[1]USA version (N)

"N" signifies that the valve has been manufactured for use in North America. Standard features of the N version valve include: NPT threads/ANSI flange connections; 120V AC main voltage (unless specified otherwise in the ordering code by means of an optional character); a low power electronic board uses full power for the opening stage before switching to low power consumption mode for the holding stage (not available for 12V, 24V, or for VML 90 PSI models in sizes 3/8"-1"); and G1/8" facility for installation of VI module. 1/4" plugs in valve body outlet chamber are standard equipment for valves sized 1-1/4" — 6" (not available in smaller models).

[2]For aggressive gas (AG) version (J)

"J" signifies that the valve has been manufactured for use with aggressive gas*. This modification is compatible with POC in models 1-1/4" and larger. For smaller valves (3/4" - 1"), version J is not available in conjunction with POC.

[3]For aggressive and/or dirty gas (COG, BFG, etc.) version (K)

"K" signifies that the valve has been manufactured for use with aggressive and/or dirty gases*, such as Coke Oven Gas or Blast Furnace Gas. Note that version K is not available with POC or with 90 PSI models.

[4]LED integrated on electronic board version (T1, T)

"T" is not available for 24V or 12V. "T1" in this case is a DIN plug with LED inside.

[5]IP65 version (O, O1)

"O" signifies the valve has been modified for IP65 protection and is provided with a 1000 mm cable. This option is not compatible with DIN plug connection, so cannot be ordered in conjunction with "I" or "T1."

"O1" signifies the valve has been modified for IP65 protection for DIN plug connection. This option can only be selected if either "I" or "T1" are also present.

Possible Configurations

Tab. 13

Model	-2	-3	-5	-60	N	.	A	B	C	D	P	P6	J	K	T1	I	T	O	O1
VMR0	o	-	o	o	N	.	o	o	o†	-2	o*	o*	o§	o^	o	o	o	o‡	o‡
VMR1	o	-	o	o	N	.	o	o	o†	-2	o*	o*	o§	o^	o	o	o	o‡	o‡
VMR2	o	-	●	o	●	.	●	o	o†	-2	●	o	o§	o^	o	●	o	o‡	o‡
VMR3	o	-	o	o	N	.	o	o	o†	-2	o	o	o§	o^	o	o	o	o‡	o‡
VMR35	o	-	o	o	N	.	o	o	o†	-2	o	o	o	o^	o	o	o	o‡	o‡
VMR4	o	-	o	o	N	.	o	o	o†	-2	o	o	o	o^	o	o	o	o‡	o‡
VMR6	o	-	o	o	N	.	o	o	o†	-2	o	o	o	o^	o	o	o	o‡	o‡
VMR6F	o	-	o	o	N	.	o	o	o†	-2	o	o	o	o^	o	o	o	o‡	o‡
VMR7T	o	o	-	o	N	.	o	o	-2	-	o	o	o	o^	o	o	o	o‡	o‡
VMR78	o	o	-	o	N	.	o	o	-2	-	o	o	o	o^	o	o	o	o‡	o‡
VMR9	o	o	-	o	N	.	o	o	-2	-	o	o	o	o^	o	o	o	o‡	o‡
VMR93	o	o	-	-	N	.	o	o	-	-	-	-	o	-	o	o	o	o‡	o‡
VMR95	o	o	-	-	N	.	o	o	-	-	-	-	o	-	o	o	o	o‡	o‡

(-2) Voltage selection only available with 3 PSI version. Not available with T option.
(*) VMR0-60 and VMR1-60 are not available with proof of closure.
(†) Not available in 7.25 PSI version.
(^) K versions cannot be ordered with P(6). K versions cannot be ordered in 90 PSI version.
(§) J version cannot be ordered with P(6) in 3/8, 1/2, 3/4 or 1" size.
(‡) O versions cannot be ordered with I or T1; O1 versions can only be ordered if I or T1 is present.

example: VMR2-5N.API

*Compatibility of gas contents and valve materials to be checked by our Technical Department.

Single Valve Selection Guide VMR, VML

VMR

VML

Possible Configurations

Tab. 14

Model	-2	-3	-5	-60	N	.	A	B	C	D	P	P6	J	K	T1	I	T	O	O1
VML0	o	-	o	o	N	.	o	o	-2	-	o*	o*	o§	o^	o	o	o	o‡	o‡
VML1	o	-	o	o	N	.	o	o	-2	-	o*	o*	o§	o^	o	o	o	o‡	o‡
VML2	o	-	●	o	●	.	●	o	-2	-	●	o	o§	o^	o	●	o	o‡	o‡
VML3	o	-	o	o	N	.	o	o	-2	-	o	o	o§	o^	o	o	o	o‡	o‡
VML35	o	-	o	o	N	.	o	o	-2	-	o	o	o	o^	o	o	o	o‡	o‡
VML4	o	-	o	o	N	.	o	o	-2	-	o	o	o	o^	o	o	o	o‡	o‡
VML6	o	-	o	o	N	.	o	o	-2	-	o	o	o	o^	o	o	o	o‡	o‡
VML6F	o	-	o	o	N	.	o	o	-2	-	o	o	o	o^	o	o	o	o‡	o‡
VML7T	o	o	-	o	N	.	o	o	-	-	o	o	o	o^	o	o	o	o‡	o‡
VML78	o	o	-	o	N	.	o	o	-	-	o	o	o	o^	o	o	o	o‡	o‡

(-2) Voltage selection only available with 3 PSI version. Not available with T option.
(*) VML0-60 and VML1-60 are not available with proof of closure.
(^) K versions cannot be ordered with P(6). K versions cannot be ordered with -60.
(§) J version cannot be ordered with P(6) in 3/8, 1/2, 3/4 or 1” size.
(‡) O versions cannot be ordered with I or T1; O1 versions can only be ordered if I or T1 is present.

example: VML2-5N.API

NOTE: -60 (90 PSI) valves are not recommended for high cycling rates, often seen by burner SSOVs on pulse-fire systems. Excessive cycling of 90 PSI valve models is likely to reduce the life of the valve.

Double Valve Selection Guide VMM

Tab. 15

VMM Model Key

these selections omitted if not used

		VMM	20	-2	N	C	F	1	0	.	P		I		
VMM	safety solenoid double valve														
20	3/4” NPT														
25	1” NPT														
32	1-1/4” NPT														
40	1-1/2” NPT														
50	2” NPT														
50F	2” ANSI														
78	2-1/2”—3” ANSI														
-2	3 PSI														
-5	7.25 PSI														
N	USA version[1]														
NULL	120V AC (std. for N version)														
A	230V AC														
B	110V AC														
C	24V AC/DC (AC not available for 2-1/2, 3”)														
F	2nd valve fast opening														
S	2nd valve slow opening														
0	Bypass mounted on right: none														
1	Bypass mounted on right: 1/2” fast open														
2	Bypass mounted on right: 1/2” slow open														
3	Bypass mounted on right: 1” fast open														
4	Bypass mounted on right: 1” slow open														
0	Bypass mounted on left[2]: none														
1	Bypass mounted on left[2]: 1/2” fast open														
2	Bypass mounted on left[2]: 1/2” slow open														
3	Bypass mounted on left[2]: 1” fast open														
4	Bypass mounted on left[2]: 1” slow open														
.															
P	Proof of closure[3]														
P6	POC w/ gold contacts (notes as above)														
J	For aggressive gas (AG)[4]														
T1	DIN plug + LED (on electronic board)[5]														
I	DIN plug														
T	LED (integrated on electronic board)[5]														
D	Bypass valve is a pilot valve[6]														
O	IP65 protection w/ 1000 mm cable[7]														
O1	IP65 protection for ISO connection[7]														

Double valve
Selection Guide
VMM

[1]USA version (N)

"N" signifies that the valve has been manufactured for use in North America. Standard features of the N version valve include: NPT threads/ANSI flange connections; 120V AC main voltage (unless specified otherwise in the ordering code by means of an optional character); a low power electronic board uses full power for the opening stage before switching to low power consumption mode for the holding stage (not available for 24V); and G1/8" facility for installation of VI module.

[2]Bypass mounted on left

Please note that mounting a bypass valve on the left side of the VMM is a special configuration and therefore has additional cost.

[3]Proof of closure

When a VMM is ordered with proof of closure, one POC device is fitted to V2 (downstream valve). V1 (upstream valve) may be fitted with a VI module if needed. If bypass is ordered, the POC device is fitted to V1 instead.

[4]For aggressive gas (AG) version (J)

"J" signifies that the valve has been manufactured for use with aggressive gas*. This modification is compatible with POC in models 1-1/4" and larger. For smaller valves (3/4" - 1"), version J is not available in conjunction with POC.

[5]LED integrated on electronic board version (T1, T)

"T" is not available for 24V, 12V, or versions with plastic coils. "T1" in this case is a DIN plug with LED inside.

[6]Bypass valve is a pilot valve (D)

With this selection, the side valve is used as a pilot valve rather than a bypass. The outlet of this valve does not re-enter the valve body, but instead has an independent output connection for fueling a pilot burner.

[7]IP65 version (O, O1)

"O" signifies the valve has been modified for IP65 protection and is provided with a 1000 mm cable. This option is not compatible with DIN plug connection, so cannot be ordered in conjunction with "I" or "T1."

"O1" signifies the valve has been modified for IP65 protection for DIN plug connection. This option can only be selected if either "I" or "T1" are also present.

Possible Configurations

Tab. 16

Model	-2	-5	N	A	B	C	F	S	0	1	2	3	4	0	1	2	3	4	.	P	P6	J	T1	I	T	D	O	O1
VMM20	●	o	●	o	o	●	●	o	o	●	o	-	-	●	o	o	-	-	.	●	o	o§	o	●	o	o	o‡	o‡
VMM25	o	o	N	o	o	-2	o	o	o	o	o	-	-	o	o	o	-	-	.	o	o	o§	o	o	o	o	o‡	o‡
VMM32	o	o	N	o	o	-2	o	o	o	o	o	o	o	o	o	o	o	o	.	o	o	o	o	o	o	o	o‡	o‡
VMM40	o	o	N	o	o	-2	o	o	o	o	o	o	o	o	o	o	o	o	.	o	o	o	o	o	o	o	o‡	o‡
VMM50	o	o	N	o	o	-2	o	o	o	o	o	o	o	o	o	o	o	o	.	o	o	o	o	o	o	o	o‡	o‡
VMM50F	o	o	N	o	o	-2	o	o	o	o	o	o	o	o	o	o	o	o	.	o	o	o	o	o	o	o	o‡	o‡
VMM78	o	o	N	o	o	-2*	o	o	o	o	o	o	o	o	o	o	o	o	.	o	o	-	o	o	o	o	o‡	o‡

(-2) Voltage selection only available with 3 PSI version. Not available with T option.
(*) 2-1/2 and 3" available in 24V DC only (AC not available).
(§) J version cannot be ordered with P(6) in 3/4" or 1" size.
(‡) O versions cannot be ordered with I or T1; O1 versions can only be ordered if I or T1 is present.

example: VMM20-2NCF10.PI

*Compatibility of gas contents and valve materials to be checked by our Technical Department.

Special Versions

- VMR (excluding OTN) and VML can be supplied in special versions for agressive gases such as biogas (version J from 3/8” to 6”) and COG (version K from 3/8” to 4”). These versions are free of non-ferrous metals and are provided with special seals. The seals for version J valves are made of FPM rubber instead of NBR, and some components which would be brass in a standard valve are made of stainless steel instead. Version K valves incorporate these changes but also include additional components to prevent sticking.
- VMR (exluding OTN), VML, and VMM are available with a proof of closure switch (POC) for compliance with NFPA 86 requirements (version P(6) from 3/4” to 4”). A factory-adjusted SPDT switch inside an enclosure mounted on the bottom of the valve provides an electrical signal indicating the valve position. A two-colored LED provides visual indication of the valve position (Red = valve open; Green = valve closed).

Proof of closure switch contact rating:

Version	Voltage	Min. current (resistive load)	Max. current (resistive load)
P	250 VAC 125 VAC	100 mA 100 mA	2 A 3 A
	30 VDC	100 mA	3 A
P6	125 VAC	2 mA	0.1 A
	30 VDC	2 mA	0.1 A

Proof of closure switching max. 5 x per minute

Note: The POC device is provided with an ISO plug which contains one (1) two-tone LED. The LED serves as the visual indication, and functions when voltage between 24 and 125V is used. For higher voltages an external resistor must be added. Lower voltages would require a different plug (not currently available).

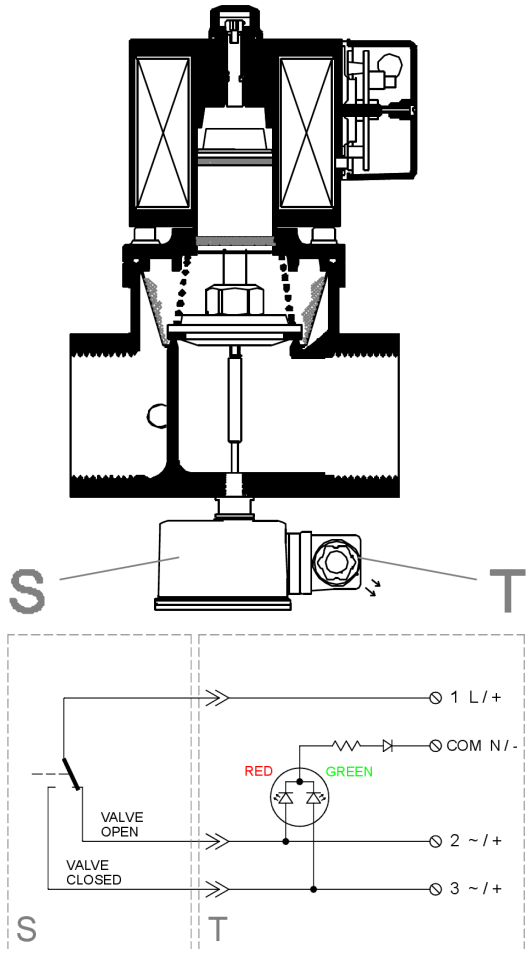

Options

- The enclosure can be upgraded to IP65 (O, O1). This upgrade includes a sealed terminal box and cable set (cable details: FROR 450/750V 3G1, L=1.5m).
- Most models can be provided with a transparent cover and LED light which indicates when electrical power is supplied (T). Not included are models for 24V or 12V.
- Threaded VMR, VML, & VMM valves size 2” can be provided with flanged connections using an optional kit.

Accessories

Tab. 17

Model	Function
VI1	Visual Indicator, for use with VMR/VML valves, size 3/8” - 1/2”
VI3	Visual Indicator, for use with VMR/VML valves, size 3/4” - 1”
VI4	Visual Indicator, for use with VMR/VML valves, size 1-1/4” - 1-1/2”
VI6	Visual Indicator, for use with VMR/VML valves, size 2”
VI7T	Visual Indicator, for use with VMR/VML valves, size 2-1/2” NPT
VI8	Visual Indicator, for use with VMR/VML valves, size 2-1/2” - 3”
VI9	Visual Indicator, for use with VMR/VML valves, size 4”
VI95	Visual Indicator, for use with VMR/VML valves, size 5” - 6”
VI1-60	Visual Indicator, for use with VMR/VML-60 valves, size 3/8” - 1/2”
VI3-60	Visual Indicator, for use with VMR/VML-60 valves, size 3/4” - 1”
VI4-60	Visual Indicator, for use with VMR/VML-60 valves, size 1-1/4” - 1-1/2”
VI6-60	Visual Indicator, for use with VMR/VML-60 valves, size 2”
VI7T-60	Visual Indicator, for use with VMR/VML-60 valves, size 2-1/2” NPT
VI8-60	Visual Indicator, for use with VMR/VML-60 valves, size 2-1/2” - 3”
VI9-60	Visual Indicator, for use with VMR/VML-60 valves, size 4”
VI3M	Visual Indicator, for use with VMM valves, size 3/4” - 1”
VI4M	Visual Indicator, for use with VMM valves, size 1-1/4” - 2”
VI8M	Visual Indicator, for use with VMM valves, size 2-1/2 - 3”
TPN025	Test Port with internal screw plug, 1/4” NPT
ISO-DIN	Spare ISO plug for power (110/120/230V AC)
POC-DIN	Spare 2-LED ISO plug for proof of closure device. Using a 2-LED plug ensures the device fulfills visual indication requirements in addition to proof of closure functionality.
PG9-1/2NPT	Elektrogas ISO Plug (power) Conduit Adapter, PG9 (M) x 1/2 NPT (F), Nickel Plated Brass
PG11-1/2NPT-B	Elektrogas POC Plug Conduit Adapter, PG11 (M) x 1/2 NPT (F), Nickel Plated Brass
PG11-1/2NPT-N	Elektrogas POC Plug Conduit Adapter, PG11 (M) x 1/2 NPT (F), Nylon

Note: Throughout this document, we use the terms “DIN plug” and “ISO plug” interchangeably to refer to a plug-and-socket electrical connection in accordance with the following norms:
DIN 43650A
ISO 4400
EN 175301- 803 A

VI

Design, installation, and servicing

To assure a proper and safe operation, as well as a long service life of the valve, consider the following recommendations during the design of the system where the valve will be installed:

- Ensure that all the features of your system comply with the specifications of the valve (gas type, operating pressure, flow rate, ambient temperature, electrical voltage, etc.).
- Valve may be mounted with coil in horizontal or vertical position, not upside down. Coil may be oriented 360 degrees in any direction.
- In the event of vertical pipe, the flow direction should be from bottom to top.
- After removing the end caps make sure no foreign body will enter into the valve during handling or installation (e.g. swarf or excessive sealing agent).
- A gas filter should always be installed upstream of the valve.
- Ensure that the installation area is protected from rain and water splashes or drops.
- Perform leak and functional tests after mounting.
- The continuous service (100% ED) causes inevitable coil heating, depending on working environment. Never install the valve close to walls or other equipment. To improve the coil cooling, install the valve allowing free air circulation.
- Perform maintenance according to service instructions at least once a year (more often for aggressive gases).
- Valve seals age. To ensure safe operation, we recommend the valve is replaced 10 years from the date of manufacture (stamped on the product label). Heavy cycle operation may reduce the expected lifetime.
- This control must be installed in compliance with the rules in force.
- Make sure all work is performed by qualified technicians only and in compliance with local and national codes.
- To prevent product damage and dangerous situations, carefully read the instructions supplied with the product before use.

For more details see the Installation and Service Instructions.

Standards and approvals

The product complies with the essential requirements of the following European Directives and their amendments:

2009/142/EC (Gas Appliances Directive)
2014/68/EU (Pressure Equipment Directive)
2014/34/EU (ATEX) when shown upon the product
2014/30/EU (Electromagnetic Compatibility)
2014/35/EU (Low Voltage Directive)
2011/65/EU (RoHS II)

CE-Reg.-No. 0063AQ1350
CE-Reg.-No. PED/0497/3136/16

The product has been approved by Factory Mutual [NFPA 86 (Class 7400)].

Certificate No.: 0003061781

The product complies with the Technical Regulation TP TC 004/2011-016/2011-020/2011-032/2013 of Russia, Belarus and Kazakhstan.

Certificate No.: TC № RU Д-IT.PA01.B.21942

The valves meet the requirements of functional safety of electrical systems according to the European standard IEC EN 61508 and are certified for systems up to SIL3.

Certificate No.: C-IS-248034-01

Quality Management System is certified according to UNI EN ISO 9001.

Elektrogas is represented in the USA, Canada, and Mexico by Olsträd Engineering Corporation.

Olsträd Engineering Corporation
600 Mogadore Road
Kent, OH 44240

ph: 330.678.4328
combustion911.com
support_ab@combustion911.com
olstrad.com
order_processing@olstrad.com

The information in this document contains general descriptions of technical options available and based on current specifications.

The company reserves the right to make changes in specifications and models as design improvements are introduced, without prior notice.

Elektrogas is a brand name of:

Elettromeccanica Delta S.p.A.
Via Trieste 132
31030 Arcade (TV) – ITALY

tel +39 0422 874068
fax +39 0422 874048
www.delta-elektrogas.com
info@delta-elektrogas.com

Copyright © 2024
All rights reserved