Christian Maier GmbH & Co. KG
Würzburger Str. 67-69
D-89520 Heidenheim

Tel.: +49 7321 317-0
Website: www.maier-heidenheim.com
E-Mail: info@maier-heidenheim.de

Operating Instructions for Maier Rotary Joints

Design DS 150L111
Article number 1124001762



Contents

1 General **5**
1.1 Information on this manual . . . 5
1.2 Explanations and symbols . . . 5

2 Product description **6**
2.1 Intended use . . . 6
2.2 Reasonably foreseeable misuse . . . 6
2.3 Components . . . 7

3 Function **9**
3.1 One-Way Flow Design (single passage) . . . 9
3.2 Rotor Connection . . . 10

4 Safety **12**
4.1 Introduction . . . 12
4.2 General safety information . . . 12
4.3 Structure of the safety instructions . . . 13
4.3.1 Signal words . . . 13
4.3.2 Pictograms used . . . 15
4.4 Qualified staff . . . 16
4.5 Risk assessment and residual hazards . . . 16

5 Transportation and Storage **17**

6 Information on design and mounting and operation **18**

7 Mounting **20**
7.1 Mounting with threaded rotor . . . 20
7.2 Connecting the rotary joint . . . 21
7.2.1 Anti-Rotation Device . . . 21
7.2.2 Rotary joint hosing . . . 22
7.3 Tightening torques for fastening screws . . . 25

8 Operation **27**
8.1 Commissioning . . . 27
8.2 During operation . . . 27
8.3 Troubleshooting . . . 28

9 Maintenance **29**
9.1 Maintenance plan . . . 29

© 2024 by Christian Maier & Co. KG. This document may not be copied or disclosed to third parties.
All rights, including copyright and property rights, reserved by Christian Maier GmbH & Co. KG

10 Repair **30**
10.1 Tools . . . 30
10.2 Dismounting the rotary joint from the roller . . . 30
10.3 Dismantling the Rotary Joint . . . 31
10.4 Assembly of the rotary joint . . . 33

11 Warranty **35**
11.1 Starting, duration and verification of the warranty . . . 35
11.2 Prerequisites for a guarantee commitment . . . 35
11.3 Content and scope of warranty . . . 35
11.4 Statute of limitation . . . 36

12 Disposal **37**
12.1 Dispose of packaging . . . 37
12.2 Dispose of rotary joint . . . 37

13 Specification and Spare Parts **38**
13.1 Application data . . . 38
13.2 Media Specification . . . 38
13.3 Information on design and mounting and operation . . . 39
13.4 Initial Lubrication and Relubrication . . . 40
13.5 Parts List . . . 43

© 2024 by Christian Maier & Co. KG. This document may not be copied or disclosed to third parties.
All rights, including copyright and property rights, reserved by Christian Maier GmbH & Co. KG

Preface

Keep this manual for future reference.

Editor

Christian Maier GmbH & Co. KG
Würzburger Str. 67-69
D-89520 Heidenheim
Tel: +49 7321/317-0
Fax: +49 7321/317-139
E-Mail: vkd@maier-heidenheim.de
Website: www.maier-heidenheim.com

Copyright

© Christian Maier GmbH & Co. KG Maschinenfabrik

This manual including all parts of this manual is protected by international copyright laws. Any use or modification of this manual beyond the limits of the copyright laws is prohibited and a legal offense without the consent of Christian Maier GmbH & Co. KG Maschinenfabrik.

This applies, but is not limited to reproduction, translation, microfilming and storing and processing in electronic systems.

Document identification

Title	Operating Instructions for Maier Rotary Joints
Document designation	B-DS_150L111_en
Document type	
Date of issue	21.02.24
Version	1

List of modifications

© 2024 by Christian Maier & Co. KG. This document may not be copied or disclosed to third parties.
All rights, including copyright and property rights, reserved by Christian Maier GmbH & Co. KG

1 General

1.1 Information on this manual

This manual is intended for use by the operators, the maintenance and the inspection staff. It is divided into the following sections:

- Section 1 "General Part of the Operating Instructions": This section provides general information on the manual, on safety and on handling the product.
- Section 2 "Specifications and Spare Parts": This section provides product-specific data.
- Section 3 "Additional Information for Use in Hazardous Areas (EX areas)": (only available for products certified as per directive 2014/34/EU)

Staff and operators must have read and fully understood the operating instructions and must observe all instructions it contains. Please note that we will not be liable in any way for any damages and operational disruptions resulting from the failure to read and/or observe the operating instructions.

Read chapter 4 and the specific safety instructions in the individual chapters with particular care.

We reserve the right to technical modifications if such modifications are required to improve the rotary joint or its accessories, i.e. details and descriptions may differ from the information given in this manual.

1.2 Explanations and symbols

Symbol	Used for	Explanation
•	List	List of facts and instructions. No specific sequence required.
1.	Instructions consisting of several individual steps	Instructions consisting of several steps which must be followed exactly in the sequence listed. Failure to observe the instructions in the correct sequence may result in damages or accidents.
[1]	Item number	Item number of the component mentioned in the corresponding illustration.

© 2024 by Christian Maier & Co. KG. This document may not be copied or disclosed to third parties.
All rights, including copyright and property rights, reserved by Christian Maier GmbH & Co. KG

2 Product description

2.1 Intended use

Maier Rotary Joints are only permitted to be used as fittings to connect pressurized pipes to rotating pressurized systems. Typical examples of such rotating pressurized systems are rollers which are heated or cooled by means of liquid, gas, or steam flowing through them. Please refer to the section 13 for details on approved media, their grades and specifications. These specifications must be observed in the application. Other media may be possible; please consult the manufacturer.

Never modify the rotary joint as this can cause hazards. Install, operate and maintain the rotary joint only as described in these operating instructions. Company Maier will not be liable for any damages and operational disruptions resulting from failure to read and/or observe the operating instructions.

These operating instructions do not contain all the information which is crucial for safe operation. In addition, you are required to observe all national and local laws and regulations concerning the prevention of accidents, applicable at the place of installation.

For repairs, use only genuine Maier spare parts or standardized components explicitly approved by Maier. Using any other components can have adverse effects on the safety of the unit.

2.2 Reasonably foreseeable misuse

In case of reasonably foreseeable misuse of the product, the manufacturer's warranty will be void and the operator will be fully responsible for the consequences.

Reasonably foreseeable misuse includes:

- failure to observe the application data
- failure to observe the medium specifications
- failure to observe the maintenance intervals
- failure to replace wearing parts
- failure to perform maintenance work
- faulty maintenance work
- additional components mounted and conversions carried out without written approval
- use of non-genuine spare parts

© 2024 by Christian Maier & Co. KG. This document may not be copied or disclosed to third parties.
All rights, including copyright and property rights, reserved by Christian Maier GmbH & Co. KG

2.3 Components

The following illustration is a schematic representation. The respective design may differ slightly.

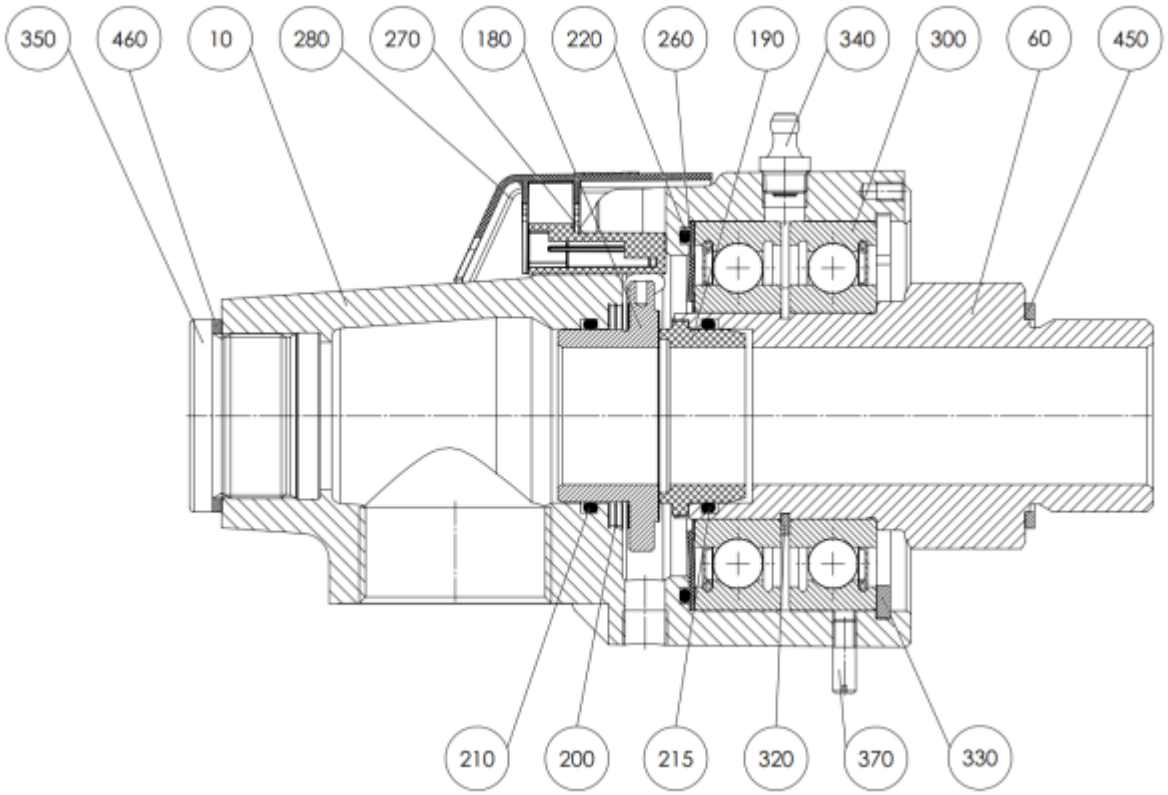

Figure 1

© 2024 by Christian Maier & Co. KG. This document may not be copied or disclosed to third parties.
All rights, including copyright and property rights, reserved by Christian Maier GmbH & Co. KG

10	HOUSING	280	COVER
60	ROTOR	300	DEEP GROOVE BALL BEARING
180	SEALING RING	320	RETAINING RING
190	COUNTER RING	330	RETAINING RING
200	COMPRESSION SPRING	340	GREASE NIPPLE
210	O-RING	350	SCREW PLUG
215	O-RING	370	SHAFT SCREW
220	O-RING	450	SEALING RING
260	BEARING PROTECTION SEAL	460	SEALING RING
270	SENSOR HOUSING SENSE W		

© 2024 by Christian Maier & Co. KG. This document may not be copied or disclosed to third parties.
All rights, including copyright and property rights, reserved by Christian Maier GmbH & Co. KG

3 Function

Information



Please refer to our catalog and the corresponding outline drawing in the section "Specifications and Spare Parts" for further information.

Maier rotary joints are devices which allow you to connect stationary pressurized pipes to rotating pressurized systems. Typical examples of such rotating pressurized systems are rollers through the inside of which flow liquids, gases or steam, for example in order to heat or cool down the rollers. The connection to the stationary pressure system (housing connection) is obtained via the stationary part of the rotary joint – the housing. One-, two, and multi-way-flow rotary joints can be distinguished.

3.1 One-Way Flow Design (single passage)

In the case of one-way versions, the housing has only one connection, which is used to feed the medium to one side of the roller. On the other side of the roller there is another rotary joint which discharges the medium in a controlled manner.

© 2024 by Christian Maier & Co. KG. This document may not be copied or disclosed to third parties.
All rights, including copyright and property rights, reserved by Christian Maier GmbH & Co. KG

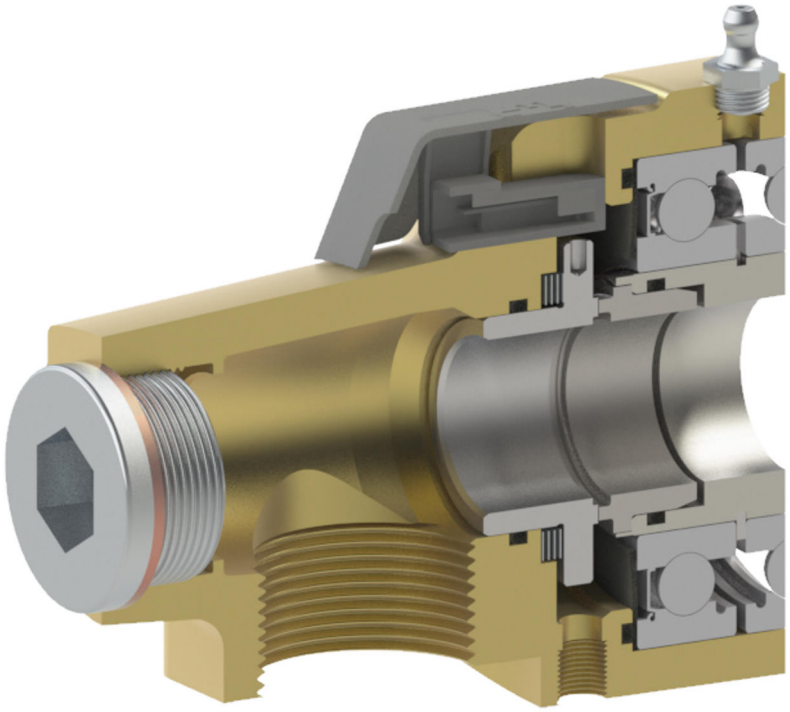

Figure 2

One-Way Flow Design (single passage)
Housing with one connection for supplying or discharging a medium to or from the rotating pressure system.

3.2 Rotor Connection

The connection with the rotating pressure system (rotor connection) is made by the rotating part of the rotary joint - the rotor. A distinction is made here between K-flange, fixed flange, screwed flange or threaded design.

© 2024 by Christian Maier & Co. KG. This document may not be copied or disclosed to third parties.
All rights, including copyright and property rights, reserved by Christian Maier GmbH & Co. KG

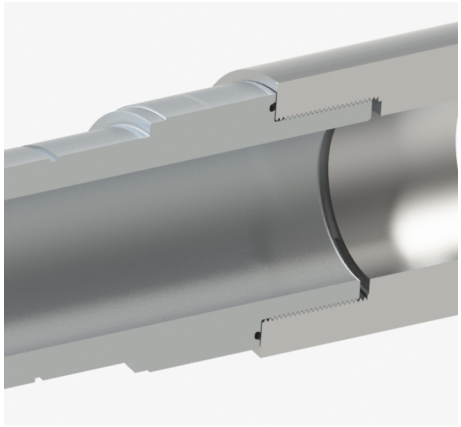

Figure 3: Threaded Connection

The rotor (L) has either a right-hand or a left-hand thread on one end.
An O-Ring or a copper seal is used for sealing.
Rotary joint screwed into roller.

Warning



The direction of roll rotation and thread direction must be selected in such a way that independent loosening is impossible! Rotors with the same thread direction as the direction of roll rotation must be secured against loosening! Rotors with left-hand threads are marked with grooves on the wrench flat.

Information



Please refer to our catalog and the corresponding outline drawing in the section "Specifications and Spare Parts" for further information.

© 2024 by Christian Maier & Co. KG. This document may not be copied or disclosed to third parties.
All rights, including copyright and property rights, reserved by Christian Maier GmbH & Co. KG

4 Safety

4.1 Introduction

The rotary joint was designed and built according to the latest technology and complies with the pertinent safety regulations. However, the rotary joint may still cause dangers if it is not used as intended and according to the instructions or if it is used by untrained staff or if it is tampered with in any way.

Never tamper with the rotary joint or modify it in any way as this may adversely affect the safety and the performance of the rotary joint. We shall not be liable for any damages resulting from unauthorized modification of the rotary joint.

We strongly advise the owner/operator of the rotary joint to check his safety concept in terms of the effects a failure of the rotary joint may have on the environment. Make sure to take all additional safety measures required to protect persons and the environment.

4.2 General safety information

- Always keep the operating instructions at the installation site for quick and easy access.
- In addition to the instructions provided in this manual, you must also observe all the pertinent regulations and guidelines concerning workplace safety and prevention of accidents.
- Equip the rotary joint with a sufficient anti-rotation device.
- Use only flexible elements for housing connections. Do not apply forces to the housing via the connections.
- Only perform work on the rotary joint when the machine/system is at a standstill, cooled down and the pressure released.
- Only operate the rotary joint if it is in perfect technical condition. Only use the rotary joint according to the instructions and specifications; never operate the unit outside of the framework of the specifications and performance data indicated. Be aware of all pertinent safety and danger aspects when operating the rotary joint. Immediately repair any malfunctions or problems or have such malfunctions or problems repaired as they may interfere with the safety of the rotary joint!
- The service life of counter-rotating parts is limited. Therefore, perform preventive maintenance of seals and bearings after no more than 12 months!
- If you need to dismantle safety devices for repair or maintenance of the rotary joint, you must refit such devices immediately upon completion of the work and check the proper function of the devices!
- When replacing the rotary joint, carefully fasten it to appropriate lifting gear and secure it in such a way that it cannot cause danger. Use only suitable lifting gear which is in perfect technical condition and which has a sufficient rating for the load to be lifted! Never step or work below suspended loads!

**© 2024 by Christian Maier & Co. KG. This document may not be copied or disclosed to third parties.
All rights, including copyright and property rights, reserved by Christian Maier GmbH & Co. KG**

- Retighten all screw connections that you may have loosened for maintenance or repair work! Refer to the section 7.3 for information on the tightening torques.
- Use only genuine spare parts for repairs.

Information



For additional information refer to the section "Specifications and Spare Parts".

4.3 Structure of the safety instructions

4.3.1 Signal words

Danger



Acute danger. Failure to avoid the situation will result in death or severe injuries.

Warning



Imminent danger! Failure to avoid the situation can result in death or severe injuries.

© 2024 by Christian Maier & Co. KG. This document may not be copied or disclosed to third parties.
All rights, including copyright and property rights, reserved by Christian Maier GmbH & Co. KG

Caution



Possibly imminent danger! Failure to avoid the situation can result in injuries.

Note



Possibly dangerous situation! Failure to avoid the situation can result in damage to property.

Information



Provides additional information.

© 2024 by Christian Maier & Co. KG. This document may not be copied or disclosed to third parties.
All rights, including copyright and property rights, reserved by Christian Maier GmbH & Co. KG

4.3.2 Pictograms used

Warning: general hazards



This warning pictogram highlights activities that involve several hazards.

Warning: hot surfaces



This warning pictogram highlights activities that involve hazards caused by hot surfaces.

Warning: crushing hazards



This warning pictogram highlights activities that involve hazards caused by rotating machine parts.

Warning: equipment damages



This warning pictogram highlights activities that may cause damage to the rotary joints due to incorrect operation.

© 2024 by Christian Maier & Co. KG. This document may not be copied or disclosed to third parties.
All rights, including copyright and property rights, reserved by Christian Maier GmbH & Co. KG

4.4 Qualified staff

Only staff that has read and fully understood these operating instructions and that is fully aware of the dangers resulting from the unit as well as the appropriate safety precautions may work with Maier rotary joints. Such staff must have at least the knowledge of a trained locksmith or industrial mechanic who has experience with pressurized components. Each person having to do with the installation, mounting, dismantling, commissioning, maintenance and repair of the rotary joint or any other activities concerning the rotary joint must have read and fully understood the operating instructions (and, in particular, all the safety information) before taking up such activities. It is recommended that the owner of the rotary joint have each person confirm this in writing.

4.5 Risk assessment and residual hazards

Rotary joints are machine components that can be used in a large variety of machines and systems. These products are not subject to the Machinery Directive 2006/42/EC – hazards caused by this product are treated by compliance with the pertinent directive 2014/68/EC (Pressure Equipment Directive). Directive 2014/34/EC (Explosion Protection Directive) additionally applies to "ATEX" certified rotary joints.

After installation of our rotary joints into systems/machines, these are subject to the Machinery Directive and may be subject to additional directives and legislation. The user of our products is responsible for complying with all pertinent directives and legislation as well as for performing a risk assessment in accordance with these directives. Depending on the actual installation situation and the actual use of our product, risks may arise that should be avoided by design measures, if possible.

An analysis carried out by Christian Maier GmbH & Co. KG Maschinenfabrik resulted in the aspects listed below which necessitate an additional risk assessment by the user after installation of our products in the system/machine:

- If hot parts are touched or if hot or hazardous media escape under high pressure or if rotating parts draw in persons, this may result in severe burns, scalds, cuts or crushing.
  - Possible measures: Mount a protective cover around the rotary joint which prevents direct contact with hot parts, safely retains escaping medium and prevents contact with rotating parts.
  - If a cover cannot be mounted, other suitable protective measures must be taken. Always use the housing connections provided for the safe discharge of leaking medium.
- If the rotary joint blocks and rotates along with the roller, hoses can be torn off and hot or hazardous mediums may escape under high pressure.
  - Always observe the information for the design department on mounting and operation in chapter 6 .
  - In particular when combining large nominal diameters with high speeds and high temperatures, it is recommended to monitor the rotary joint by means of a torque monitoring system – alternatively by means of a vibration sensor.
  - Ensure that the unit is regularly maintained as per chapter 9 .

The user of our products must verify the applicability and effectiveness of the possible measures listed in the actual situation.

© 2024 by Christian Maier & Co. KG. This document may not be copied or disclosed to third parties.
All rights, including copyright and property rights, reserved by Christian Maier GmbH & Co. KG

5 Transportation and Storage

Transportation

- Use suitable lifting gear to transport rotary joints weighing more than 25 kg.

Storage

- Maier rotary joints are not suited for storage in the original package for more than 6 months.
- For periods of extended shutdown or storage of the rotary joints, it is recommended to use a suitable corrosion protection sheet as provided, for example, by Cortec Corp. (www.CortecVCI.com).
- The storage room must be free from dust, sufficiently ventilated and not subject to major temperature changes (relative humidity below 65%, temperature between 15°C and 30°C).
- After a storage time of more than 2 years or when the package has been damaged or the unit has been subjected to shocks, the rotary joint must be checked in the factory or the nearest service center!
- If you want to preserve complete system components with the rotary joint attached, make sure the corrosion protection is compatible with the materials and sealing elements used. Otherwise there is the risk of chemical reactions and deposits at sealing and bearing elements.

© 2024 by Christian Maier & Co. KG. This document may not be copied or disclosed to third parties.
All rights, including copyright and property rights, reserved by Christian Maier GmbH & Co. KG

6 Information on design and mounting and operation

The following must be noted for fast and reliable mounting and commissioning, for safe operation of the rotary joint and for ensuring that the warranty will not be void:

- Never operate the rotary joint outside of the application and performance limits specified.
- For smooth operation of rotary joint ensure concentricity and minimum run-out tolerance of roller and intermediate flange!
- The information on the admissible mounting position of the rotary joint provided in the section "Specifications and Spare Parts" must be adhered to.
- For the connection, use flexible hoses between the supply system and the rotary joint housing. This compensates for heat expansion and vibrations.
- Never apply torsional, tensile or pressure loads to metal hoses. Observe the minimum bending radius as specified by the manufacturer – if in doubt, contact your hose vendor. Section 7.2.1 provides examples of possible hose installation.
  Never use axial compensators.
- Use flat packings made of pure graphite to securely seal flange connections.
- Only operate the rotary joint with a sufficiently dimensioned torque support at the housing. Use a locking pin or an anti-rotation fork. The support element must allow for axial and radial movements of the housing.
- Additionally provide for a safety device for rotary joint with rolling bearing:
  Install a torque monitoring system or a bearing monitoring system with vibration pickup (e.g. FAG or SKF) with connection to the emergency shutdown system in order to avoid bearing damage and consequential damage.
  Refer to the section "Specifications and Spare Parts" for limit values concerning the admissible friction torque.
  Section 7.2.1 provides an example of the possible anti-rotation design of the housing.
  If the monitoring system is activated, the rotation of the roller should be stopped immediately and the supply of the fluid should be interrupted upstream of the metal hoses.
- Center the inner pipe and the roller as well as the rotary joint. Run-out and axial tension of the inner pipe will lead to malfunctions of the rotary joint.
- In the case of greater nominal diameters of the rotary joint, long inner pipes or high speeds, it is recommended to separate the inner pipe in the area of the rotor connection. This facilitates mounting of the rotary joint and in reduces the wear and tear at the bearing bushing for the inner pipe.
- In the case of a rotary joint with rotating inner pipe, it is recommended to use a stainless steel inner pipe or at least a hard chromium-plated bearing seat.
- To ensure operational reliability and service life of the seal installed in the rotry joint, we recommend that the media specification given in the Specification and Spare Parts section be observed. Other media on request.
- Supplementary specifications for correct and safe operation can be found in the Specification and Spare Parts section of the instructions, if applicable.

© 2024 by Christian Maier & Co. KG. This document may not be copied or disclosed to third parties.
All rights, including copyright and property rights, reserved by Christian Maier GmbH & Co. KG

Information



Also refer to section 4.5 for additional information.

© 2024 by Christian Maier & Co. KG. This document may not be copied or disclosed to third parties.
All rights, including copyright and property rights, reserved by Christian Maier GmbH & Co. KG

7 Mounting

Note

Remove all protective plugs before installation! These only prevent dirt particles from entering the rotary joint during storage and delivery.

7.1 Mounting with threaded rotor

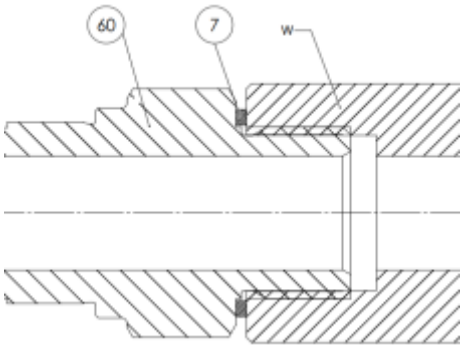

Figure 4

1. The rotor [60] has either a right-hand or a left-hand thread (R/L) on one end. A sealing ring or an O-ring is used for sealing.

2. Screw rotary joint into the roller [W].

© 2024 by Christian Maier & Co. KG. This document may not be copied or disclosed to third parties.
All rights, including copyright and property rights, reserved by Christian Maier GmbH & Co. KG

Warning



The direction of roll rotation and thread direction must be selected in such a way that independent loosening is impossible! Rotors with the same thread direction as the direction of roll rotation must be secured against loosening! Rotors with left-hand threads are marked with grooves on the wrench flat.

7.2 Connecting the rotary joint

7.2.1 Anti-Rotation Device

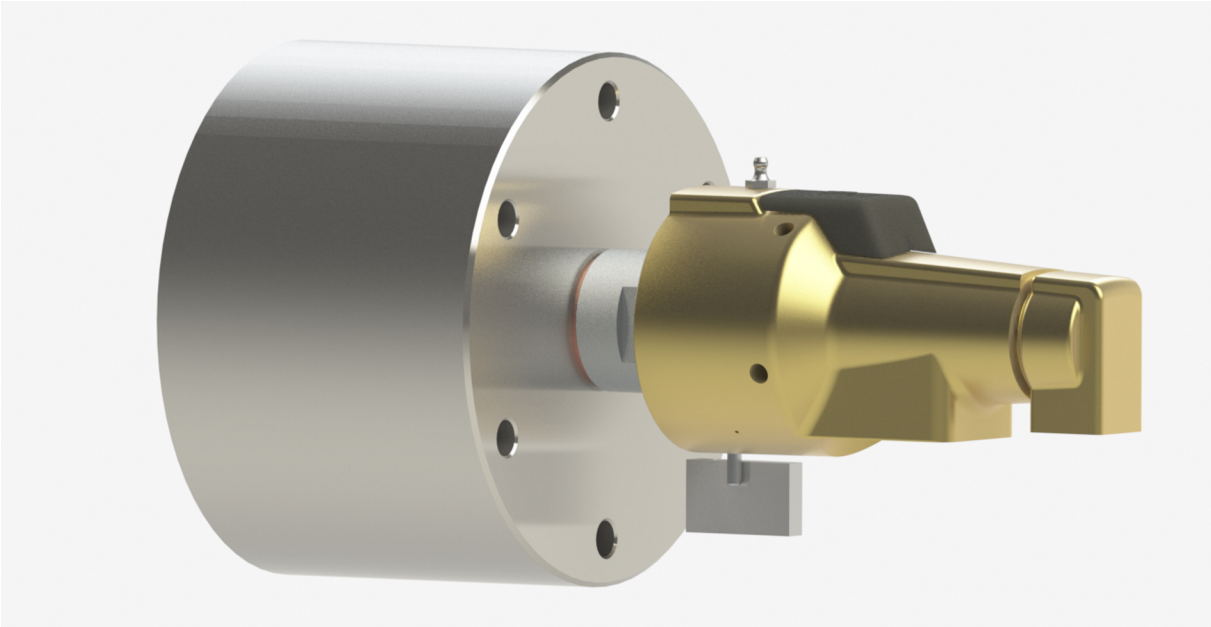

Figure 5: Anti rotation device

The anti-rotation device is a radial stop at the shaft screw. Make sure to observe the direction of rotation of the rotor. The anti-rotation device has to be attached to the machine frame.

© 2024 by Christian Maier & Co. KG. This document may not be copied or disclosed to third parties.
All rights, including copyright and property rights, reserved by Christian Maier GmbH & Co. KG

Warning



For safety reasons, always provide an anti-rotation device.

Information



Refer to chapter 4 for important additional information on this section.

7.2.2 Rotary joint hosing

The following sections show examples of the design of the flexible connection elements:

Green Arrows represent permissible movement (to be aimed for).

Red Arrows represent Impermissible movement (to be avoided).

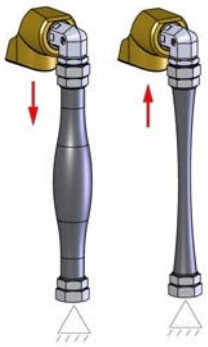

Figure 6

© 2024 by Christian Maier & Co. KG. This document may not be copied or disclosed to third parties.
All rights, including copyright and property rights, reserved by Christian Maier GmbH & Co. KG

Do not compress or extend the lines.

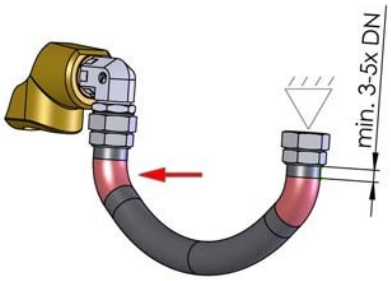

Figure 7

To increase the service life, add a length of 3-5x DN per connection to the length calculated on the basis of the permissible bending radius.



Figure 8

Avoid connection offset. Take length changes into account in the case of bending.

© 2024 by Christian Maier & Co. KG. This document may not be copied or disclosed to third parties.
All rights, including copyright and property rights, reserved by Christian Maier GmbH & Co. KG

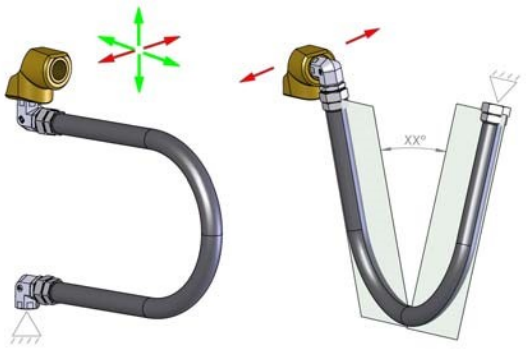

Figure 9

Take into account limited degrees of freedom and the minimum permissible bending radius.

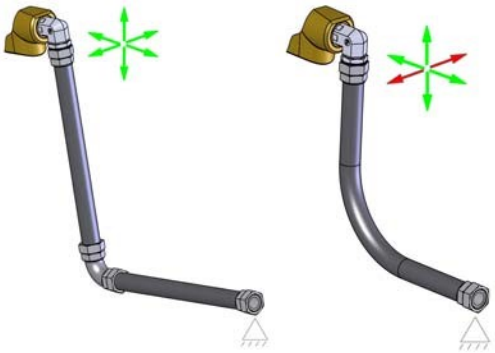

Figure 10

If possible, use fixed elbows, dual-line version, for bends.
All degrees of freedom are possible without tension if the length is sufficient.

© 2024 by Christian Maier & Co. KG. This document may not be copied or disclosed to third parties.
All rights, including copyright and property rights, reserved by Christian Maier GmbH & Co. KG

7.3 Tightening torques for fastening screws

Information



The material and the property class is indicated by the designation of the fastening element.
All fastening torques are dedicated to a screw temperature of 20 °C.
Please inquire for data on other materials.

Tightening torques in Nm

Size	Property class 5.6	Property class 8.8
M6	4	10
M8	10	24
M10	18	48
M12	37	82
M16	90	206
M20	175	400

Properity class 50

Size	Friction coefficient 0.12	Friction coefficient 0.14
M6	3,1	3,6
M8	7,6	8,4
M10	15,4	16,7
M12	26,0	28,9
M16	63,0	70,0
M20	128,0	142,0

Properity class 70

Size	Friction coefficient 0.12	Friction coefficient 0.14
M6	6,7	7,4
M8	16,3	17,8
M10	33,0	36,0
M12	56,0	62,0
M16	136,0	150,0

© 2024 by Christian Maier & Co. KG. This document may not be copied or disclosed to third parties.
All rights, including copyright and property rights, reserved by Christian Maier GmbH & Co. KG

Tightening torques in Nm		
M20	274,0	303,0

© 2024 by Christian Maier & Co. KG. This document may not be copied or disclosed to third parties.
All rights, including copyright and property rights, reserved by Christian Maier GmbH & Co. KG

8 Operation

Material damages



1. The rotary joints must never run dry as this may cause damage to the rotary joint, and the maximum permissible surface temperature may be exceeded. As a general rule, dry-run of the rotary joint is not permissible. Exception: Test run for max. 30 minutes at maximum 10% of the admissible max. operating speed, or if operating speeds are very low, 10 1/min should not be exceeded. A possible suitability of special rotary joints for dry run is specifically indicated in the operating instructions and the declaration of conformity.
2. Sudden temperature and pressure loads will cause damage to the rotary joint. Maximum temperature change during start-up $\Delta T \leq 2$ K/min.
3. Exceeding the permissible application data as determined in chapter "Specifications and Spare Parts" will cause damage to the rotary joint. Avoid a combination of maximum values.

8.1 Commissioning

During initial commissioning, minor amounts of drops of leaking fluid may occur during the breaking in period of the dynamic seal. The duration of the breaking in period depends on the speed and the pressure; usually, it is terminated after a few days.

To avoid premature damage to seals in the rotary joint, it is recommended to check the installed filters for the fluid at more frequent intervals when a new system is commissioned for the first time. During this period, expect more pollution such as chips, rust or scales in the piping system. This is particularly true if the system has not been flushed prior to the initial startup.

8.2 During operation

Check the following points:

© 2024 by Christian Maier & Co. KG. This document may not be copied or disclosed to third parties.
All rights, including copyright and property rights, reserved by Christian Maier GmbH & Co. KG

- Centric arrangement of the rotor to the roll neck: The radial deflection in the rear area of the housing must not exceed the values under Permissible radial runout(see Aligning the rotary joint when sealing with a flat seal).
- Quality of the medium in the system: Record the tested data. The default values can be found in the Specification and Spare Parts section.
- Visible leakage of the rotary joint at the relief port: The operating behavior of the installed mechanical seal does not usually change abruptly. A failure of the seal is indicated by a slow increase in the leakage values. In this way, reliable empirical values can be collected about the operating behavior of the rotary joint at the plant.

8.3 Troubleshooting

Problem	Cause	Remedy
leakage at the housing through the relief holes	• mechanical seal damaged or worn	• install a new mechanical seal • check the quality of the medium and the condition of the bearings
noise and wobbling	• insufficient lubrication • bearing worn • bearing damaged	• overhaul or repair; observe the lubrication intervals! • replace rotary joint if damaged
friction torque exceeded	• bearing damaged • sealing element damaged • moving parts brush against each other • permissible application data exceeded	• inspection of the rotary joint and the system.
leakage at sealing points	• flat packing or sealing element damaged • screw torque of connection insufficient	• replace flat packing or sealing element during the next planned shutdown. If there is considerable leakage, imme diately put the rotary joint out of operation. • tighten the screws with the correct torque as per section 7.3 . Do not overload screws as this will destroy them. Immediately replace overloaded screws!

© 2024 by Christian Maier & Co. KG. This document may not be copied or disclosed to third parties.
All rights, including copyright and property rights, reserved by Christian Maier GmbH & Co. KG

9 Maintenance

9.1 Maintenance plan

Interval	Activity	Explanation
refer to section "Specifications and Spare Parts"	relubricate the roller bearings if they are equipped with a lubricating nipple	lubricant quantity see section "Specifications and Spare Parts"
every 12 months	• replace bearings • replace seals	recommended to be done by Maier customer service

Information



Maier supports you during operation over the entire life cycle and offers:

- Repair service on site or at Maier by specialists with full warranty
- Training of your onw service personnel.

- Observe the safety instructions in chapter 4 .
- Maintenance may only be performed by authorized staff as per chapter 4.4 .
- Work on the rotary joint may only performed when the machine/system is at a standstill in depressurized condition and after the rotary joint has cooled down.
- Always wear safety glasses when performing work on the rotary joint to protect against escaping fluid.
- Use only genuine spare parts.
- If you have removed protective equipment, refit such equipment after having finished your work and verify proper operation of such equipment.
- All screws must be tightened with the specified tightening torque (refer to section "Specifications and Spare Parts").

© 2024 by Christian Maier & Co. KG. This document may not be copied or disclosed to third parties.
All rights, including copyright and property rights, reserved by Christian Maier GmbH & Co. KG

10 Repair

10.1 Tools

- Suitable lifting gear must be used to mount the rotary joint to the roller.
- A torque wrench must be used for tightening screws with a specified tightening torque.

10.2 Dismounting the rotary joint from the roller

Prerequisites

- Depressurize the rotary joint.
- Drain the medium contained in the roller.
- Rotary joint needs to be cooled down. T < 40°C
- Remove the protective cover and the anti-rotation device.

Warning



Risk of injury if medium under pressure escapes.
Make sure that shut-off valves cannot be opened inadvertently or intentionally during repair work.

© 2024 by Christian Maier & Co. KG. This document may not be copied or disclosed to third parties.
All rights, including copyright and property rights, reserved by Christian Maier GmbH & Co. KG

Information



Refer to the operating instructions of the complete system for any further information on properly performing preparatory work.

Prerequisite

1. Dismount the housing connections.
2. Secure the rotary joint with a belt or via the eye bolt and a crane.
3. Loosen the connection between rotor and roller.
   – In the case of thread at rotor by unscrewing with wrench at wrench surfaces.
   – In the case of flange connection at rotor by removing the screws at the flange.
   Slowly pull the rotary joint out of the flange. If the rotary joint cannot be pulled out easily, loosen it from the centering unit by slightly moving it up and down with the crane.

10.3 Dismantling the Rotary Joint

Prerequisite

The rotary joint must have been dismounted from the roller.

Information



The design of the rotary joints is shown in the section "Specifications and Spare Parts".

© 2024 by Christian Maier & Co. KG. This document may not be copied or disclosed to third parties.
All rights, including copyright and property rights, reserved by Christian Maier GmbH & Co. KG

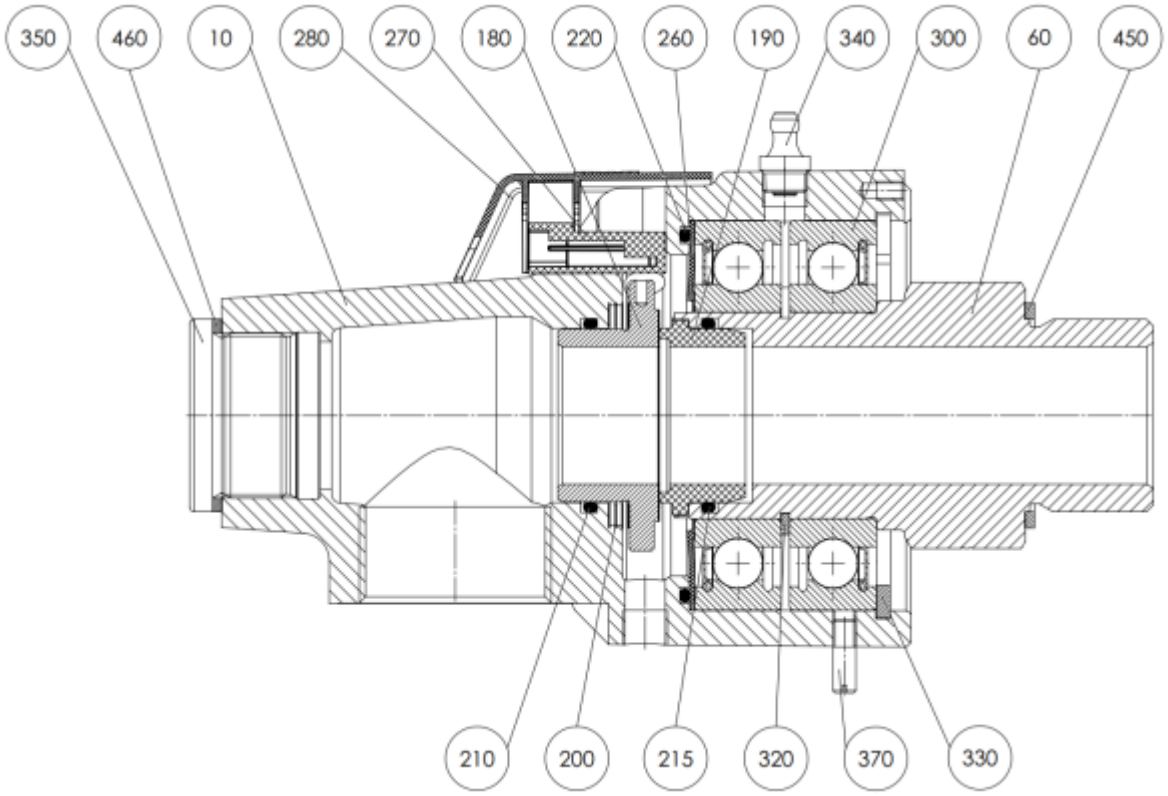

Figure 11

1. Remove retaining ring [330] situated in the housing [10].
2. Pull the rotor [60] with the bearings [300] out of the housing [10].
3. Remove bearing protection seal [260] from the housing [10].
4. Remove o-ring [220] from the housing [10].
5. Pull out the sealing ring [180].
6. Remove compression spring [200].
7. Remove o-ring [210], do not damage o-ring groove.
8. Pull the counter ring [190] out of the rotor [60].
9. Remove o-ring [215], do not damage o-ring groove.
10. Strip off the first bearing [300] from rotor [10].
11. Remove the retaining ring [320] from the rotor [60].
12. Remove the second bearing [300] from the rotor [60].
13. Remove sealing ring [450].
14. Replace grease nipple [340] if damaged.

© 2024 by Christian Maier & Co. KG. This document may not be copied or disclosed to third parties.
All rights, including copyright and property rights, reserved by Christian Maier GmbH & Co. KG

10.4 Assembly of the rotary joint

Notice



All wearing parts V listed in the spare and wearing parts list in section "Specifications and Spare Parts" have to be replaced in every 12 months, spare parts E only if necessary.

Notice



Never oil or lubricate the sealing surfaces of the mechanical seal 1, 3 and 5. When using sealing combination 4 (SIC/SIC) apply a very thin film of Klueberoil 4 UH1-220N to the sealing surfaces of the mechanical seal. Remove excess oil with a lint-free cloth. Apply a very thin film of a suitable lubricant to sealing rings (O-rings) and shaft seals made of elastomer. Do not bring them into contact with mineral oil based lubricants (failure of the seals due to swelling or decomposition)! Use a suitable lubricant approved for contact with food. (FDA/NSF)
Do not use force to assemble the components!

Prerequisite

Only use new spare parts and wearing parts.

Note



The parts are mounted in the same way as they are dismounted, but in reverse order.

© 2024 by Christian Maier & Co. KG. This document may not be copied or disclosed to third parties.
All rights, including copyright and property rights, reserved by Christian Maier GmbH & Co. KG

Note



Assembly videos on our website www.maier-heidenheim.com provides you with valuable tips on and mounting.
Refer to the tab “Operating Instructions”.
The videos are available in German and English.

© 2024 by Christian Maier & Co. KG. This document may not be copied or disclosed to third parties.
All rights, including copyright and property rights, reserved by Christian Maier GmbH & Co. KG

11 Warranty

Christian Maier GmbH & Co. KG grants these services in addition to the seller's statutory warranty claims under the purchase contract and in no way affects your rights as an end user.

11.1 Starting, duration and verification of the warranty

For all new products or products repaired by Maier (headquarter and subsidiaries), we grant - unless otherwise agreed - a warranty period of:

1. 12 months after commissioning of the product, but no longer than

2. 18 months after delivery of the product.

A warranty claim is only granted if the product has been used as intended. The warranty claim expires if the product has been opened or modified without consulting us.

11.2 Prerequisites for a guarantee commitment

A notice of defect must be received by us in writing immediately after discovering the defect and prior to before expiration of the warranty period.
For the recognition of any warranty claims, the submission of a machine-generated purchase receipt (copy is sufficient) indicating the date of purchase and type designation is required.

11.3 Content and scope of warranty

Service technicians of Maier or an authorized Maier service partner will resolve any material or manufacturing defects occurring within the warranty period free of charge, either by repair or by replacement/exchange of the parts concerned. Replaced parts become the property of Maier.
The warranty does not cover any further claims for damages against Maier.
The warranty expires if faults or defects are due to:

1. Normal wear and tear, especially in the case of seals, bearings, etc.

© 2024 by Christian Maier & Co. KG. This document may not be copied or disclosed to third parties.
All rights, including copyright and property rights, reserved by Christian Maier GmbH & Co. KG

2. Incorrect installation, e.g. failure to observe the applicable regulations or installation instructions and our operating instructions.
3. Use contrary to the intended purpose as well as improper operation or use.

11.4 Statute of limitation

Claims under this warranty due to a defect discovered within the warranty period may only be asserted until the expiration of the warranty period.

© 2024 by Christian Maier & Co. KG. This document may not be copied or disclosed to third parties.
All rights, including copyright and property rights, reserved by Christian Maier GmbH & Co. KG

12 Disposal

12.1 Dispose of packaging

Dispose of the packaging (cardboard and plastics) in accordance with the country-specific standards, regulations and guidelines.

12.2 Dispose of rotary joint

The rotary joint are mainly made of metals which you can recycle as part of scrap metal recycling. Dispose of materials in such a way that disposal is demonstrably compatible with people, nature and the environment. Make sure that the rotary joint you dispose of are free of the flow media used.

- Disassemble the rotary joint according to chapter 10.2 .
- Flush out the rotary joint .
- Collect the contaminated flushing liquid.
- Dispose of the collected flushing liquidin accordance with the country-specific standards, regulations and directives.
- If you have worked with thermal oil, observe the specifications of the thermal oil manufacturer.
- Dispose of the rotary joint according to the country-specific standards, regulations and guidelines.

As part of a repair by Maier Service or by a service partner certified by Maier, the old parts are disposed of for you.

© 2024 by Christian Maier & Co. KG. This document may not be copied or disclosed to third parties.
All rights, including copyright and property rights, reserved by Christian Maier GmbH & Co. KG

13 Specification and Spare Parts

13.1 Application data

Series	DS
Type	DS 150L111
Nominal Diameter DN (mm)	50
Test pressure when idle (bar)	14.0

Water

Temperature min - max (°C)	-10.0 ... 80.0
Pressure PN min - max (bar)	-0.2 ... 10.0
Speed max (min-1)	520.0

Avoid combining the maximum data! Higher values and other products on request.

13.2 Media Specification

Water

© 2024 by Christian Maier & Co. KG. This document may not be copied or disclosed to third parties.
All rights, including copyright and property rights, reserved by Christian Maier GmbH & Co. KG

- Raw water: drinking water quality
- General: clear, no sediments
- Filtration: particle size 20 µm, max. 50µm
- Recommendations according to VdTÜV- Guideline TCh 1466 "Guideline for Circulation Water in Hot Water and Warm Water Heating Systems" ("Richtlinie für das Kreislaufwasser in Heißwasser – und Warmwasserheizungsanlagen), sheet 1, for low salt concentration
  - Electrical conductivity at 25 °C: 30 – 100 µS/cm
  - ph-value at 25 °C: 9.0 – 10.5
  - Oxygen: < 0.05 mg/l
  - Hardness (alkaline earths): < 0.02 mmol/l
- If required, add a suitable antifreeze agent and a silicate-free anticorrosion agent (ensure compatibility with the materials used in the unit, check back with manufacturer, if necessary).

13.3 Information on design and mounting and operation

Maier series DS rotary joints are equipped with contacting seals and rolling bearings. The table below lists the friction torque depending on the nominal width DN generated during rotation at maximum operating pressure and speed of rotation to allow for torque monitoring recommended for safety reasons.

The following applies to the individual columns:

Column **Normal**: The friction torque to be expected during normal operation.

Column **Warning**: If these values are exceeded, the rotary joint and the installation should be checked within the next 3 days.

Column **Stop**: If these values are exceeded, stop the rotary joint immediately for safety reasons; check and repair it, if necessary!

Friction torque for Maier rotary joints series DS at maximum pressure PN (Observe the information provided below)

Nominal diameter (mm)	Limit values Normal (Nm)	Limit values Warning (Nm)	Limit values Stop (Nm)
50	2.0	4.0	6.0

© 2024 by Christian Maier & Co. KG. This document may not be copied or disclosed to third parties.
All rights, including copyright and property rights, reserved by Christian Maier GmbH & Co. KG

Further torques may be generated during operation of the rotary joint in addition to the friction torques listed. These additional torques may be caused by tilting as a result of horizontal housing connection pieces, shut-off valves mounted directly to the housing connection piece or by righting forces generated by the metal hoses for the supply of the fluid. If the roller with the connected rotary joint is to move during running, the hoses may also cause additional loads as a result of righting forces of the hoses. All these additional loads which cause an additional torque must be considered in defining the switching point for the pre-alarm and the main alarm.

13.4 Initial Lubrication and Relubrication

The rotary joints are factory-lubricated with PETAMO GY 193 by Klüber Lubrication KG. (Phone: +49-(0)89-7876-271 | www.klueber.com)

Relubrication at nipple – used grease escapes via the bearing housing.

NOTE



Warranty is forfeited when using other greases

Initial Lubrication Bearing 1 17.4 cm^3 spaces filled to 50%
Initial Lubrication Bearing 2 17.4 cm^3 spaces filled to 50%
Relubrication 15.0 Strokes of a grease gun according to DIN 1238 with 1,2 cm^3 /stroke
The relubrication intervals are recommended values. Reduce the intervals to one half in the case of exceptional operating or environmental conditions (such as high pressures or loads, heavy machine vibrations or polluted bearing grease). Experiences of the owner/operator can be considered in optimizing the lubrication intervals.

Temperature	Interval
Up to 80 °C	Factory life time Lubrication
80 °C to 120 °C	Every 6 Months
120 °C to 140 °C	Every 12 Weeks
140 °C to 160 °C	Every 2 Weeks

© 2024 by Christian Maier & Co. KG. This document may not be copied or disclosed to third parties.
All rights, including copyright and property rights, reserved by Christian Maier GmbH & Co. KG

This document is protected under the laws of copyright. Every use or processing (even partially) that was not agreed upon is prohibited. This applies especially to copying, disclosure to third parties or any other form of publication. All rights, including that for the case of patent application, reserved.

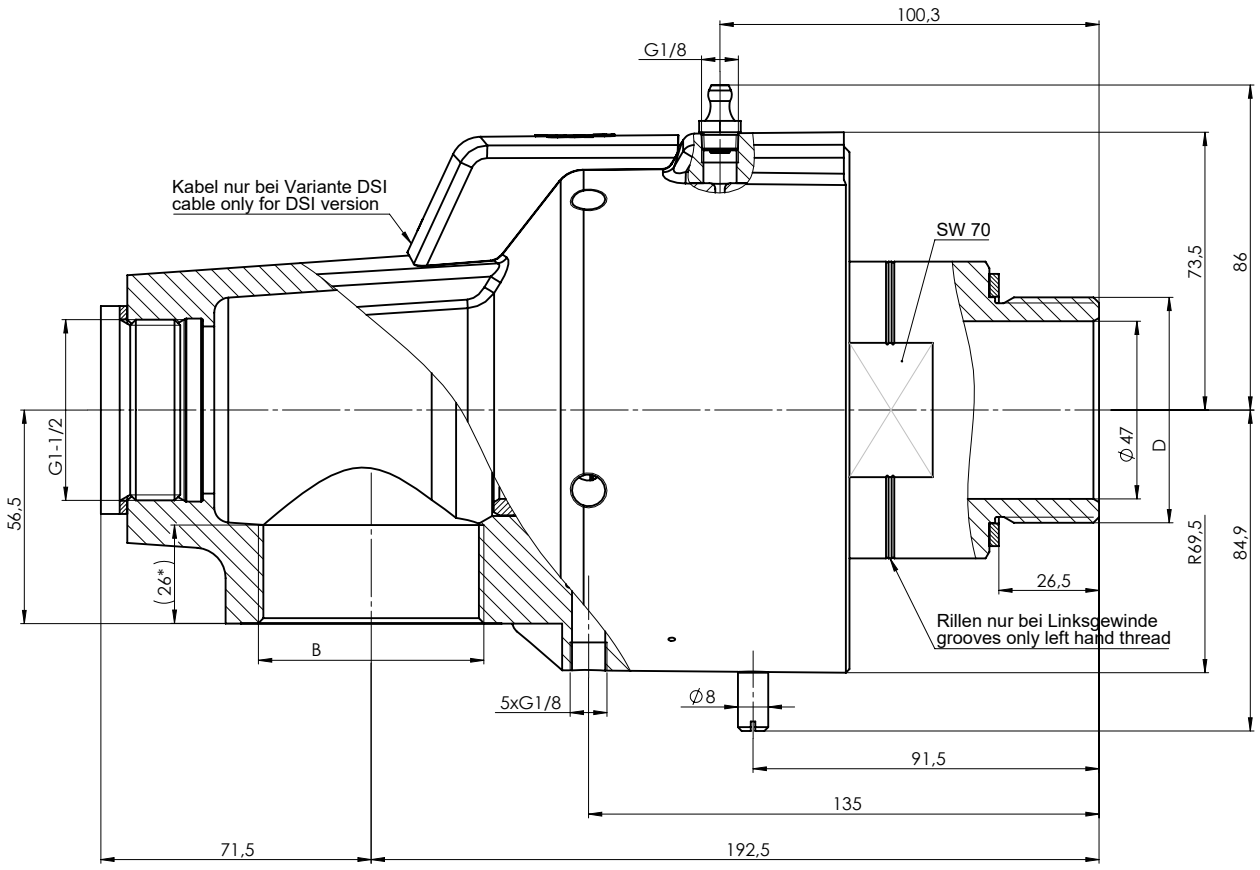

Artikelnummer/ part number	Bezeichnung/ description	Anschluss B/ connection B	Anschluss D/ connection D
1124000688	DS 150R511	G 2"	G 2" RH
1124000689	DS 150L511	G 2"	G 2" LH
1124000691	DS 150R512	2" NPT	G 2" RH
1124000692	DS 150L512	2" NPT	G 2" LH
1124000697	DS 150R311	G 2"	G 2" RH
1124000698	DS 150L311	G 2"	G 2" LH
1124000701	DS 150R312	2" NPT	G 2" RH
1124000702	DS 150L312	2" NPT	G 2" LH
1124000707	DS 150R411	G 2"	G 2" RH
1124000708	DS 150L411	G 2"	G 2" LH
1124000711	DS 150R412	2" NPT	G 2" RH
1124000712	DS 150L412	2" NPT	G 2" LH
1124001761	DS 150R111	G 2"	G 2" RH
1124001762	DS 150L111	G 2"	G 2" LH
1124001765	DS 150R112	2" NPT	G 2" RH
1124001766	DS 150L112	2" NPT	G 2" LH
1124002971	DSI 150R511	G 2"	G 2" RH
1124002972	DSI 150L511	G 2"	G 2" LH
1124002975	DSI 150R512	2" NPT	G 2" RH
1124002976	DSI 150L512	2" NPT	G 2" LH
1124002981	DSI 150R111	G 2"	G 2" RH
1124002982	DSI 150L111	G 2"	G 2" LH
1124002984	DSI 150R112	2" NPT	G 2" RH
1124002985	DSI 150L112	2" NPT	G 2" LH
1124002990	DSI 150R311	G 2"	G 2" RH
1124002991	DSI 150L311	G 2"	G 2" LH
1124002993	DSI 150R312	2" NPT	G 2" RH
1124002994	DSI 150L312	2" NPT	G 2" LH
1124002999	DSI 150R411	G 2"	G 2" RH
1124003000	DSI 150L411	G 2"	G 2" LH
1124003003	DSI 150R412	2" NPT	G 2" RH
1124003004	DSI 150L412	2" NPT	G 2" LH

*Einschraubtiefe nur gültig für Gewindeausführung G
screw in depth only valid for thread type G

Diese Unterlage ist urheberrechtlich geschützt. Jede nicht verabredete Verwendung oder Bearbeitung (auch teilweise) ist verboten. Dies gilt insbesondere für Veröffentlichung. Weitergabe an Dritte sowie sonstige Formen der Veröffentlichung. Alle Rechte, auch für den Fall der Patenterteilung, vorbehalten.

Index	Änderung / Modification	Datum / Date	Name

Allgemeintoleranzen nach / general tolerances according to ISO 2768 m K | Oberflächenbeschaffenheit nach / Surface texture according to ISO 1302

Projektionsmethode nach Projection method acc. to DIN ISO 128

Werkstückkanten nach Workpiece edges acc. to DIN ISO 13715

	Datum / Date	Name
Created	25.01.2024	cmu
Reviewed	29.01.2024	cmu
Approved	07.02.2024	cmu

Prüfplan-Nr. / Quality control plan no.

Dokumentenstatus / Status of doc.: freigegeben / released

Blattformat / Page format: A2

Maßstab / Scale: 1:1

Benennung: DSI(I) 150 R/L (P)

Designation: DSI(I) 150 R/L (P)

Zeichn.-Nr. / Drawing no.: MB 15488

Blatt / Sheet: 1/1

Art.-Nr. / Part ID: -siehe Tabelle / see chart-

Ersetzt aus / Devel. from: -

Ers.für / Replaces for:

Ers.durch / Replaced by:

maler GROUP

Schnitt/Section A-A

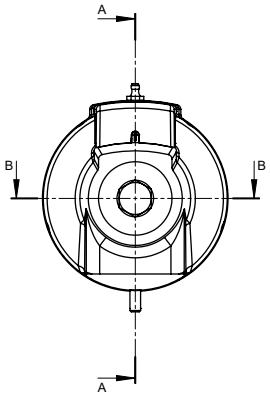

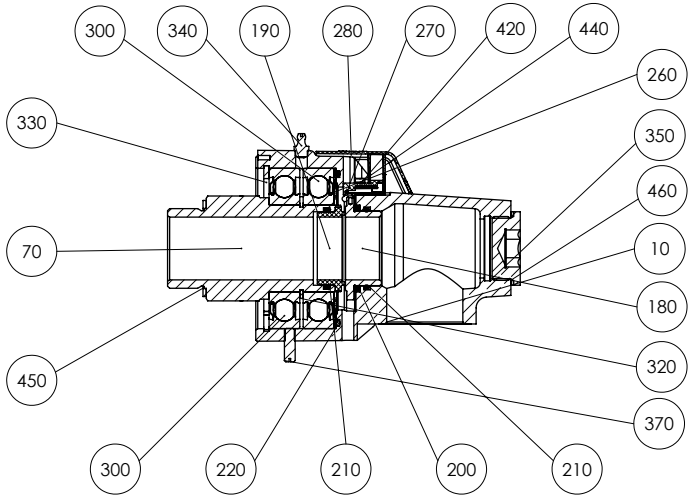

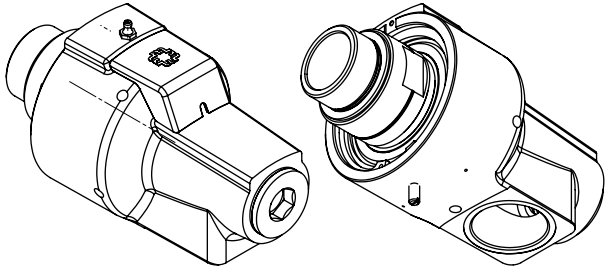

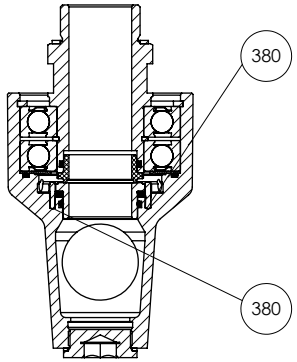

Schnitt/Section B-B

This document is protected under the law of copyright. Every use or processing (even partially) that was not agreed upon is prohibited. This applies especially to reproduction, distribution, editing and translation. All rights, including that to the case of patent application, reserved.

Diese Unterlage ist urheberrechtlich gesch tzt. Jede nicht vereinbarte Verwertung oder Bearbeitung auch teilweise ist verboten. Dies gilt insbesondere f r Vervielf ltigung, Verbreitung, Einspeicherung und Verarbeitung. Alle Rechte, auch f r den Fall der Patenterteilung, vorbehalten.

Diese Zeichnung wurde automatisch erstellt.
This drawing was created automatically.

| | | |

13.5 Parts List

Rotary Joint: DS 150L111
Article number: 1124001762
Drawing number: MB 15488, 1124001762-ET

E = Spare part
V = Wearing part

Item	Item#	Quantity	Unit	E/V
10	1124001236	1.0	St.	-
70	1124001380	1.0	St.	-
180	1124001480	1.0	St.	V
190	3511397-001	1.0	St.	V
200	3518262	1.0	St.	-
210	3511696-067	2.0	St.	V
220	3511828-067	1.0	St.	V
260	3518275	1.0	St.	V
270	3509509	1.0	St.	V
280	3509517	1.0	St.	V
300	3510090	2.0	St.	V
320	3501030	1.0	St.	V
330	3501246	1.0	St.	V
340	3500913-002	1.0	St.	-
350	3500634-001	1.0	St.	-
370	3500677	1.0	St.	-
380	3500890-004	2.0	St.	-
420	3503093-077	1.0	St.	V
440	3518295	1.0	St.	V
450	3502121-001	1.0	St.	V
460	3502118-001	1.0	St.	V

Suitable repair kit: 1124003929

This contains all functionally relevant wear parts. Please specify exact rotary joint designation when inquiring or placing orders!

© 2024 by Christian Maier & Co. KG. This document may not be copied or disclosed to third parties.
All rights, including copyright and property rights, reserved by Christian Maier GmbH & Co. KG