REFERENCE	NOM. VOL. (litres)	ØD (mm)	H (mm)	E (mm)	ØC	P MAX (bar)	PRECHARGE ±20% (bar)	System temperature
SUN 5	5	160	316	-	G3/4"	10	2,5	-10÷+130°C
SUN 8	8	200	326	-	G3/4"	10	2,5	-10÷+130°C
SUN 12	12	270	308	-	G3/4"	10	2,5	-10÷+130°C
SUN 18	18	270	393	-	G3/4"	10	2,5	-10÷+130°C
SUN 25	25	300	436	-	G3/4"	10	2,5	-10÷+130°C
SUN 35	35 W.F.	380	385	135	G3/4"	10	2,5	-10÷+130°C
SUN 50	50 W.F.	380	523	153	G3/4"	10	2,5	-10÷+130°C
SUN 80	80	450	626	150	G1"	10	2,5	-10÷+130°C
SUN 105	105	500	683	165	G1"	10	2,5	-10÷+130°C
SUN 150	150	500	915	216	G1"	10	2,5	-10÷+130°C
SUN 200	200	600	830	225	G1"	10	2,5	-10÷+130°C
SUN 250	250	630	975	245	G1"	10	2,5	-10÷+130°C
SUN 300	300	630	1123	245	G1"	10	2,5	-10÷+130°C
SUN 400	400	630	1495	245	G1"	10	2,5	-10÷+130°C
SUN 500	500	750	1385	290	G1"	10	2,5	-10÷+130°C
SUN 600	600	750	1505	290	G1"	10	2,5	-10÷+130°C

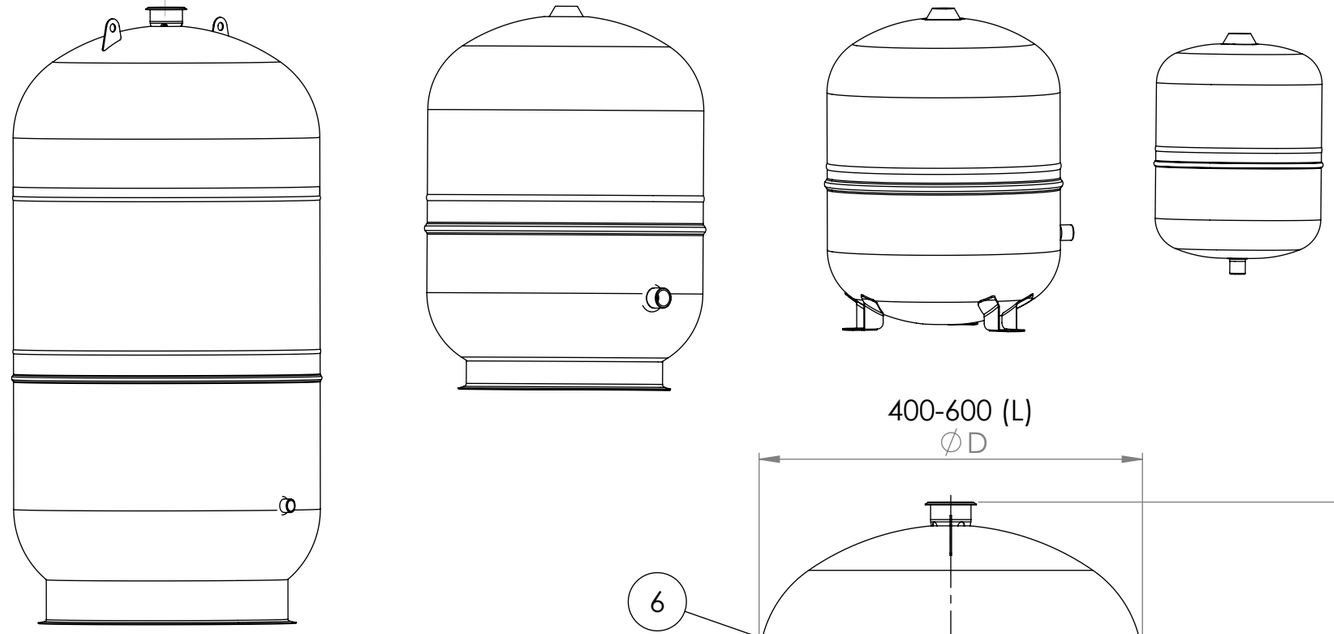

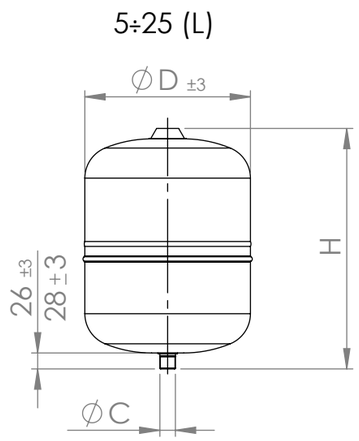

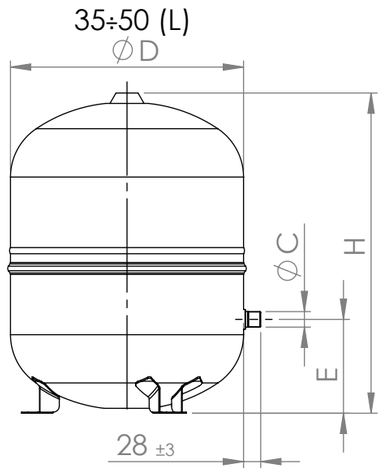

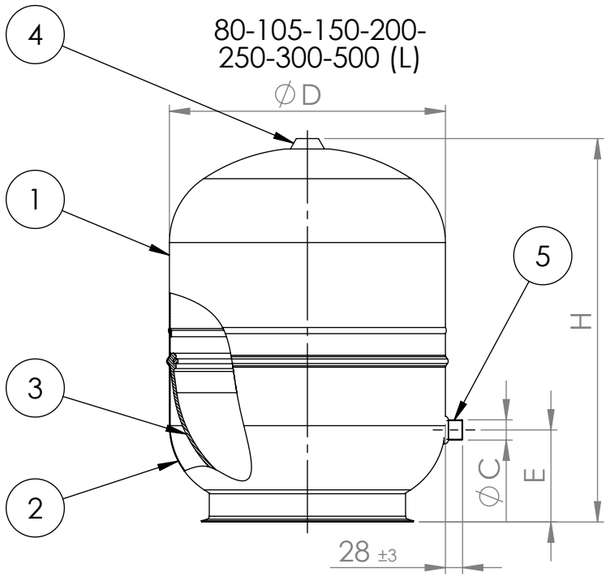

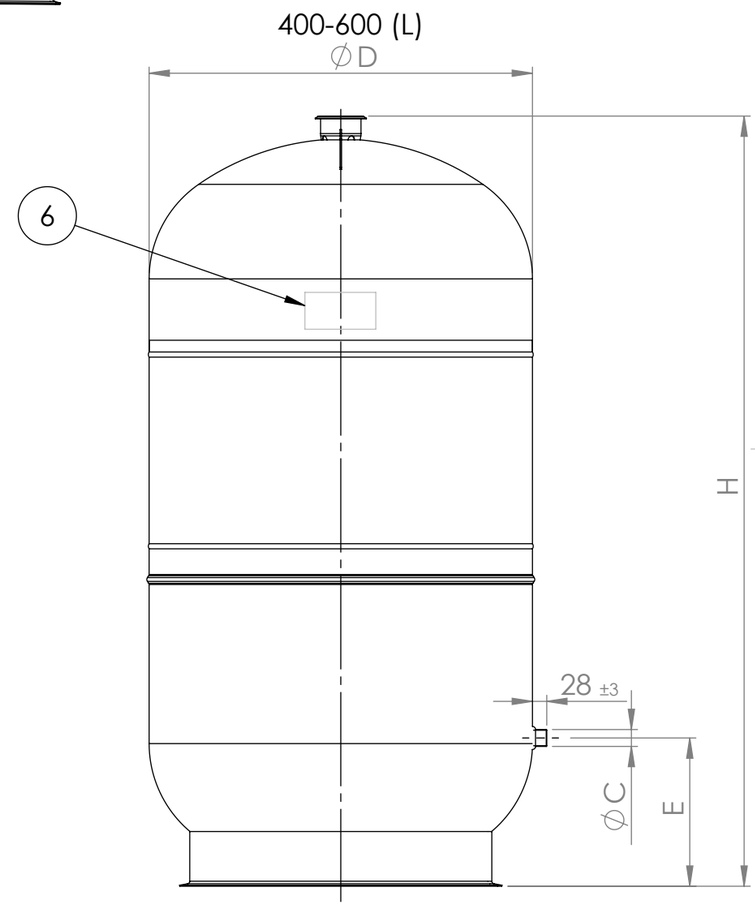

Pos.	Denomination	Q.ty	Material
1	UPPER HEAD	1	CARBON STEEL
2	DOWNER HEAD	1	CARBON STEEL
3	MEMBRANE	1	SYNTHETIC RUBBER
4	PRECHARGE VALVE	1	-
5	THREADED NOZZLE	1	CARBON STEEL
6	SELF-ADHESIVE LABEL	1	-
7	SUPPORT BRACKET	-	-
8	CLOSURE FLANGE	-	-
9	-	-	-

Revisioni		
Rev.	Descrizione	Data
04	REDESIGNED WITH S.W. - CHANGE H 600L-500L-400L	17/10/2016
05	UPDATED H 5L-8L	28/09/2020

GITRAL®
ZI DE BOURNAT F63190 ORLEAT

DRAWING N° SUN
SCALE 1:10
MATERIAL --
*:Tolerance variation bigger/lower than 20% do not compromise the expansion vessel functioning

	DATE	SIGNATURE
DRAWN	28/09/2020	
CHECKED	28/09/2020	
APPROVED CHERVIN	28/09/2020	

DENOMINATION
GITRASUN 5÷600L

CODE
11A200----

Dimensions in mm

This drawing is the property of company GITRAL S. A. All rights reserved.

A3

All dimension tolerances not indicated are ± 2% for lenght and ± 3mm for diameter