2.18 Motor type: LSN-074 (U_{dc} = 320 V)



2.18.1 Dimensional sketch and technical data

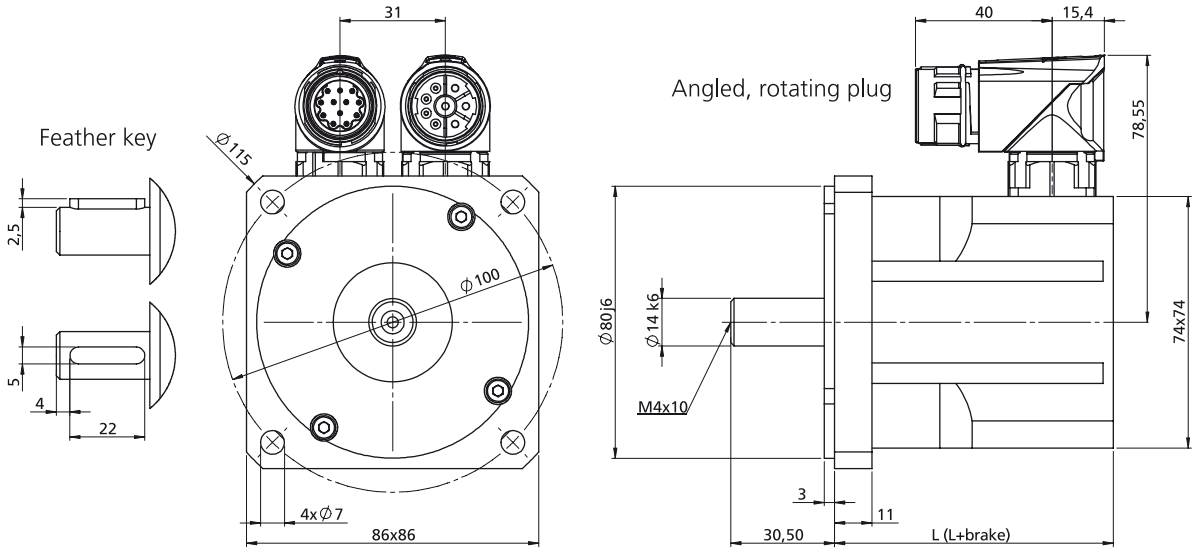

Motor type	L with resolver xR [mm]	L+brake with resolver xR [mm]	L with opt. encoder G12.xy [mm]	L+brake with opt. encoder G12.xy [mm]
LSN-074-0115	82	120	123	165.5
LSN-074-0205	100	138	141	183.5
LSN-074-0350	136	174	177	219.5
LSN-074-0480	172	210	213	In preparation

Motor type	L with opt. encoder G6.1x [mm]	L+brake with opt. encoder G6.1x [mm]	L with opt. encoder G6.2x [mm]	L+brake with opt. encoder G6.2x [mm]	L with opt. encoder G6.3x [mm]	L+brake with opt. encoder G6.3x [mm]
LSN-074-0115	101,5	148	99	In preparation	82	132
LSN-074-0205	119,5	166	117	In preparation	100	150
LSN-074-0350	155,5	202	153	In preparation	136	186
LSN-074-0480	191,5	238	189	In preparation	172	222

Table: Overview of motor lengths – for overview of encoder types see section 5.1

Order Catalogue: Servomotors
ID no.: 0814.25B.6-00 Date: 02/2013

Technical data [1]	Symbol	LSN-074-0115	LSN-074-0205	LSN-074-0350	LSN-074-0480
Rated speed	n_n	3000 rpm	3000 rpm	3000 rpm	3000 rpm
Rated frequency	f_N	250 Hz	250 Hz	250 Hz	250 Hz
DC link voltage (controller)	U_{dc}	320 V	320 V	320 V	320 V
Rated voltage	U_n	220 V	220 V	220 V	220 V
Rated torque	M_n	1.13 Nm	1.90 Nm	3.00 Nm	3.70 Nm
Rated current	I_n	2.30 A	3.10 A	4.30 A	4.50 A
Rated power	P	0.36 kW	0.60 kW	0.94 kW	1.16 kW
Stall torque	M_0	1.15 Nm	2.05 Nm	3.50 Nm	4.80 Nm
Stall current	I_0	2.00 A	2.80 A	4.20 A	4.80 A
Maximum permissible torque	M_{max}	3.50 Nm	6.20 Nm	10.50 Nm	14.40 Nm
Maximum permissible current	I_{max}	9.2 A	12.7 A	19.4 A	17.3 A
Maximum permissible speed	n_{max}	12000 rpm	12000 rpm	12000 rpm	12000 rpm
Voltage constant	K_E	34.5 V/1000 rpm	44.5 V/1000 rpm	50.0 V/1000 rpm	60.0 V/1000 rpm
Torque constant	K_T	0.57 Nm/A	0.74 Nm/A	0.83 Nm/	0.99 Nm/A
Winding resistance (2 phases)	R_{2ph}	8.40 Ω	5.40 Ω	2.80 Ω	2.50 Ω
Winding inductance (2 phases)	L_{2ph}	18.0 mH	13.3 mH	8.1 mH	7.5 mH
No load speed	n_0	6320 rpm	4920 rpm	4390 rpm	3660 rpm
Electrical time constant	T_{el}	2.1 ms	2.5 ms	2.9 ms	3.0 ms
Thermal time constant	T_{th}	21 min.	23 min.	27 min.	30 min.
Moment of inertia of the motor	J	0.000031 kgm²	0.000055 kgm²	0.000104 kgm²	0.000152 kgm²
Mass	m	1.50 kg	2.00 kg	2.90 kg	3.80 kg
Brake (optional)					
Rated voltage	U_N	24 V ± 10 %			
Rated current at 20 °C for venting	I_N	0.50 A			
Permissible maximum speed	n_{max}	10000 rpm			
Permissible friction energy	W_R	0.58 x 10^6 Ws			
Mass moment of inertia	J_B	0.000018 kgm²			
Mass	m	0.47 kg			
Braking torque	M_H	4.50 Nm			
Additional technical data					
Protection	IP64, optionally IP65 or IP67				
Electrical connections	Intercontec plug (x2)				
Thermal motor protection	PTC, optionally thermoswitch 140° C, KTY or NTC				
Nominal data	to EN 60034-1, T_A = 40° C, T_{over} = 110 K, flange temperature ≤ 65° C				
Servo amplifier	Stator windings for DC link voltage U_{dc} = 320 V or 560 VDC, other voltages optional				
Flange/shaft	to DIN 42955 N, optionally R				

1) All values with a tolerance of ± 10%. Other windings/rated speeds possible. Subject to technical change without notice.

2.18.2 **Characteristics**

Explanations of characteristics:

The characteristic M_{max} describes the maximum possible short-time torque at corresponding speed. It is important for dynamic processes.

The characteristic M_n indicates the thermally permissible rated torque.

The characteristics are limited by the respective maximum permissible speed n_{max} (for n_{max} refer to the "Technical data" table).

LSN-074-0115-30-320

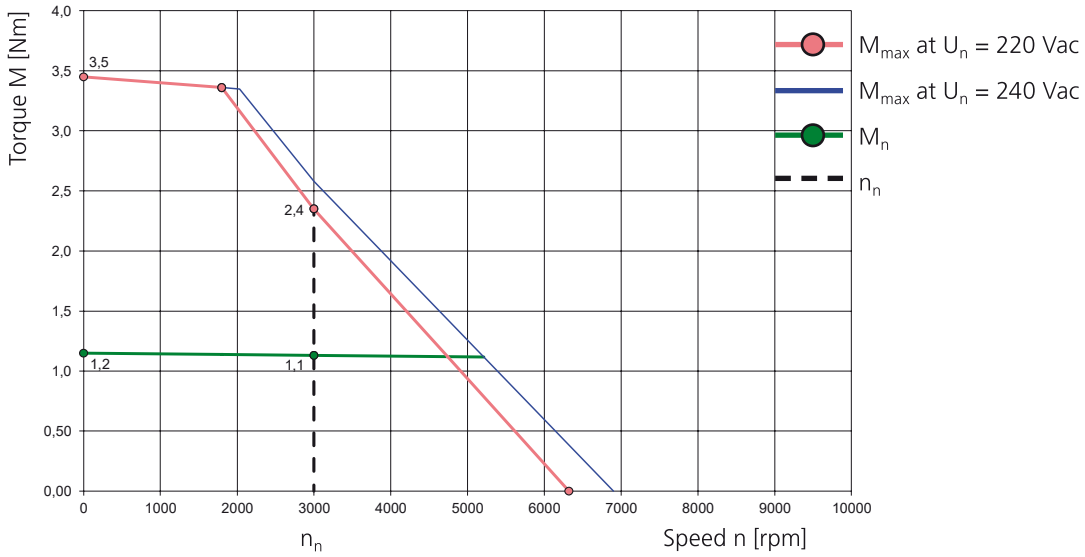

LSN-074-0205-30-320

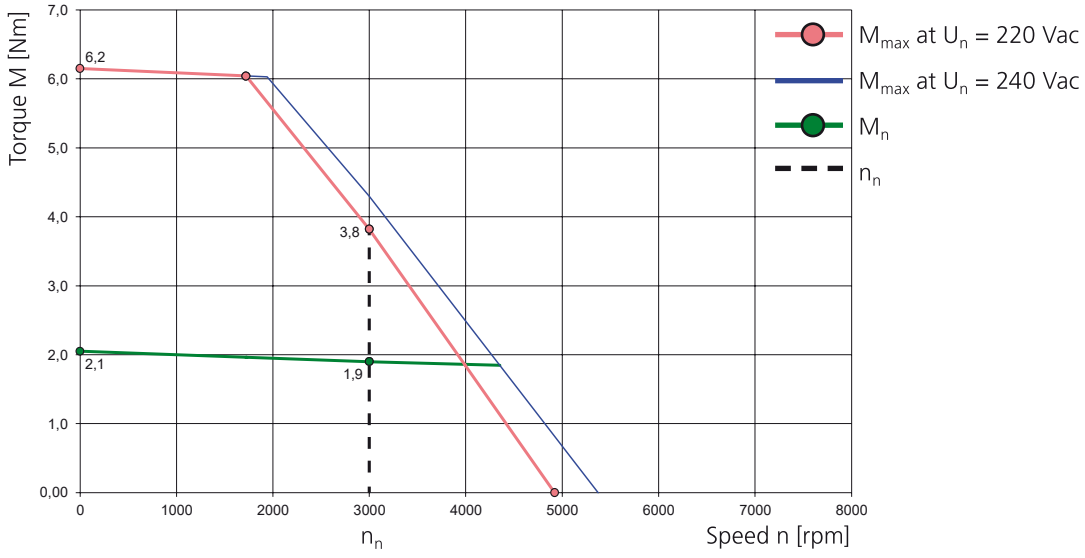

Order Catalogue: Servomotors
ID no.: 0814.258.6-00 Date: 02/2013

LSN-074-0350-30-320

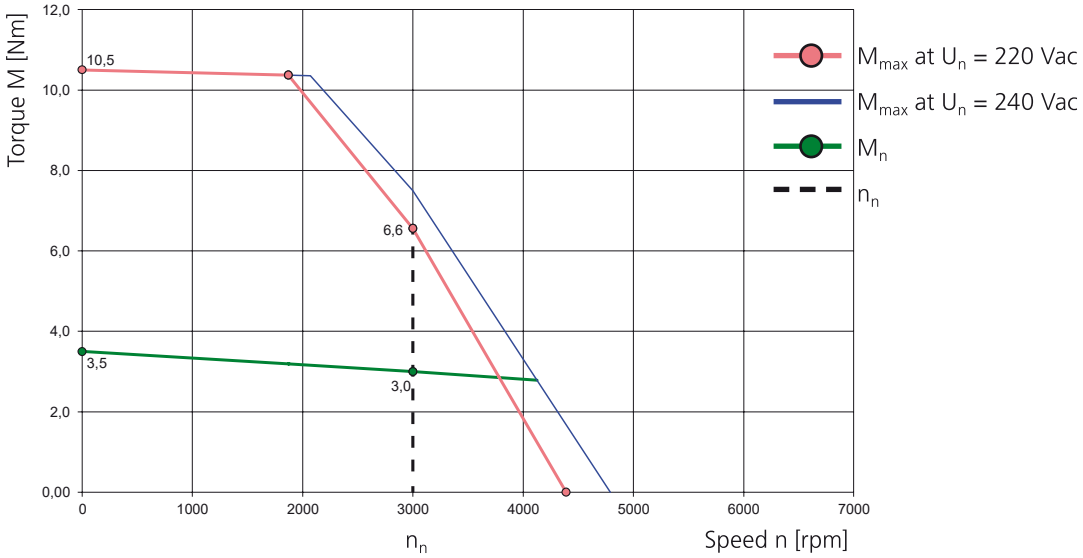

LSN-074-0480-30-320

