PERFORMANCE MADE SMARTER



Valve controller

2224

- Front-programmable
- mA, V, and Ω programmable input
- Ramp times, jump values, reversal, chopper frequency, and deadband
- 3-digit LED display shows I-valve % value
- 1 or 2 channels

Advanced features
- Multifunction user interface consisting of three pushbuttons and a 3-digit LED display.
- All parameters are protected against unauthorized changes with a password.

Application
- Control and regulation of single- or double-coil hydraulic and pneumatic proportional valves used for accurate oil flow regulation, linear soft acceleration and deceleration, modulated output signal, and programmable deadband.
- Is highly suitable for joystick regulation of A/B movements.
- Where changes to A and B need to be selected directly or according to the value of an input signal.

Technical characteristics
- During operation the display shows the present output signal as a % of the I valve.
- Programmable current or voltage input for standard signals acc. to order schedule, joystick / potentiometer or a special non-programmable input.
- Digital inputs for external control functions.
- A pulsating current output prevents the connected valve from sticking.
- Optional programming of the modulation frequency (PWM) between 8 and 400 Hz.
- Multiple adjustable parameters such as output currents, ramp times, jump values, chopper frequency, reversal, deadband, and ON/OFF functions.
- Mounting for a standard 11-pole socket which can be adapted for DIN rail or plate use with PR's 7023 adaptor and 7024 mounting keying.

Applications

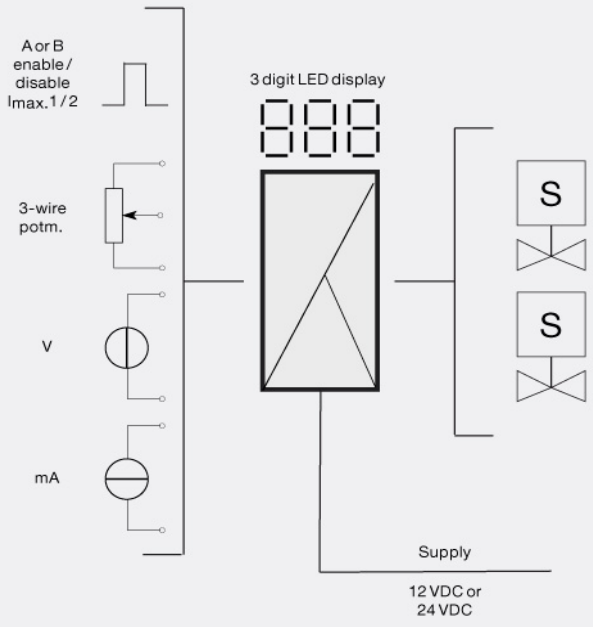

This page is automatically generated on the basis of information provided on www.prelectronics.com and affiliated websites. It is provided to you as a service and for information purpose only. While we have attempted to maintain the information as accurately as possible, the page may contain errors or omissions for which we disclaim any and all liability

Order:

Type	Input		Supply		Option	
2224	0...20 mA	: A	12 V	: 1	Single valve (A)	: A
	4...20 mA	: B	24 V	: 2	Double valve (A/B)	: B
	0...1 V	: C				
	0.2...1 V	: D				
	0...10 V	: E				
	2...10 V	: F				
	±10 V potentiometer	: G				
	0...10 V potentiometer	: H				

Environmental Conditions

Operating temperature..... -20°C to +60°C
Relative humidity..... < 95% RH (non-cond.)
Protection degree..... IP50

Mechanical specifications

Dimensions (HxWxD)..... 80.5 x 35.5 x 84.5 mm (D is without pins)
Weight approx..... 130 g

Common specifications

Supply

Supply voltage (nom. 12 V / 24 V)..... 9.6...28.8 VDC
Internal power dissipation..... 2 W / 24 V
Internal power dissipation..... 1,8 W / 12 V
Programming..... Front-programmable
Updating time..... 30 ms
Temperature coefficient..... 0.01%/°C
Accuracy..... Better than 0.2% of selected range
Linearity error..... 0.2%
EMC immunity influence..... < 2% of span

Input specifications

Current input

Measurement range..... 0...20 mA
Measurement range..... 4...20 mA
Input resistance..... 50 Ω + PTC (54 Ω)

Voltage input

Measurement range..... 0/0.2...1 V and 0/2...10 V
Input resistance..... 10 MΩ

Potentiometer input

Potentiometer min....max..... 0...10 V or ±10 V / 10 kΩ
Operation / shutdown..... PNP / 2.2 kΩ, 12 / 24 V
Imax.1 & Imax.2..... PNP / 2.2 kΩ, 12 / 24 V
A / B channel..... PNP / 2.2 kΩ, 12 / 24 V
Deadband..... 0...99.9% of input span

Output specifications

Output voltage..... Supply voltage-0.5 V (max.)
Output current..... 3000 mA mean
Current peak..... 7 A
Reference voltage..... 10 VDC (A valve)
Reference voltage..... ±10 VDC (A & B valve)
Ramp up & down..... Time 0...10.0 s
PWM frequency..... 8...400 Hz in steps of 1 Hz
of span..... = of the presently selected range

Observed authority requirements

EMC..... 2014/30/EU
RoHS..... 2011/65/EU
EAC..... TR-CU 020/2011