ATX™ Linmaster™ LED Zone 2 Series Nonmetallic Luminaires

Standard or with Emergency Battery Backup

Increased Safety

ATEX/IECEx: Zones 2 – 21 and 22

Applications

- For use in locations where:
  - — Hazardous areas are designated as Zone 2, 21 and 22
  - — A high degree of corrosion resistance is required
  - — Protection against dirt, water and moisture is necessary
- Typical applications include:
  - — Oil refineries
  - — Petrochemical facilities
  - — Food processing plants
  - — Waste and water treatment plants
  - — Underground tunnels
  - — General manufacturing facilities
  - — Hydrogen and Biofuels plants
  - — LNG (Liquid Natural Gas) plants

Features

- Available in 5000K, 4000K, 3000K and 2200K Color Temperatures.
- Luminaire with optional green color LEDs is available.
- Easy to retrofit in same mounting footprint as the Appleton FN Series nonmetallic fluorescent luminaires and FNLED Series non-metallic LED luminaires, and nonmetallic fluorescent luminaires from different manufacturers.
- Full range of lumen outputs, with light distribution equivalent to the Appleton FN Series fluorescent luminaires and FNLED Series non-metallic LED luminaires.
- 0-10V dimming capable.
- To prevent deep discharge of the batteries, emergency luminaires can be ordered and shipped without batteries, then batteries can be ordered and shipped separately prior to installation in the field when needed.
- Corrosion-resistant fiberglass reinforced polyester body and hinged polycarbonate dome cover.
- Retention point integrated in the luminaire's housing for safety cable installation.
- High impact resistance housing (20 Joules – IK10) from -40 °C to +65 °C (-40 °F to +149 °F) ambient temperature and wind profile for use in extreme offshore and onshore environments.
- L70:

+25 °C (+77 °F) Ambient Temperature	Reported	> 102,000 hours
	Calculated	> 200,000 hours
+65 °C (+149 °F) Ambient Temperature	Reported	> 102,000 hours
	Calculated	> 200,000 hours

- Lightweight design, hinged cover with central lock system, and terminal block wiring for easy installation and maintenance.
- Contemporary, low profile design suitable for tight spaces.
- Standard screw-type terminal block can accept 1.5 to 6 mm² wire.
- Field replaceable LED driver.
- Industry-leading thermal management for safe, reliable operation over wide temperature range.
- Universal, high efficiency drivers in standard luminaire models, cover voltage requirements for 100 to 277 Vac, 50/60 Hz for standard and emergency models. Optional DC voltages: 125-300 Vdc or 24-48 Vdc are available with the standard luminaire models.
- High power factor electronic driver (>0.95).
- Standard 6 kV surge suppression.
- Appleton emergency exit labels can safely be secured on the polycarbonate dome cover.



LNLED3 | LNLED4



LNLED5 | LNLED6 | LNLED7

- M20 plug or M25 plug provided.
- Latch assembly and elastomer gasket seals against water and dust ingress.
- Easily accessed for maintenance using Allen key or straight blade screwdriver.
- Central opening with unique patented release system to prevent damage.
- Can be horizontally or vertically mounted.
- Available in 1.5 H or 3 H emergency version, including built-in monthly self- test. Test results through multi-colored LED.
- Optional positive safety switch disconnects power to LED's and driver to allow maintenance in hazardous locations.

Warranty ✪

- 10 year standard warranty.

Options

- Emergency/Battery Back-Up available for all models;
  - — Add suffix -H to the end of the catalog number for 90 minutes. Example: LNLED5CBUSADH
  - — Add suffix -E to the end of the catalog number for 180 minutes. Example: LNLED5CBUSADE

Standard Materials

- Housing: fiberglass reinforced polyester
- Dome cover: polycarbonate
- Gasket: elastomer
- Mounting accessories available in different materials such as gray painted aluminum, zinc plated steel, galvanized steel or 316 stainless steel

ATEX/IECEx Certifications and Compliances

- Certification Type: LNLED
  - — Gas: Zone 2
    - – Conforming to ATEX 2014/34/EU: II 3 G
    - – Type of Protection: Ex ec IIC Gc
    - – Temperature Class: T5 to T3
  - — Dust: Zone 21 and 22
    - – Conforming to ATEX 2014/34/EU: II 3 D
    - – Type of Protection: Ex tc IIIC Dc
- Ambient Temperature:
  - — Standard Luminaire Ambient Temperature: -40 °C up to +65 °C (-40 °F up to +149 °F) , refer to temperature codes table.
  - — Emergency Luminaire Ambient Temperature: -20 °C up to +60 °C (-4 °F up to +140 °F)

✪ *For warranty details go to www.appleton.emerson.com.*

ATX™ Linmaster™ LED Zone 2 Series Nonmetallic Luminaires

Standard or with Emergency Battery Backup

Increased Safety

ATEX/IECEx: Zones 2 – 21 and 22

- ATEX Certificate:
  - — For II 2 D : INERIS 24ATEX0002X
  - — For II 3 G : INERIS 24ATEX3001X
- IECEx Certificate: IECEx INE 24.0002X
- Index of Protection according EN/IEC 60529: IP66 / 67 / 68.
  - — IPX8 testing was conducted at 1.5 m water depth for a duration of 45 min.
- Impact Resistance (shock): IK10
- Photobiological Safety, IEC 62778 and IEC 62471: RG0

Related Products

- ATX™ Linmaster™ LED Zone 1 Series Nonmetallic Luminaires
- ATX™ FELED Series Nonmetallic LED Luminaires

Order Using Catalog Numbering Guide — ATX™ Linmaster Zone 2 Series Nonmetallic LED Luminaires

LNLED	3	C	BU	S	A	D	W	E	F
Series Prefix: LNLED - Zone 2, 21, 22 ATEX/IECEx Certified	Lumen Output ①: 3 - 3K 4 - 4K 5 - 5K 6 - 6K 7 - 7K	Color Temperature (CCT): C - 5000K (Cool) N - 4000K (Neutral) W - 3000K (Warm) H - 2200K V - Green	Voltage: BU - 100 to 277 Vac, 50/60 Hz; 125-300 Vdc B2 - 24-48 Vdc ②	Wiring Version: S - Surface/Suspension Mount Standard Wiring (single phase) L - Surface/Suspension Mount Dual Loop In/Out Through Wiring (single phase)	Cable Entry: A - Armored M20 ③ U - Unarmored M20 ④ N - Unarmored M25 ④ R - Armored M25 ③	Optic: Blank - Clear D - Diffused	Battery Pack: Blank - Emergency Luminaire with Battery Pack W - Emergency Luminaire without Battery Pack	Emergency: Blank - No Emergency R- 90 minutes (non-maintained) H - 90 minutes (maintained) E - 180 minutes (maintained)	Cutoff Switch: Blank - No switch F - With cutoff switch ⑤

① All values displayed reflect typical values (+/- 10%).

② DC voltages can only be used with IECEx certified standard luminaires. Not available with ATEX certification.

③ Must order armored cable glands separately.

④ Cable glands provided in luminaires with unarmored hub entries.

⑤ Select to have cutoff switch with standard or emergency model.

ATX™ Linmaster™ LED Zone 2 Series Nonmetallic Luminaires

Standard or with Emergency Battery Backup

Increased Safety

ATEX/IECEx: Zones 2 – 21 and 22

Lumen Output (Efficacy) ①

Model	Fluorescent Equivalency	Light Distribution Pattern	CCT (Correlated Color Temperature)	CRI (Color Rendering Index)	Lumen Output	Efficacy (lm/W)	CCT	CRI	Lumen Output	Efficacy (lm/W)	CCT	CRI	Lumen Output	Efficacy (lm/W)
Clear Cover — Standard Mode														
LNLED3	3 x 18W	Linear	3000K	≥80	3629	140	4000K	≥80	3835	148	5000K	≥80	3881	150
LNLED4	2 x 36W	Linear	3000K	≥80	4189	139	4000K	≥80	4427	147	5000K	≥80	4480	148
LELED5	3 x 36W	Linear	3000K	≥80	5990	147	4000K	≥80	6330	155	5000K	≥80	6407	157
LNLED6	2 x 58W	Linear	3000K	≥80	7143	145	4000K	≥80	7548	153	5000K	≥80	7640	155
LNLED7	3 x 58W	Linear	3000K	≥80	7933	145	4000K	≥80	8383	153	5000K	≥80	8485	155
Clear Cover — Emergency Model | 90 Minutes														
LNLED3*H	3 x 18W	Linear	3000K	≥80	3629 | 1284	115	4000K	≥80	3835 | 1356	122	5000K	≥80	3881 | 1373	123
LNLED4*H	2 x 36W	Linear	3000K	≥80	4189 | 1284	115	4000K	≥80	4427 | 1356	121	5000K	≥80	4480 | 1373	123
LNLED5*H	3 x 36W	Linear	3000K	≥80	5990 | 1313	130	4000K	≥80	6330 | 1388	137	5000K	≥80	6407 | 1405	139
LNLED6*H	2 x 58W	Linear	3000K	≥80	7143 | 1313	131	4000K	≥80	7458 | 1388	138	5000K	≥80	7640 | 1405	140
LNLED7*H	3 x 58W	Linear	3000K	≥80	7933 | 1313	132	4000K	≥80	8383 | 1388	139	5000K	≥80	8485 | 1405	141
Clear Cover — Emergency Model | 180 Minutes														
LNLED3*E	3 x 18W	Linear	3000K	≥80	3629 | 759	115	4000K	≥80	3835 | 802	122	5000K	≥80	3881 | 812	123
LNLED4*E	2 x 36W	Linear	3000K	≥80	4189 | 759	115	4000K	≥80	4427 | 802	121	5000K	≥80	4480 | 812	123
LNLED5*E	3 x 36W	Linear	3000K	≥80	5990 | 771	130	4000K	≥80	6330 | 814	137	5000K	≥80	6407 | 824	139
LNLED6*E	2 x 58W	Linear	3000K	≥80	7143 | 771	131	4000K	≥80	7458 | 814	138	5000K	≥80	7640 | 824	140
LNLED7*E	3 x 58W	Linear	3000K	≥80	7933 | 771	132	4000K	≥80	8383 | 814	139	5000K	≥80	8485 | 824	141
Diffused Cover — Standard Model														
LNLED3	3 x 18W	Linear	3000K	≥80	3302	128	4000K	≥80	3425	133	5000K	≥80	3504	134
LNLED4	2 x 36W	Linear	3000K	≥80	3812	126	4000K	≥80	3953	131	5000K	≥80	4045	134
LNLED5	3 x 36W	Linear	3000K	≥80	5419	133	4000K	≥80	5620	138	5000K	≥80	5751	141
LNLED6	2 x 58W	Linear	3000K	≥80	6462	131	4000K	≥80	6702	136	5000K	≥80	6857	139
LNLED7	3 x 58W	Linear	3000K	≥80	7177	131	4000K	≥80	7443	136	5000K	≥80	7616	139
Diffused Cover — Emergency Model | 90 Minutes														
LNLED3*H	3 x 18W	Linear	3000K	≥80	3302 | 1191	105	4000K	≥80	3423 | 1235	108	5000K	≥80	3502 | 1264	111
LNLED4*H	2 x 36W	Linear	3000K	≥80	3812 | 1191	104	4000K	≥80	3953 | 1235	108	5000K	≥80	4045 | 1264	111
LNLED5*H	3 x 36W	Linear	3000K	≥80	5436 | 1219	118	4000K	≥80	5638 | 1265	122	5000K	≥80	5769 | 1294	125
LNLED6*H	2 x 58W	Linear	3000K	≥80	6462 | 1219	118	4000K	≥80	6702 | 1265	122	5000K	≥80	6857 | 1294	125
LNLED7*H	3 x 58W	Linear	3000K	≥80	6453 | 1219	119	4000K	≥80	7443 | 1265	123	5000K	≥80	7616 | 1294	126
Diffused Cover — Emergency Model | 180 Minutes														
LNLED3*E	3 x 18W	Linear	3000K	≥80	3302 | 702	105	4000K	≥80	3423 | 728	108	5000K	≥80	3502 | 745	111
LNLED4*E	2 x 36W	Linear	3000K	≥80	3812 | 702	104	4000K	≥80	3953 | 728	108	5000K	≥80	4045 | 745	111
LNLED5*E	3 x 36W	Linear	3000K	≥80	5436 | 710	118	4000K	≥80	5638 | 736	122	5000K	≥80	5769 | 753	125
LNLED6*E	2 x 58W	Linear	3000K	≥80	6462 | 710	118	4000K	≥80	6702 | 736	122	5000K	≥80	6857 | 753	125
LNLED7*E	3 x 58W	Linear	3000K	≥80	6453 | 710	119	4000K	≥80	7443 | 736	123	5000K	≥80	7616 | 753	126

① All values are typical (+/- 10%).

Visit our website at **www.masteringled.com**.
Contact us at **(800) 621-1506** or **+33 3 22 54 13 90**. | © June 2024

ATX™ Linmaster™ LED Zone 2 Series Nonmetallic Luminaires

Standard or with Emergency Battery Backup

Increased Safety

ATEX/IECEx: Zones 2 – 21 and 22

Electrical Specifications — AC Driver at 230 Vac ①

Model	Voltage	Input Power (Watt)	Input Current (A)	Power Factor (PF)	Total Harmonic Distortion (THD)
Standard Model					
LNLED3	230 Vac	26	0.118	>0.9	<20%
LNLED4	230 Vac	30	0.136	>0.9	<20%
LNLED5	230 Vac	41	0.186	>0.9	<20%
LNLED6	230 Vac	49	0.225	>0.9	<20%
LNLED7	230 Vac	55	0.251	>0.9	<20%
Emergency Model | 90 Minutes					
LNLED3*E	230 Vac	32	0.160	>0.8	<20%
LNLED4*E	230 Vac	37	0.179	>0.8	<20%
LNLED5*E	230 Vac	46	0.220	>0.9	<20%
LNLED6*E	230 Vac	55	0.257	>0.9	<20%
LNLED7*E	230 Vac	60	0.283	>0.9	<20%
Emergency Model | 180 Minutes					
LNLED3*H	230 Vac	32	0.160	>0.8	<20%
LNLED4*H	230 Vac	37	0.179	>0.8	<20%
LNLED5*H	230 Vac	46	0.220	>0.9	<20%
LNLED6*H	230 Vac	55	0.257	>0.9	<20%
LNLED7*H	230 Vac	60	0.283	>0.9	<20%

Electrical Specifications — DC Driver at 24 Vdc ①

Model	Voltage	Input Power (Watt)	Input Current (A)	Power Factor (PF)	Total Harmonic Distortion (THD)
LNLED3	24 Vdc	24	1.0	N/A	N/A
LNLED4	24 Vdc	27	1.1	N/A	N/A
LNLED5	24 Vdc	43	1.8	N/A	N/A
LNLED6	24 Vdc	50	2.1	N/A	N/A
LNLED7	24 Vdc	57	2.4	N/A	N/A

① All values are typical (tolerance +/-10%). Same electrical ratings apply to each luminaire with different LED position, mounting versions and cable entries.

ATX™ Linmaster™ LED Zone 2 Series Nonmetallic Luminaires

Standard or with Emergency Battery Backup

Increased Safety

ATEX/IECEx: Zones 2 – 21 and 22

Temperature Codes — Gas

	Gas — T Rating				
Model Type	**Ta = +40 °C (+104 °F)**	**Ta = +50 °C (+122 °F)**	**Ta = +55 °C (+131 °F)**	**Ta = +60 °C (+140 °F)**	**Ta = +65 °C (+149 °F)**
LNLED3	T6	T5	T5	T4	T4
LNLED4	T5	T4	T4	T4	—
LNLED5	T6	T5	T5	T5	T4
LNLED6	T6	T5	T5	T4	—
LNLED7	T5	T4	T4	T4	—

Temperature Codes — Dust

	Dust — Surface T°				
Model Type	**Ta = +40 °C (+104 °F)**	**Ta = +50 °C (+122 °F)**	**Ta = +55 °C (+131 °F)**	**Ta = +60 °C (+140 °F)**	**Ta = +65 °C (+149 °F)**
LNLED3	+54 °C (+129 °F)	+64 °C (+147 °F)	+69 °C (+156 °F)	+74 °C (+165 °F)	+79 °C (+174 °F)
LNLED4	+55 °C (+131°F)	+65 °C (+149 °F)	+70 °C (+158 °F)	+75 °C (+167 °F)	—
LNLED5	+53 °C (+127 °F)	+63 °C (+145 °F)	+68 °C (+154 °F)	+73 °C (+163 °F)	+78 °C (+172 °F)
LNLED6	+54 °C (+129 °F)	+64 °C (+147 °F)	+69 °C (+156 °F)	+74 °C (+165 °F)	—
LNLED7	+56 °C (+133 °F)	+66 °C (+151 °F)	+71 °C (+160 °F)	+76 °C (+169 °F)	—

"T" Numbers Represent the Maximum Temperature

"T" #	**T1**	**T2**	**T3**	**T4**	**T5**	**T6**
Temp. Range °C (°F)	+301 to +450 (+547 to +842)	+201 to +300 (+394 to +572)	+136 to +200 (+277 to +392)	+101 to +135 (+214 to +275)	+86 to +100 (+187 to +212)	+85 (+185)

① *Above temperature code tables are related to standard luminaires with AC driver only. To see the temperature codes for emergency luminaire or for standard luminaire with DC driver, refer to the instruction manual.*

ATX™ Linmaster™ LED Zone 2 Series Nonmetallic Luminaires

Standard or with Emergency Battery Backup

Increased Safety

ATEX/IECEx: Zones 2 – 21 and 22

Wiring Diagrams

Version: S

Standard Model

Standard (Single Phase), 3 Entries, 1 at one end and 2 at the other

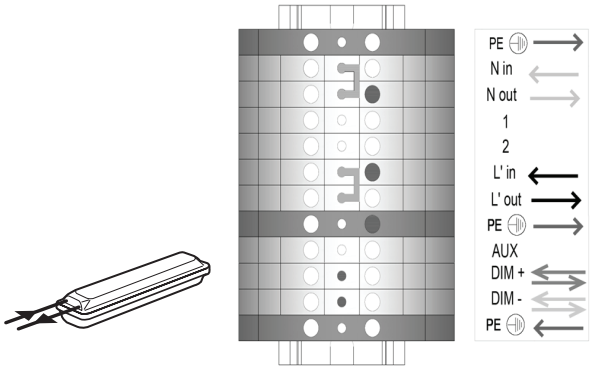

Emergency Model

Standard (Single Phase), 3 Entries, 1 at one end and 2 at the other

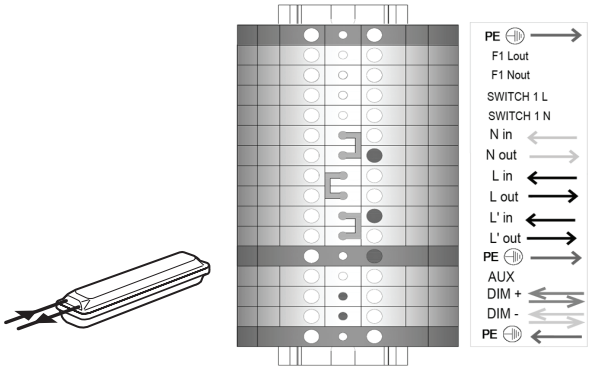

Version : L

Standard Model

Dual Loop In / Out — Through Wiring (Single Phase), 3 Entries, 1 at one end and 2 at the other

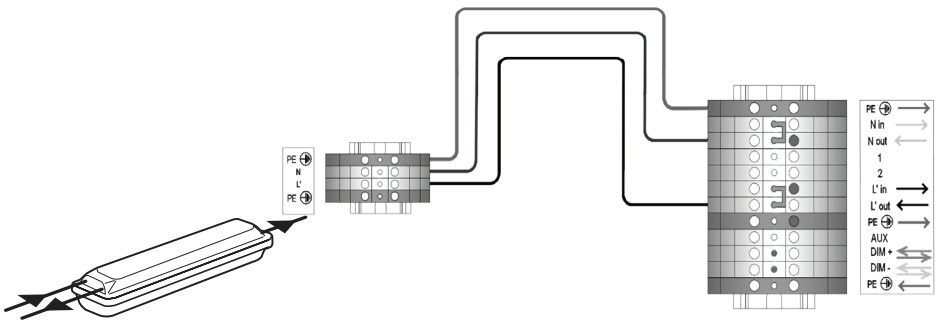

Emergency Model

Dual Loop In / Out — Through Wiring (Single Phase), 3 Entries, 1 at one end and 2 at the other

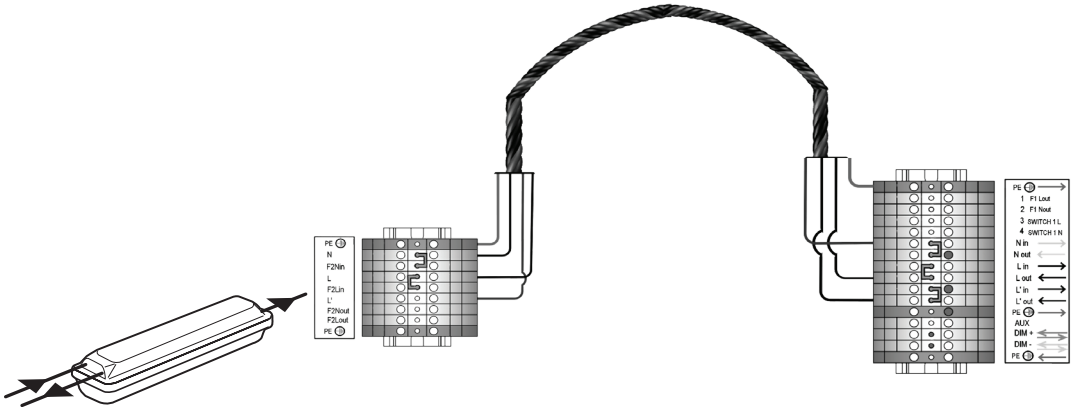

ATX™ Linmaster™ LED Zone 2 Series Nonmetallic Luminaires

Standard or with Emergency Battery Backup

Increased Safety

ATEX/IECEx: Zones 2 – 21 and 22

Maintained Emergency Linmaster

Wiring Diagram

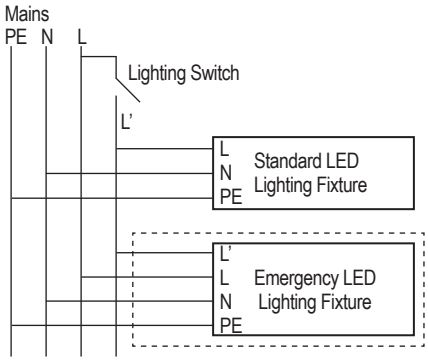

Non-Maintained Emergency Linmaster

Wiring Diagram

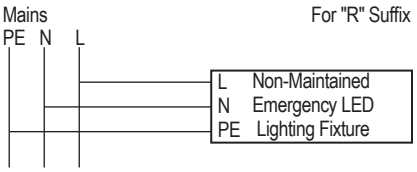

Emergency Function Diagram - Maintained

Mains	Lighting Switch Closed	Lighting Switch Open
ON	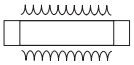	
OFF	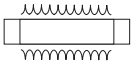	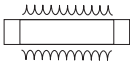

Emergency Function Diagram - Non-Maintained

Mains	Light Illumination
ON	
OFF	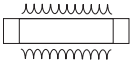

LED Signals

Indicator Color	Timing	Function
Green	1 sec ON: 1 sec OFF	Normal charging ok, Battery not yet fully charged, No fault detected, Testing ok
Green	0.25 sec ON: 0.25 sec OFF	Functional / Duration Self-Test on-going
Green	Steady ON	Charging ok, Battery fully charged, No fault detected, Testing ok
Red	1 sec ON: 1 sec OFF	Fault condition, Installation issue, Battery is reverse, not connected, or shorted. Functional test failure, full duration test failure
LED Indicators OFF, LED Array ON	LED Indicators (Red and Green) OFF	No AC, Emergency mode ON

Automatic Testing System (ATS) — Emergency Battery Backup Model — Functionality

At the completion of functional and full duration tests, and when AC power is present, LED indicators will display status of the emergency luminaire.

Functional Test	Full Duration Test
Starts within 24-48 hours after the initial power up of the luminaire	Starts within 5 to 26 days after the initial power up of the module
Occurs every 14 days after the initial aforementioned functional test	Occurs once every 364 days after the initial duration test
Lasts for 30 seconds	Lasts for full duration of the rated emergency period
At the completion of functional and full duration tests, LED indicator will display the status of the emergency luminaire when AC is present	

Emergency Light Duration

Lumen Level	Battery Capacity	Duration	Light Output	Duration	Light Output
3K (LNLED3)			5000K CCT: 741 lumens		5000K CCT: 1278 lumens
4K (LNLED4)			5000K CCT: 741 lumens		5000K CCT: 1278 lumens
5K (LNLED5)	6 Ah – 6 V	180 minutes	5000K CCT: 758 lumens	90 minutes	5000K CCT: 1482 lumens
6K (LNLED6)			5000K CCT: 758 lumens		5000K CCT: 1482 lumens
7K (LNLED7)			5000K CCT: 758 lumens		5000K CCT: 1482 lumens

ATX™ Linmaster™ LED Zone 2 Series Nonmetallic Luminaires

Standard or with Emergency Battery Backup

Increased Safety

ATEX/IECEx: Zones 2 – 21 and 22

Accessories and Replacement Parts

	Description	Weight in kg (lbs)	Catalog Number
Replacement Dome Cover			
	Diffused dome cover with gasket for 2ft Linmaster	0.8 (1.76)	**LINDCVR2**
	Diffused dome cover with gasket for 4ft Linmaster	1.4 (3.09)	**LINDCVR4**
	Clear dome cover with gasket for 2ft Linmaster	0.8 (1.76)	**LINCCVR2**
	Clear dome cover with gasket for 4ft Linmaster	1.4 (3.09)	**LINCCVR4**
Replacement Battery Pack and BMM			
	Replacement Battery pack (1 each)	0.73 (1.6)	**BPLLED**
	Replacement BMM (1 each)	0.65 (1.43)	**BMMLLED** ①
Replacement Fuse Assembly			
	Replacement fuse assembly (1 each)	0.02 (0.04)	**APPFUSEZ1**
Safety Cable			
	Stainless Steel	0.2 (0.4)	**LEDSC**
Fixing Brackets for Surface Installation — Set of Two			
	Zinc plated steel	0.39 (0.85)	**FEFBZ**
Brackets for Surface Mounting — Set of Two			
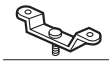	316 stainless steel	0.64 (1.4)	**FESBS**
Hinged Brackets for Adjusting Luminaire			
	Aluminum	0.75 (1.7)	**FEHBA**
	316 stainless steel	0.57 (1.25)	**FEHBS**
M8 Ring Bolts — Set of Two			
	Zinc plated steel	0.11 (0.2)	**FERBM8Z**
Half Clamps Brackets for Pole Mounting — Set of two			
	Diameter for 1-1/4" to 1-1/2" pole: 42 mm to 49 mm (1.65" to 1.93")		
	• Zinc plated steel	0.34 (0.7)	**FEHC49Z**
	• 316 stainless steel	0.34 (0.7)	**FEHC49S**
	Diameter for 2" pole: 60 mm (2.3")		
	• Zinc plated steel	0.48 (1.1)	**FEHC60Z**
	• 316 stainless steel	0.52 (1.2)	**FEHC60S**
Linmaster mounting bracket			
	For 800 mm mounting dimension	0.75 (1.7)	**LNMB800**
Fall Prevention Kit — Safety chain retains fixture temporarily to ease installation			
	For M25 cable entry	0.76 (1.7)	**FESCM25**
	For M20 cable entry	0.76 (1.7)	**FESCM20**

	Description	Size in Millimeters (Inches)	Catalog Number
	Warning label, straight arrow — Adhesive and divisible	327 x 109 (12.87 x 4.29)	**BAESLABEL200** ②
	Warning label, inclined arrow — Adhesive and divisible	327 x 109 (12.87 x 4.29)	**BAESLABEL201** ②

① *Not CE Marked.*

② *Exit labels for use with only 3000lm model, BU driver and clear cover option.*

ATX™ Linmaster™ LED Zone 2 Series Nonmetallic Luminaires

Standard or with Emergency Battery Backup

Increased Safety

ATEX/IECEx: Zones 2 – 21 and 22

Replacement Drivers

Description	Weight in kg (lbs)	Catalog Number
LNLED3CBU*, LNLED3NBU*, LNLED3WBU* Replacement Driver (1 each)	0.95 (2.09)	**APMZ050L135UD48**
LNLED4CBU*, LNLED4NBU*, LNLED4WBU* Replacement Driver (1 each)	0.95 (2.09)	**APMZ050L135UD56**
LNLED5CBU*, LNLED5NBU*, LNLED5WBU* Replacement Driver (1 each)	0.95 (2.09)	**APMZ050L135UD84**
LNLED6CBU*, LNLED6NBU*, LNLED6WBU* Replacement Driver (1 each)	0.95 (2.09)	**APMZ050L135UD96**
LNLED7CBU*, LNLED7NBU*, LNLED7WBU* Replacement Driver (1 each)	0.95 (2.09)	**APMZ050L135UD10**
LNLED3HBU* Replacement Driver (1 each)	0.95 (2.09)	**APMZ050L135UD42**
LNLED4HBU* Replacement Driver (1 each)	0.95 (2.09)	**APMZ050L135UD46**
LNLED5HBU* Replacement Driver (1 each)	0.95 (2.09)	**APMZ050L135UD89**
LNLED6HBU* Replacement Driver (1 each)	0.95 (2.09)	**APMZ050L135UD92**
LNLED7HBU* Replacement Driver (1 each)	0.95 (2.09)	**APMZ050L135UD95**
LNLED3VBU* Replacement Driver (1 each)	0.95 (2.09)	**APMZ050L135UD3**
LNLED4VBU* Replacement Driver (1 each)	0.95 (2.09)	**APMZ050L135UD30**
LNLED5VBU* Replacement Driver (1 each)	0.95 (2.09)	**APMZ050L135UD31**
LNLED6VBU* Replacement Driver (1 each)	0.95 (2.09)	**APMZ050L135UD3A**
LNLED7VBU* Replacement Driver (1 each)	0.95 (2.09)	**APMZ050L135UD32**
LNLED3CB2*, LNLED3NB2*, LNLED3WB2* Replacement Driver (1 each)	0.95 (2.09)	**APMZ050C130DC48**
LNLED4CB2*, LNLED4NB2*, LNLED4WB2* Replacement Driver (1 each)	0.95 (2.09)	**APMZ050C130DC56**
LNLED5CB2*, LNLED5NB2*, LNLED5WB2* Replacement Driver (1 each)	0.95 (2.09)	**APMZ050C130DC84**
LNLED6CB2*, LNLED6NB2*, LNLED6WB2* Replacement Driver (1 each)	0.95 (2.09)	**APMZ050C130DC96**
LNLED7CB2*, LNLED7NB2*, LNLED7WB2* Replacement Driver (1 each)	0.95 (2.09)	**APMZ050C130DC10**
LNLED3HB2* Replacement Driver (1 each)	0.95 (2.09)	**APMZ050C130DC42**
LNLED4HB2* Replacement Driver (1 each)	0.95 (2.09)	**APMZ050C130DC46**
LNLED5HB2* Replacement Driver (1 each)	0.95 (2.09)	**APMZ050C130DC89**
LNLED6HB2* Replacement Driver (1 each)	0.95 (2.09)	**APMZ050C130DC92**
LNLED7HB2* Replacement Driver (1 each)	0.95 (2.09)	**APMZ050C130DC95**
LNLED3VB2* Replacement Driver (1 each)	0.95 (2.09)	**APMZ050C130DC3**
LNLED4VB2* Replacement Driver (1 each)	0.95 (2.09)	**APMZ050C130DC30**
LNLED5VB2* Replacement Driver (1 each)	0.95 (2.09)	**APMZ050C130DC31**
LNLED6VB2* Replacement Driver (1 each)	0.95 (2.09)	**APMZ050C130DC3A**
LNLED7VB2* Replacement Driver (1 each)	0.95 (2.09)	**APMZ050C130DC32**

ATX™ Linmaster™ LED Zone 2 Series Nonmetallic Luminaires

Standard or with Emergency Battery Backup

Increased Safety

ATEX/IECEx: Zones 2 – 21 and 22

Luminaire Dimensions in Millimeters (Inches)

End View

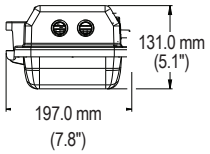

Side View — 0.785 m (2.58 ft)

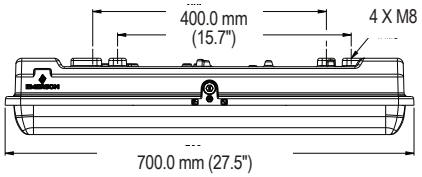

Side View — 1.39 m (4.56 ft) Version

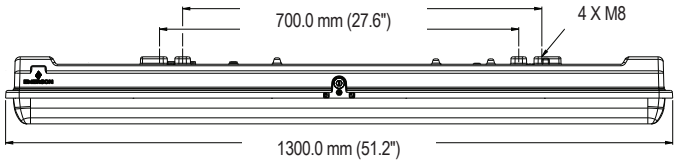

Luminaire Specifications

Model	Length m (ft)	Weight in kg (lb)
Standard Model		
LNLED3 LNLED4	0.79 (2.58)	5.00 (11.00)
LNLED5 LNLED6 LNLED7	1.39 (4.56)	8.00 (17.50)
Emergency Model		
LNLED3 LNLED4	0.79 (2.58)	6.40 (13.10)
LNLED5 LNLED6 LNLED7	1.39 (4.56)	9.00 (19.80)

ATX™ Linmaster™ LED Zone 2 Series Nonmetallic Luminaires

Standard or with Emergency Battery Backup

Increased Safety

ATEX/IECEx: Zones 2 – 21 and 22

Mounting Options Dimensions in Millimeters (Inches)

FEFBZ: zinc plated steel — Set of two quick fixing brackets for ease of surface mounting

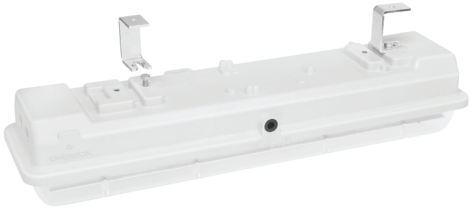

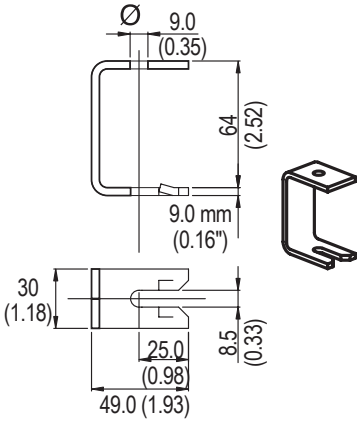

FESBS: 316 stainless steel — Set of two brackets for surface mounting

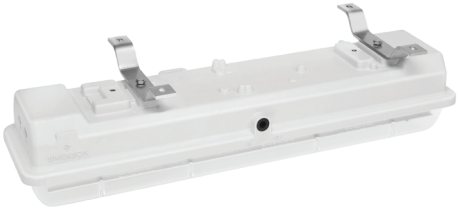

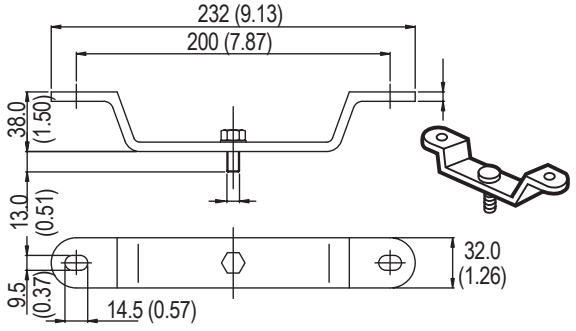

FERBM8Z: zinc plated steel — Set of two ring bolts

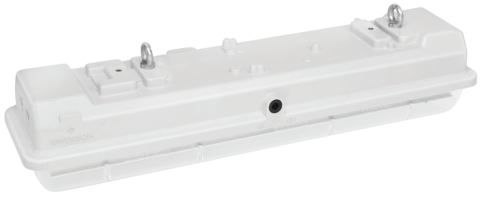

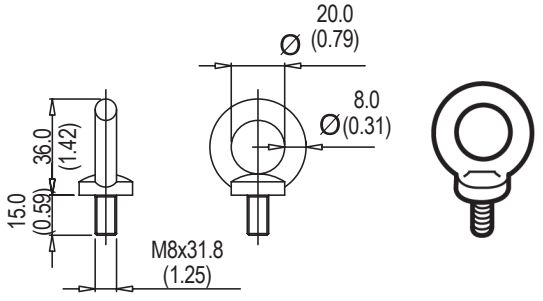

ATX™ Linmaster™ LED Zone 2 Series Nonmetallic Luminaires

Standard or with Emergency Battery Backup

Increased Safety

ATEX/IECEx: Zones 2 – 21 and 22

Mounting Options Dimensions in Millimeters (Inches)

FEHC49Z: zinc plated steel or FEHC49S: 316 stainless steel — Set of two clamps for pole diameter 42 mm to 49 mm (for 1-1/4" to 1-1/2" pole).
FEHC60Z: zinc plated steel or FEHC60S: 316 stainless steel — Set of two clamps for pole diameter 60 mm (for 2" pole).

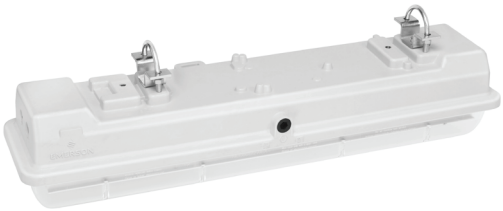

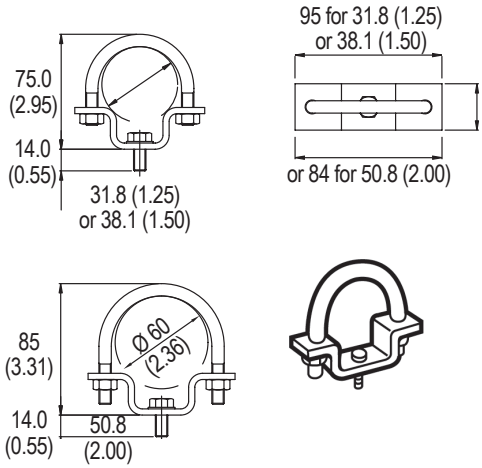

FEHBA: aluminum or FEHBS: 316 stainless steel — Set of two hinged brackets for adjusting luminaire.

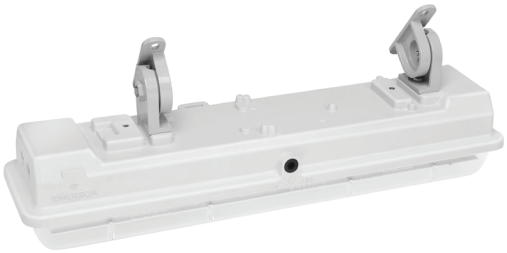

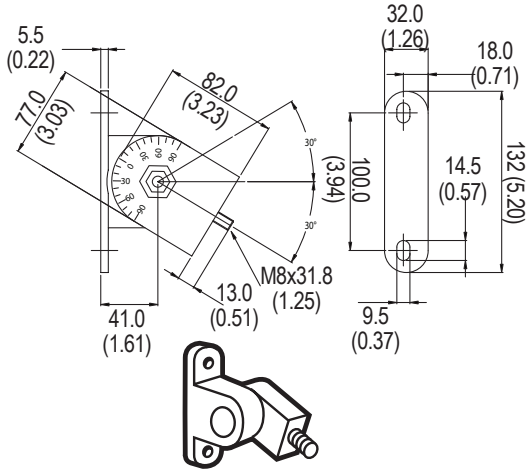

MOUNTING AT 800 mm CD– Only For 1300mm Model

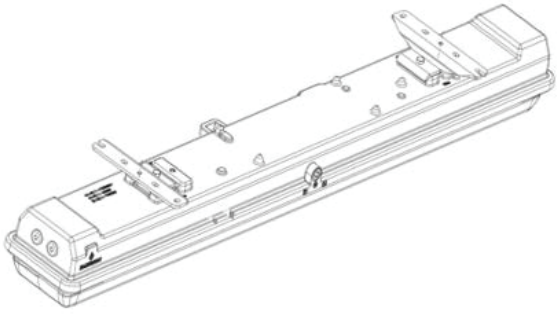

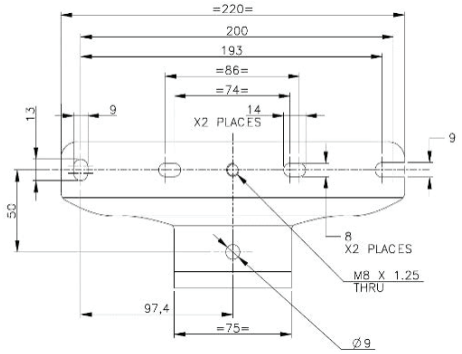

ATX™ Linmaster™ LED Zone 2 Series Nonmetallic Luminaires

Standard or with Emergency Battery Backup

Increased Safety

ATEX/IECEx: Zones 2 – 21 and 22

Photometric Data — DATA SHOWN IS ABSOLUTE

700 mm, Diffused Polycarbonate, 5000K CCT

CATALOG NUMBER: **LNLED3CBU**D**

Luminaire Lumens 3,000

POLAR CANDELA DISTRIBUTION

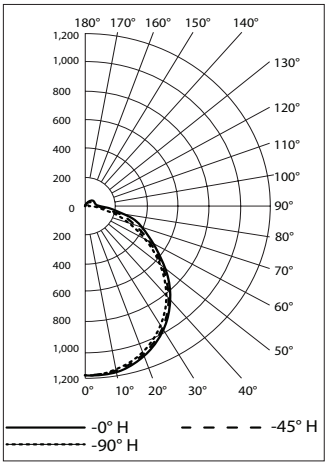

700 mm, Diffused Polycarbonate, 5000K CCT

CATALOG NUMBER: **LNLED4CBU**D**

Luminaire Lumens 4,000

POLAR CANDELA DISTRIBUTION

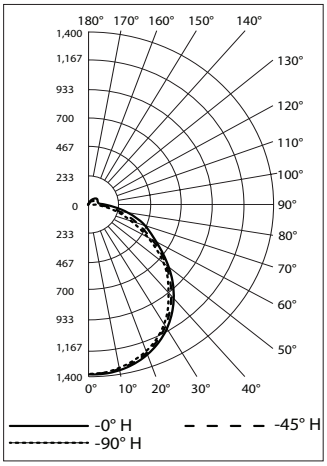

1300 mm, Diffused Polycarbonate, 5000K CCT

CATALOG NUMBER: **LNLED5CBU**D**

Luminaire Lumens 5,000

POLAR CANDELA DISTRIBUTION

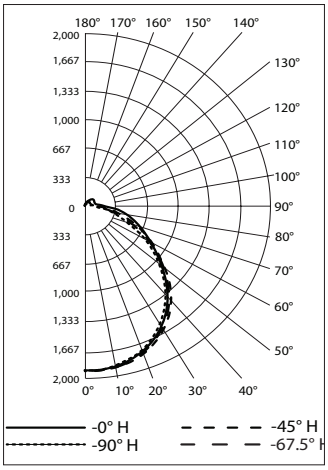

1300 mm, Diffused Polycarbonate, 5000K CCT

CATALOG NUMBER: **LNLED6CBU**D**

Luminaire Lumens 6,000

POLAR CANDELA DISTRIBUTION

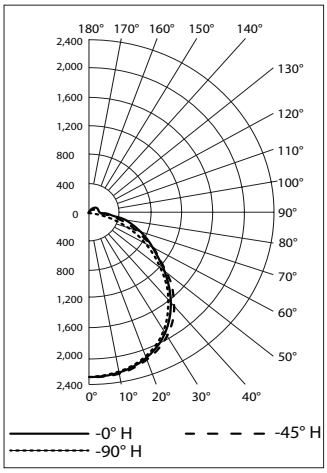

1300 mm, Diffused Polycarbonate, 5000K CCT

CATALOG NUMBER: **LNLED7CBU**D**

Luminaire Lumens 7,000

POLAR CANDELA DISTRIBUTION

