PRODUCT INFORMATION PACKET

Model No: 5KH32GNB812X
Catalog No: HG450
Carbonator Pump Motor, 0.33 HP, 1 Ph, 60 Hz, 220-240 V, 1800 RPM, 48Y Frame, DP



Regal and Marathon are trademarks of Regal Rexnord Corporation or one of its affiliated companies.
Â©2023 Regal Rexnord Corporation, All Rights Reserved. MC017097E

marathon® Motors

Nameplate Specifications

Output HP	0.33 Hp	Output KW	0.25 kW
Frequency	60 Hz	Voltage	220-240 V
Current	2.7-2.7 A	Speed	1725 rpm
Service Factor	1	Phase	1
Efficiency	61.1 %	Power Factor	0
Duty	Continuous	Insulation Class	B
KVA Code	N	Frame	48Y
Enclosure	Drip Proof	Thermal Protection	Automatic
Ambient Temperature	40 °C	Drive End Bearing Size	6203
Opp Drive End Bearing Size	6203	UL	Recognized
CSA	Yes	CE	N
Number of Speeds	1		

Technical Specifications

Electrical Type	Split Phase	Starting Method	SM
Poles	4	Rotation	Counterclockwise/Clockwise
Mounting	Resilient Base	Motor Orientation	ANY
Drive End Bearing	BALL	Opp Drive End Bearing	BALL
Frame Material	Rolled Steel	Overall Length	7.69 in
Frame Length	5.16 in	Shaft Diameter	0.630 in
Shaft Extension	0.17 in		
Connection Drawing	52A105379AA	Outline Drawing	52A113159P1

This is an uncontrolled document once printed or downloaded and is subject to change without notice. Date Created:03/15/2023

52A113159

CONTROL SURFACES & DIMENSIONS
Ⓟ PROC.
Ⓔ ENG.
Ⓐ APPL.
Ⓡ REG.

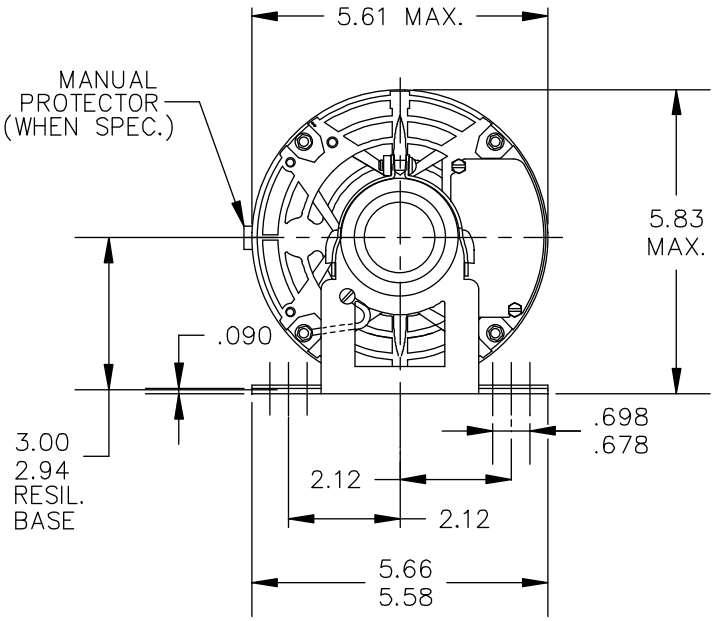

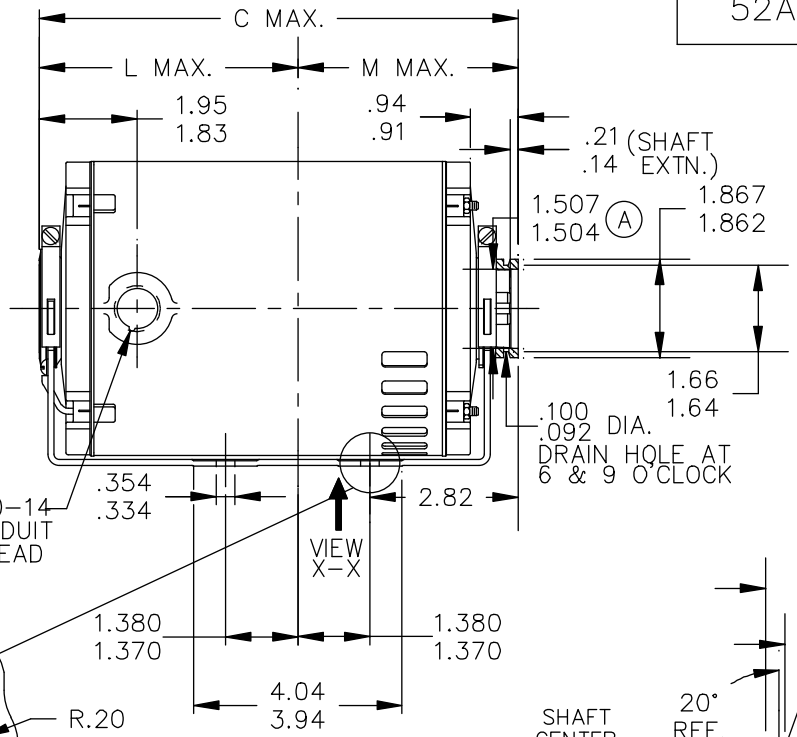

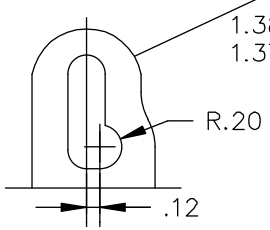

VIEW ENLARGED
X–X VIEW OF SLOT

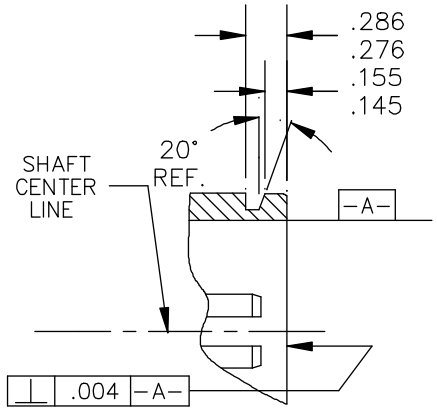

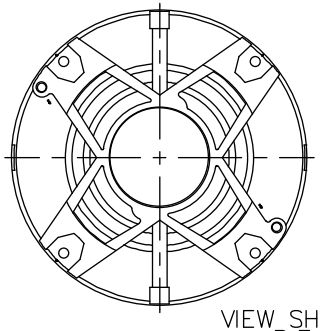

VIEW SHOWING
P.E.
VENTILATION
OPENINGS

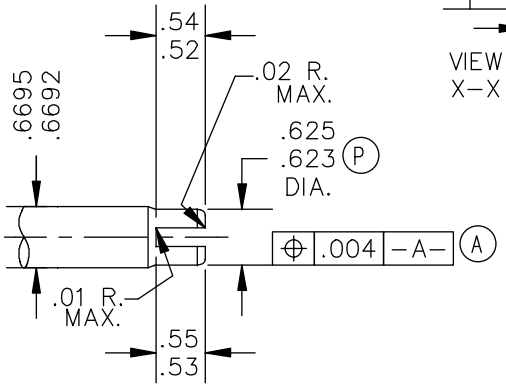

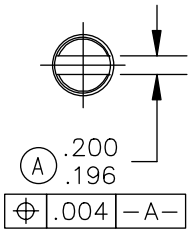

1	KH	32	48Y	7.69	3.55	4.28
P	TYPE	RBC SIZE	NEMA FR	C	L	M

NO.	REVISION	BY & DATE	CHK
01	CHANGED CONCENTRICITY TO POSITION ON GD&T	UD 10/23/13	PKG
	SPECAL PER CUST REQ.		

TOLERANCES UNLESS SPECIFIED	
DEC.	INCHES
.X	±0.1
.XX	±0.02
.XXX	±0.005
.XXXX	±0.0005
ANG	±1.0

REGAL BELOIT **REGAL-BELOIT CORPORATION**

TITLE: OUTLINE
CARBONATOR PUMP–DRIP PROOF –RESIL. BASE

MAT'L.
FINISH
CAD FILE 52A113159
RFP
DIST

DRAWN	PVR 10/17/13
CHK	PKG 10/17/13
APPD	
SCALE	1=1
REF	
FMF	
PREV	

SIZE	DRAWING NO.	REV.
A	52A113159	01

THIS DRAWING IN DESIGN AND DETAIL IS OUR PROPERTY AND MUST NOT BE USED EXCEPT IN CONNECTION WITH OUR WORK ALL RIGHTS OF DESIGN AND INVENTION ARE RESERVED
THIS IS AN ELECTRONICALLY GENERATED DOCUMENT – DO NOT SCALE THIS PRINT

12/9/2013 12:21:08 AM - Converted by Connexus

THIRD ANGLE PROJECTION

REVISIONS			
REV.	DESCRIPTION	DATE	APPROVED
6	UPDATED FORMAT	12/01/05	MAM

EITHER ROTATION-SINGLE VOLTAGE-TYPE KC OR KH-WITH THERMAL PROTECTOR

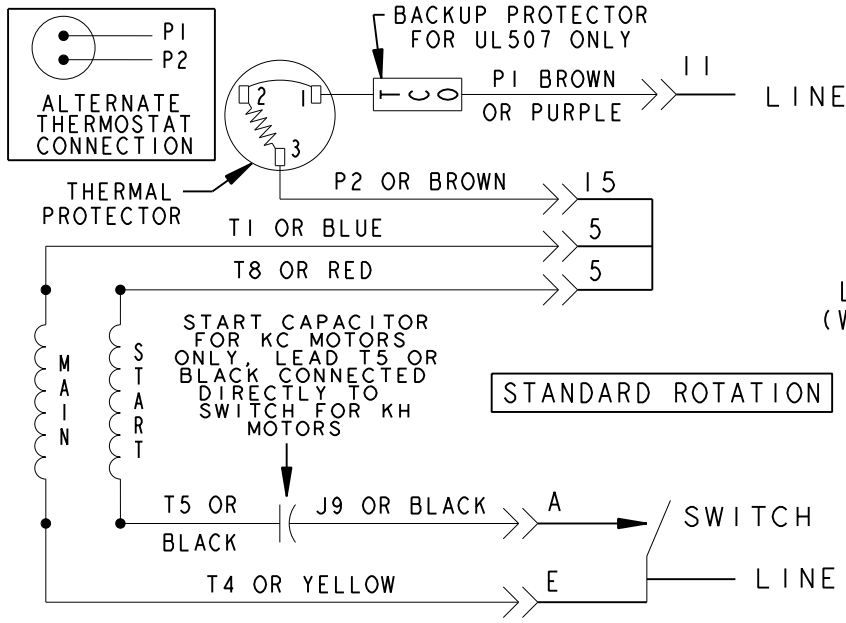

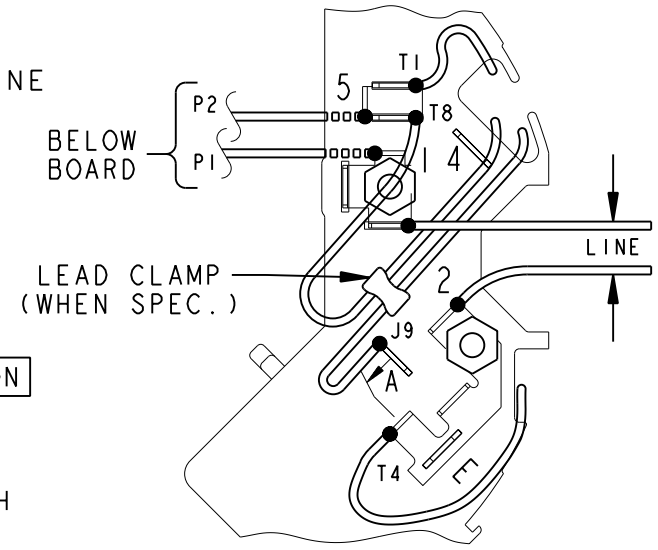

SWITCH BOARD CONNECTION

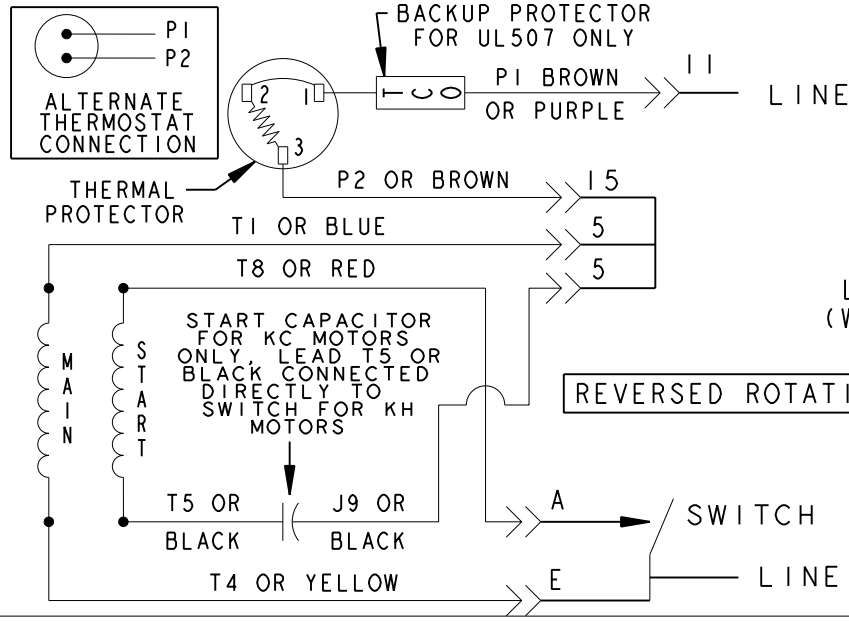

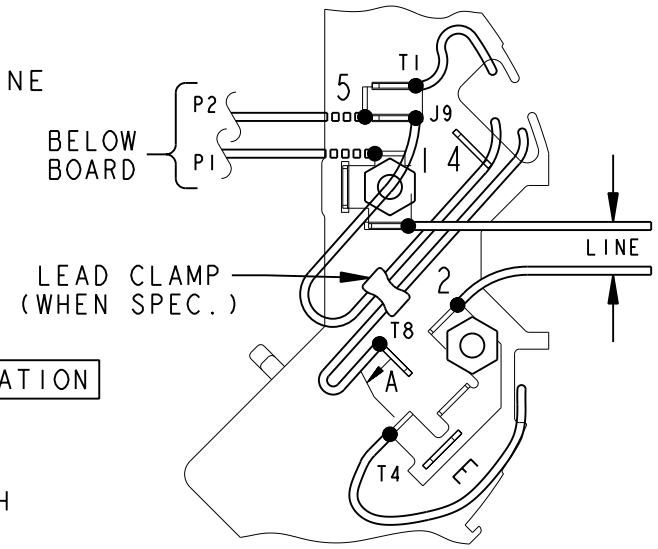

SWITCH BOARD CONNECTION

NOTE #1 - TO REVERSE ROTATION INTERTCHANGE RED (T8) AND BLACK (J9-KC OR T5-KH) LEADS.
NOTE #2 - WHEN MORE THAN ONE CAPACITOR IS USED CONNECT IN PARALLEL.

SWITCH (C) - 115D958AB	REF. DIAG. - 121A851	CONN. LABEL - 52X332048

SIGNATURES		DATE
MODEL	M.D.PAPE	06/29/87
DETAIL	.	.
CHECKED	.	.
ENGRG	.	.
MFG	.	.
QUALITY	.	.
ISSUED	M.D.P.	03/08/00

FOR ADDITIONAL INFO REFER TO:
APPLIED PRACTICES .
DIMENSIONS ARE IN INCHES
MATERIAL .
SOLID MODEL: 52A105379AA

REGAL BELOIT — REGAL-BELOIT CORPORATION

TITLE **CONNECTION DIAGRAM**

.

FMF - 30 FR SWITCH REDESIGN

SIZE	DRAWING	REV
A	52A105379AA	6

SCALE: 1.000 | REF. No: . | SHEET 1 of 1

SHEET 1 | REV 6 | 52A105379AA | DRAWING NO. | SIZE A