D25 3 - 10%

2.5m³/h - 3 - 10%
9 GPM - 1:33 - 1:10
0.3 - 6 bar
4.3 - 85 psi

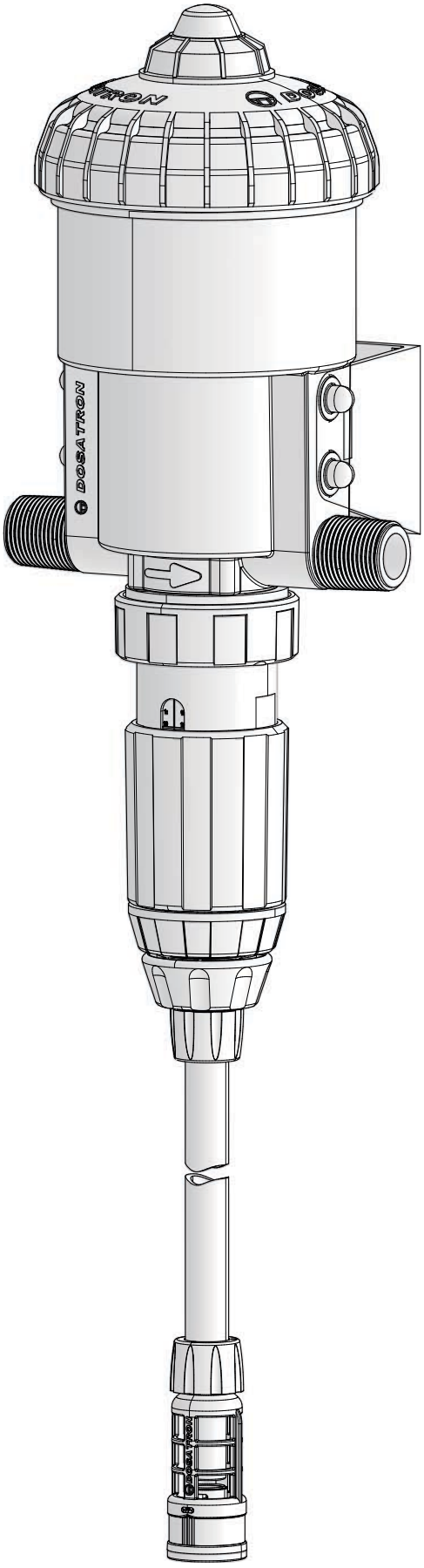

© DOSATRON INTERNATIONAL S.A.S. 2020
D25 3 - 10%/0120/D1

D25 3 - 10%

2.5m³/h - 3 - 10%
9 GPM - 1:33 - 1:10
0.3 - 6 bar
4.3 - 85 psi

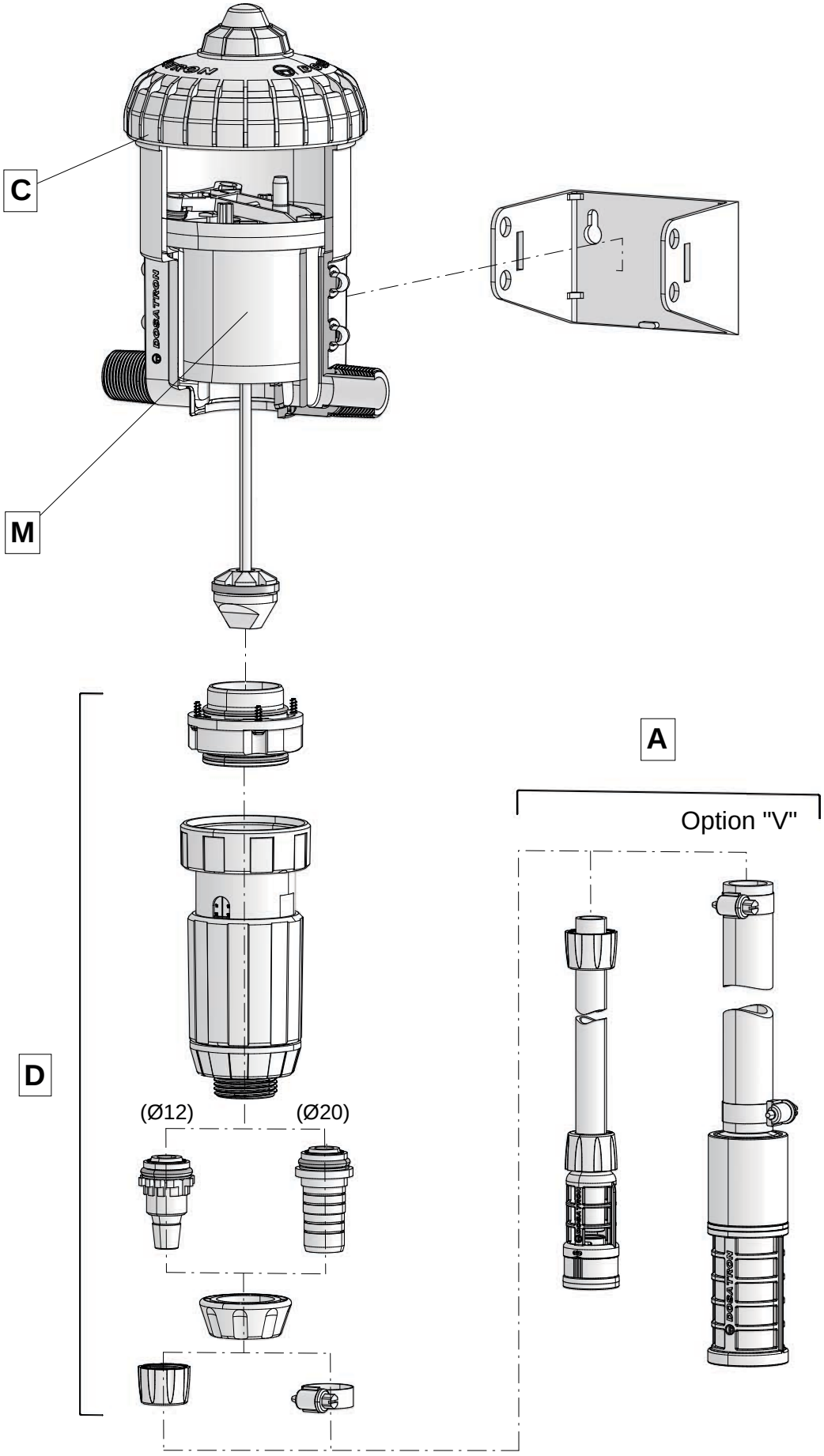

© DOSATRON INTERNATIONAL S.A.S. 2020
D25 3 - 10%/0120/D2

D25 3 - 10%

2.5m³/h - 3 - 10%
9 GPM - 1:33 - 1:10
0.3 - 6 bar
4.3 - 85 psi

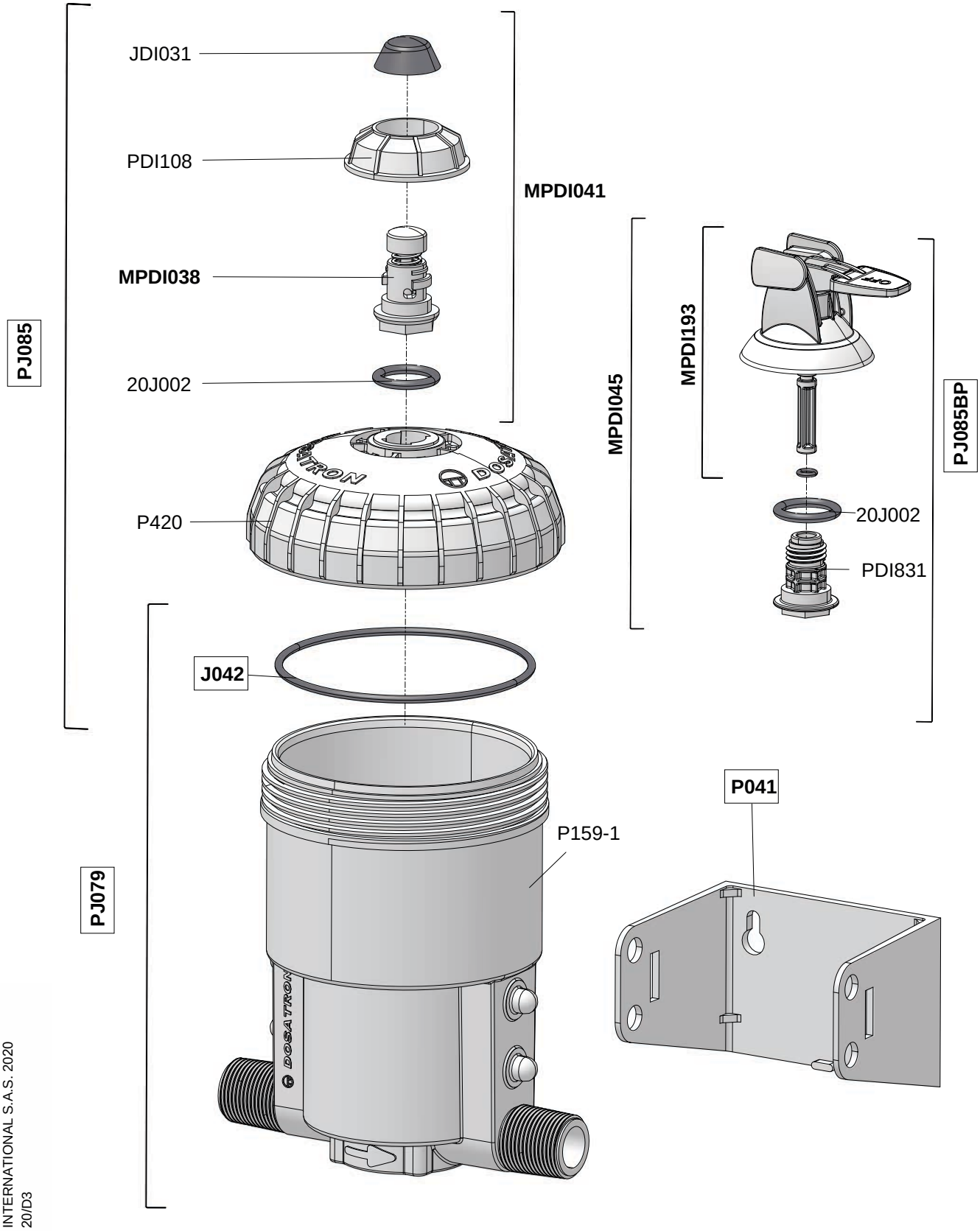

© DOSATRON INTERNATIONAL S.A.S. 2020
D25 3 - 10%/0120/D3

C

D25 3 - 10%

2.5m³/h - 3 - 10%
9 GPM - 1:33 - 1:10
0.3 - 6 bar
4.3 - 85 psi

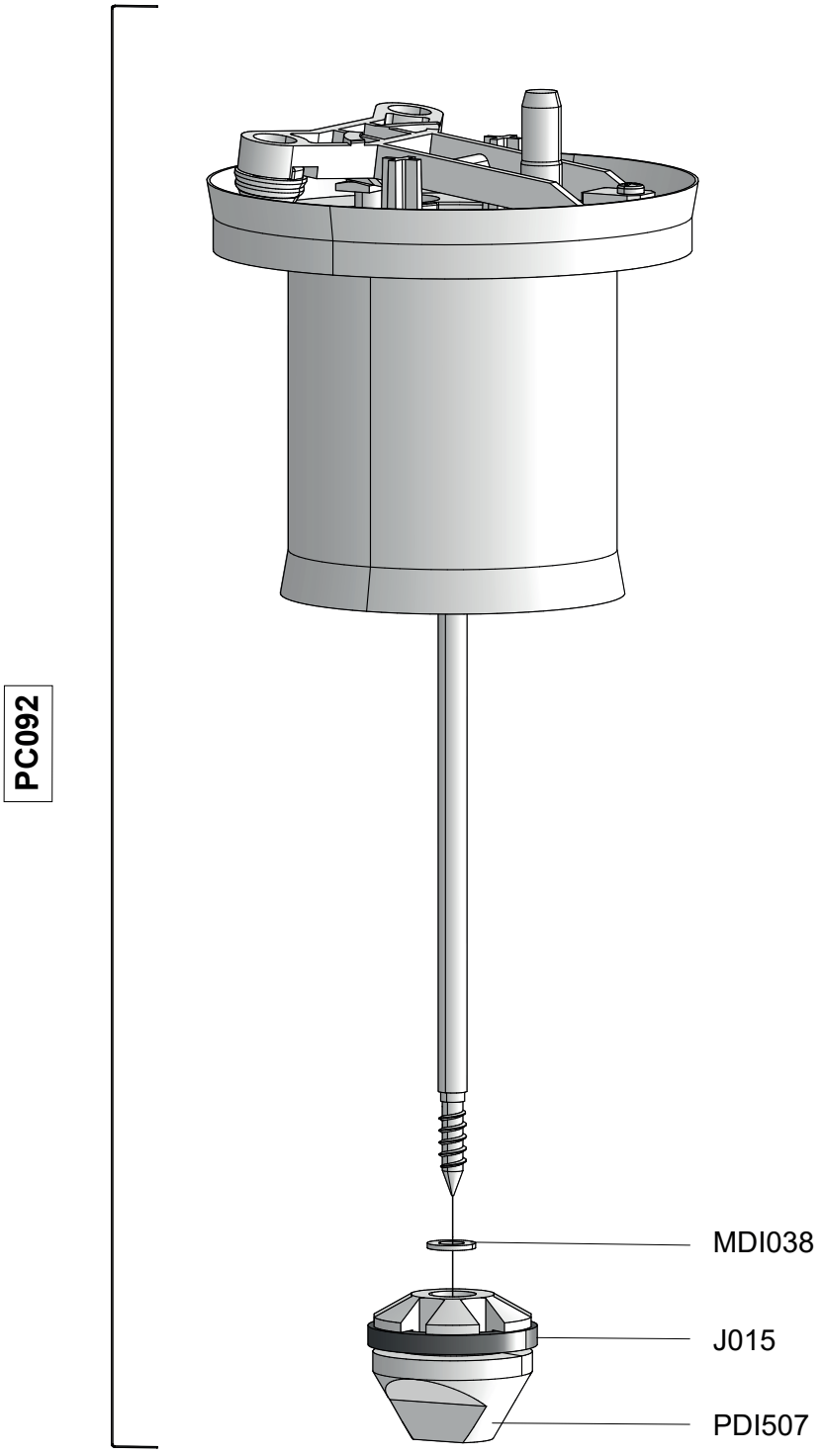

© DOSATRON INTERNATIONAL S.A.S. 2019
D25 3 - 10%/1219/D4

M

D25 3 - 10%

2.5m³/h - 3 - 10%
9 GPM - 1:33 - 1:10
0.3 - 6 bar
4.3 - 85 psi

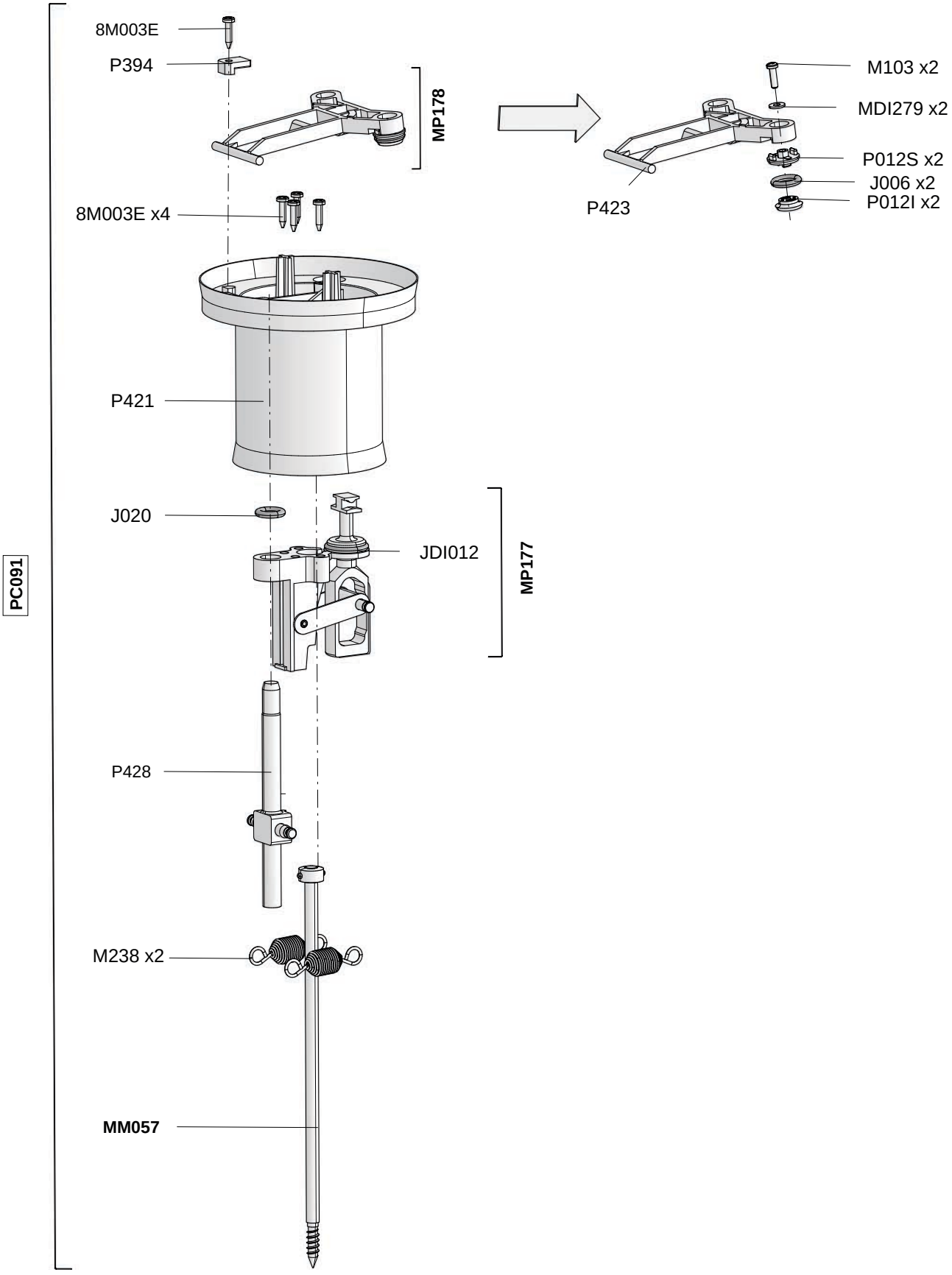

© DOSATRON INTERNATIONAL S.A.S. 2020
D25 3 - 10%/0120/D5

M

D25 3 - 10%

2.5m³/h - 3 - 10%
9 GPM - 1:33 - 1:10
0.3 - 6 bar
4.3 - 85 psi

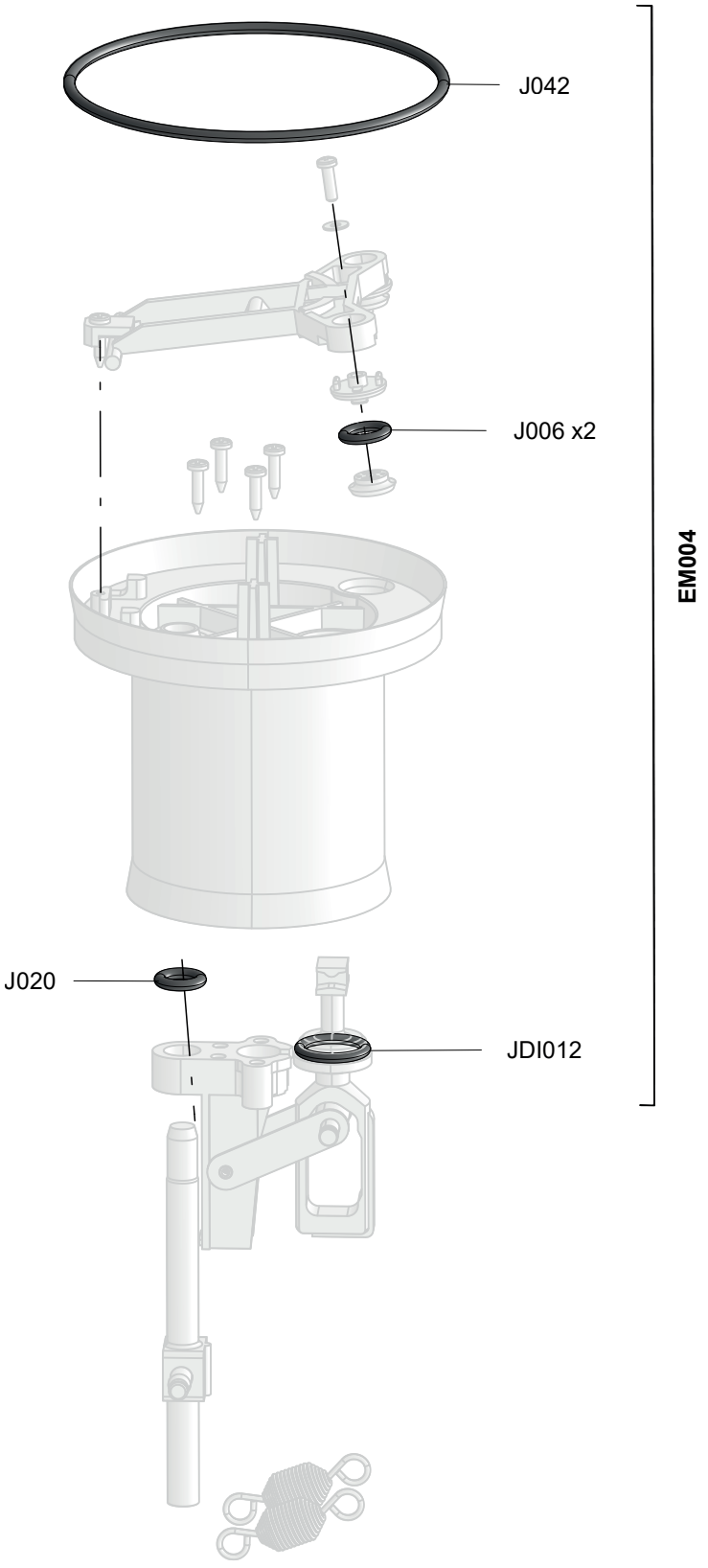

© DOSATRON INTERNATIONAL S.A.S. 2020
D25 3 - 10%/0120/D6

M

D25 3 - 10%

2.5m³/h - 3 - 10%
9 GPM - 1:33 - 1:10
0.3 - 6 bar
4.3 - 85 psi

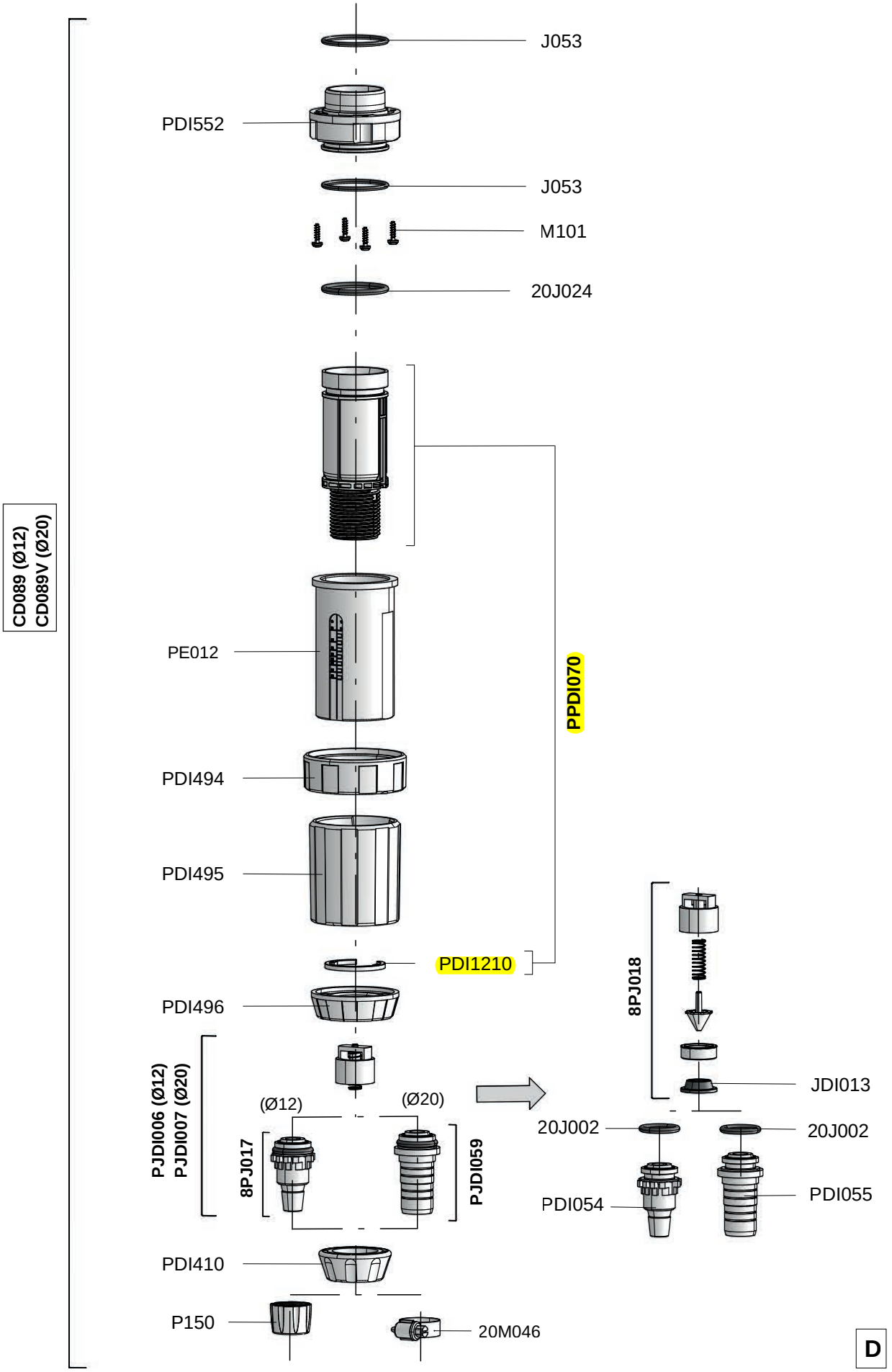

© DOSATRON INTERNATIONAL S.A.S. 2020
D25 3 - 10%/0120/D7

D

D25 3 - 10%

2.5m³/h - 3 - 10%
9 GPM - 1:33 - 1:10
0.3 - 6 bar
4.3 - 85 psi

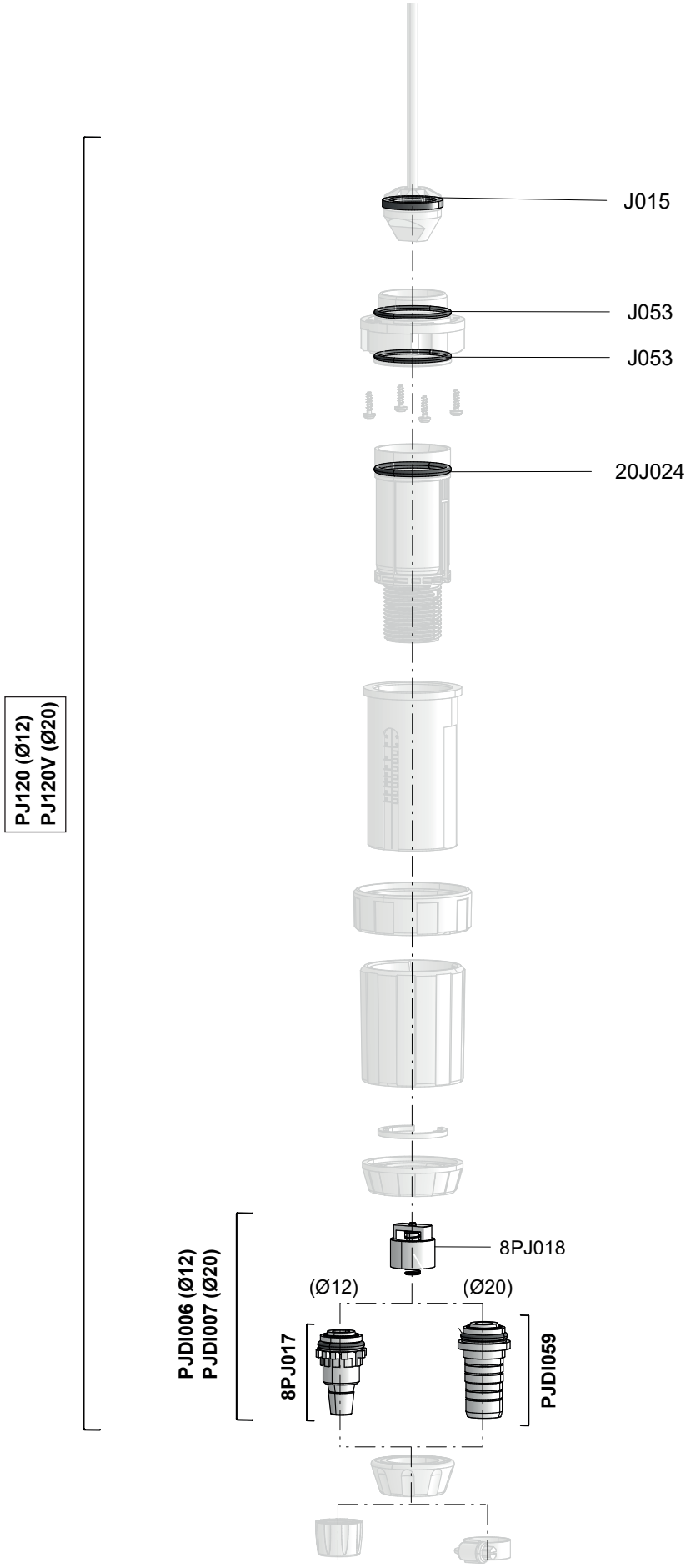

© DOSATRON INTERNATIONAL S.A.S. 2020
D25 3 - 10%/0120/D8

D

D25 3 - 10%

2.5m³/h - 3 - 10%
9 GPM - 1:33 - 1:10
0.3 - 6 bar
4.3 - 85 psi

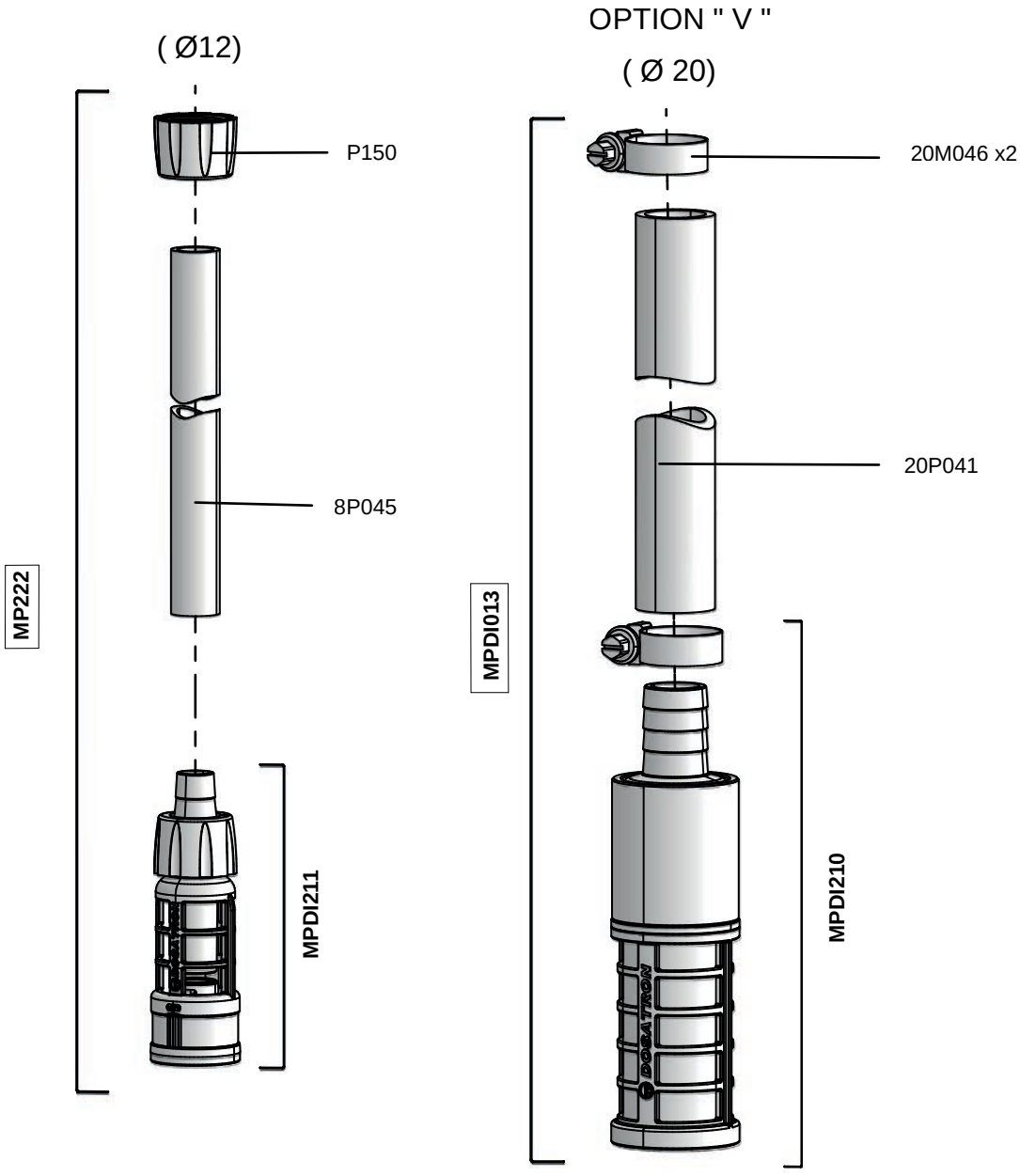

© DOSATRON INTERNATIONAL S.A.S. 2020
D25 3 - 10%/0120/D9

A