

Schematic diagram

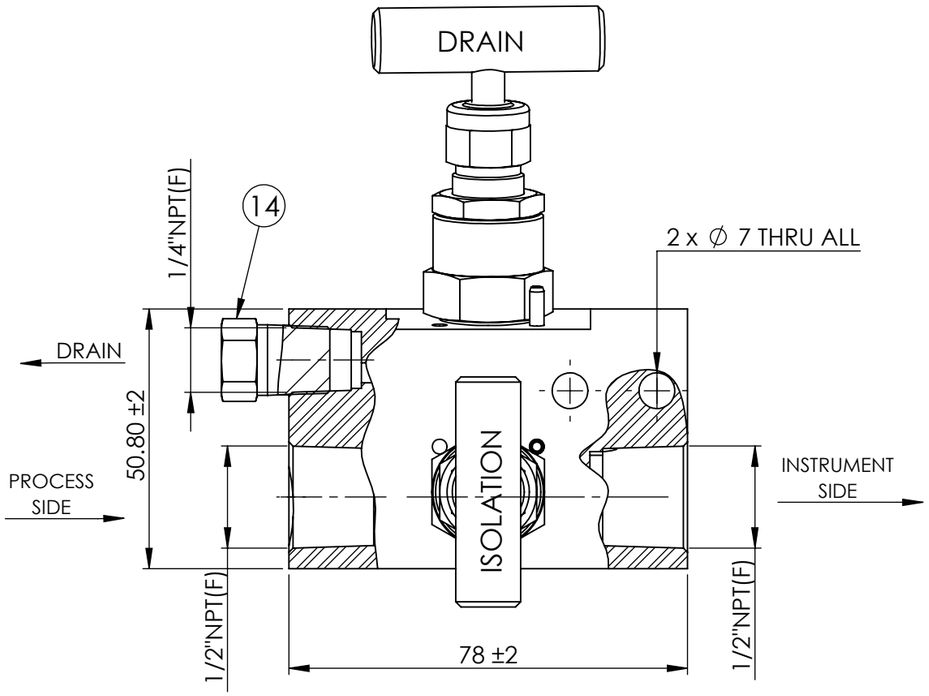

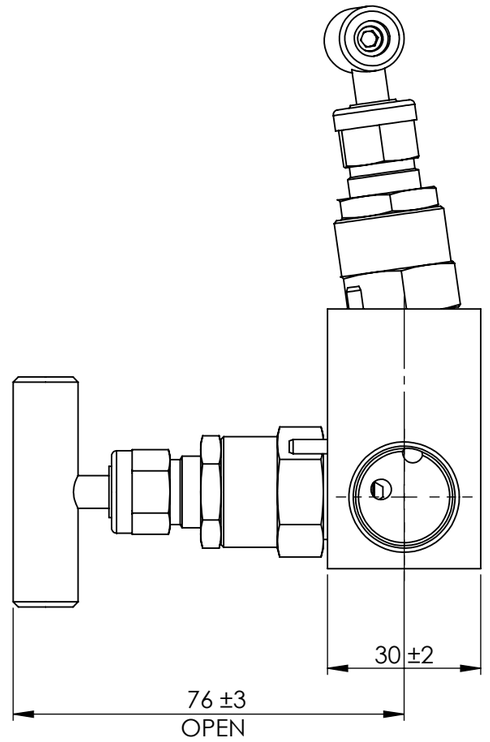

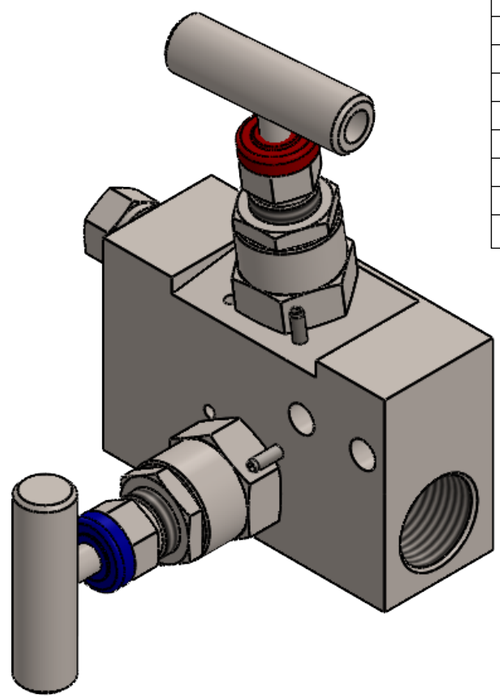

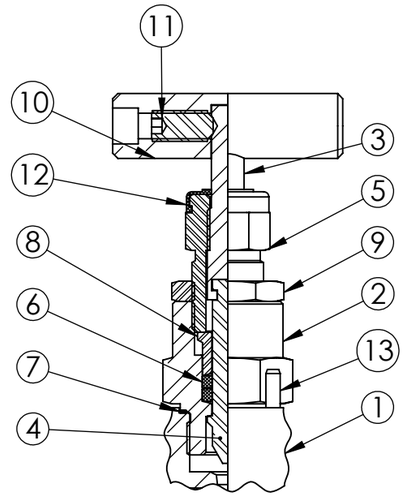

BONNET ASSEMBLY

ITEM NO.	SW-Title(Title)	QTY.	Material
1	BODY	1	SS 316
2	BONNET	1	SS 316
3	UPPER STEM	1	SS 316
4	LOWER STEM	1	SS 316
5	BONNET PUSHER	1	SS 316
6	PACKING	2	PTFE
7	BONNET SEAL	1	SS 316
8	GLAND	1	SS 316
9	CHECK NUT	1	SS 316
10	HANDLE	1	SS 316
11	GRUB SCREW	1	SS
12	DUST CAP	1	PLASTIC
13	STOPPER PIN	1	SS 316
14	MALE PLUG	1	SS 316

SPECIFICATION :

VALVE TYPE :- REMOTE MOUNTING STATIC PRESSURE,
2 VALVE INSTRUMENT MANIFOLD,
MAX. WORKING PRESSURE :- 6000 PSIG @room temp.
PROCESS CONNECTION :- 1/2"NPT(F),
INSTRUMENT CONNECTION :- 1/2" NPT(F),
DRAIN CONNECTION :- 1/4" NPT(F),
TEMPERATURE RATING :- PTFE (232°C),
WEIGHT (SS 316) : 1145.41 GMS.

REV	DATE	DESCRIPTION

DRN	N.H.P 09-01-21	
CHK	A.M.P 09-01-21	
APRD	D.H.S 09-01-21	

DIMENSIONS : MM
SCALE : NTS
PROJECTION :
MATERIAL : AS PER BOM/SO.

PRODUCT NAME: 2 VALVE MANIFOLD
SIZE: 1/2"NPT(F) x 1/2"NPT(F),1/4"NPT(F) DRAIN
PART/MODLE NO: C2VIM-22
SHEET 1/1
DRAWING NO: C2VIM-22
REV 00

Notes : Dimension for reference only and are subject to change.

COMFIT & VALVES PVT.LTD.
Website : www.com-fit.com

THIS DOCUMENT IS PROPERTY OF COMFIT & VALVES PVT. LTD. NANDASAN AND IS NOT BE COPIED OR USED WITHOUT PERMISSION